KINTEK

READY, ALWAYS.

GENERAL CATALOGUE

04-2026

KINTEK
READY, ALWAYS.

The **Kintek Group** is one of the leading groups in Italy in the production of tool holders for lathes and machining centers, offering a wide range of solutions for CNC machines and related accessories.

This catalog provides a comprehensive overview of the combined offerings of Kintek S.p.A. and Gait S.r.l., designed to meet a wide range of applications. Each product results from a meticulous design and manufacturing process, paying close attention to details and market requirements, aiming to ensure high performance and long-lasting durability.

This collaboration marks a significant strategic evolution, allowing the integration of expertise and experience to offer even more complete solutions and services in the field of machine tool equipment and accessories.

For nearly **40 years**, Kintek has been committed to providing high-quality and innovative products, anticipating market demands through advanced technologies and highly specialized services.

The acquisition of Gait, a company historically rooted in the Emilia region and a benchmark in the Made in Italy mechanical sector since 1960, has enabled an expansion of the product portfolio, introducing solutions known for their excellence and reliability.

The company philosophy is based on essential principles such as quality, innovation, sustainability, and service.

Quality is the foundation of every proposed solution, supported by the use of cutting-edge technologies and rigorous production processes certified according to international standards. Continuous research in innovation translates into ongoing investments in state-of-the-art machinery and staff training.

The catalog is structured for easy consultation, providing detailed information on the products, their applications, and the materials used. Additionally, a team of experts is available to offer support and advice in selecting the most suitable solutions for specific needs, contributing to the optimization of production processes.

We hope this catalog will serve as a useful tool for your daily activities, and we invite you to contact the company for any information or requests.

Thank you for choosing Kintek and Gait. **READY, ALWAYS.**

MILLING

HSK A+C chucks DIN 69893-1 p. 6

HSK E chucks DIN 69893-5 p. 7

HSK F chucks DIN 69893-6 p. 7

SK chucks DIN 69871 p. 7

BT chucks JIS-B 6339 p. 9

Double contact toolholders **DK** p. 10

Polygonal toolholders and turning tools for milling DIN ISO 26623-1 p. 10

Shrink fit chucks p. 11

Hydro-expansion chucks for tools with cylyndrical shank p. 12

VAR. modular system p. 12

NT chucks **DIN2080** p. 12

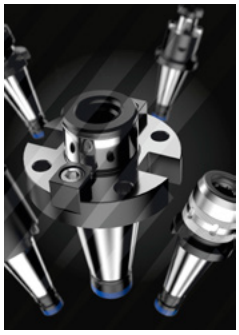

Boring system / Adjustable boring heads p. 13

Vices / Zero point p. 14

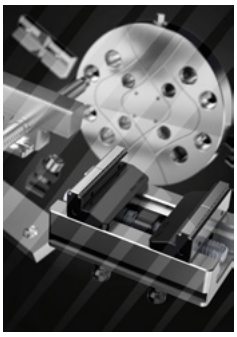

TURNING

HSK-T toolholders and turning tools DIN ISO 12164-3 p. 14

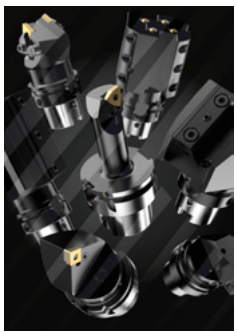

Polygonal toolholders and turning tools for turning DIN ISO 26623-1 p. 16

Driven tools and **toolholders** for CNC lathes p. 17

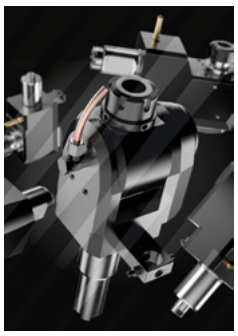

Driven tools **Fast In** p. 17

VDI toolholders for CNC lathes DIN 6988 p. 17

Live center p. 19

Knurls p. 19

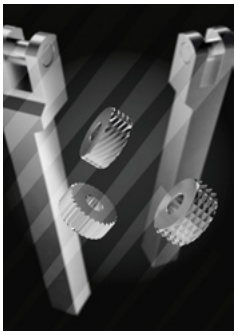

Broaches p. 19

ACCESSORIES AND SPARE PARTS

Accessories and Spare Parts p. 20

Control **pins** p. 29

MILLING

HSK A+C chucks DIN 69893-1

Technical data p.31

End mill holders WELDON

p. 34

End mill holders WELDON long

p. 36

End mill holders WELDON with coolant channels

p. 37

End mill holders for DIN 1835-E shanks

p. 37

Indexable drill holders

p. 38

Face mill holders-tenons drive

p. 39

Combi-shell mill adaptors

p. 41

End mill holders for milling cutters with threaded shanks

p. 42

Morse taper adaptors for drills

p. 43

Morse taper mill adapters with internal coolant

p. 45

Tool extensions / reducers HSK A+C / HSK

p. 44

Reducers HSK A+C / polygonal

p. 44

ER collet chucks - high precision

p. 45

ER mini collet chucks - high speed line

p. 46

ER collet chucks with hexagonal nut

p. 47

ER collet chucks

p. 48

ER collet chucks - high speed line

p. 50

Milling chuck

p. 51

NC-drill chucks for left and right rotation

p. 52

Shanks for drill chucks

p. 52

End mill holders WELDON - high speed line

p. 53

End mill holders WELDON long - high speed line

p. 53

ER mini collet chucks extra thin - high speed line

p. 54

Tension and compression tapping heads

p. 55

Blank toolholders with soft shank

p. 55

Coolant supply unit

p. 73

Key for coolant supply unit

p. 73

Shrink fit chucks

p. 187

Hydro-expansion chucks for tools with cylyndrical shank

p. 198

VAR. modular system

p. 206

Boring system

p. 232

HSK-T toolholders and turning tools DIN ISO 12164-3

p. 258

Control pins

p. 762

MILLING

HSK E chucks DIN 69893-5

Technical data p.31

End mill holders WELDON - high speed line

p. 59

Face mill holders-tenons drive

p. 60

Blank toolholders with soft shank

p. 60

ER mini collet chucks - high speed line

p. 61

ER collet chucks - high speed line

p. 62

Coolant supply unit

p. 73

Key for coolant supply unit

p. 73

HSK F chucks DIN 69893-6

Technical data p.31

ER mini collet chucks - high speed line

p. 68

End mill holders WELDON - high speed line

p. 68

ER collet chucks - high speed line

p. 69

Blanck toolholders with soft shank

p. 70

Morse taper mill adapters with internal coolant

p. 70

Face mill holders-tenons drive

p. 71

Combi-shell mill adaptors

p. 72

End mill holders for milling cutters with threaded shanks

p. 72

Coolant supply unit

p. 73

Key for coolant supply unit

p. 73

Control pins

p. 763

SK chucks DIN 69871

Technical data p.75

Short type end mill holders

p. 77

WELDON end mill holders

p. 78

WELDON end mill holders - high speed line

p. 81

WELDON end mill holders - long series - high speed line

p. 81

WELDON end mill holders - short series with coolant channels

p. 82

WHISTLE NOTCH end mill holders

p. 83

Indexable drill holders

p. 84

Face mill holders - tenons drive

p. 85

MILLING

SK chucks DIN 69871

Combi-shell mill holders

p. 87

Mill holders with feather key

p. 88

Face mill holder for face milling cutters

p. 88

End mill holders for milling cutters with threaded shanks

p. 89

Indexable morse taper drill holders

p. 90

End mill holders for morse taper cutters

p. 90

Combi morse taper holders for drills and milling cutters

p. 91

Combi morse taper holders for drills and milling cutters - long series

p. 92

Adapter from DIN69871(SK) to MAS403BT/ SK/DIN2080

p. 93

Adapter from DIN69871(SK) to DIN69893-1 (HSK A+C)

p. 93

Adapter from DIN69871(SK) to ISO26623-1 (polygonal)

p. 94

ER collet chuck with mini nut

p. 95

ER collet chuck with hexagonal nut

p. 98

ER collet chucks - high precision

p. 97

ER collet chucks

p. 98

ER collet chucks - high speed line

p. 101

DIN6388 (EOC) collet chucks

p. 102

ER short collet chuck with inner nut

p. 102

ER collet chucks - high speed line

p. 103

ER collet chucks - flange w/out lugs

p. 104

Milling chucks

p. 105

Milling chucks - high speed line

p. 106

Drill chucks adapters

p. 107

Drill chucks - right spin

p. 108

Drill chucks - left and right spin

p. 108

Tension/ compression quick change tapping heads

p. 109

Solid tapping heads

p. 110

Blank bars

p. 111

Double contact toolholders DK

p. 148

Shrink fit chucks

p. 178

Hydro-expansion chucks for tools with cylyndrical shank

p. 197

VAR. modular system

p. 205

Boring system

p. 231

Control pins

p. 761

MILLING

BT chucks JIS-B 6339

Technical data p.113

Short type WELDON end mill holders

p. 115

WELDON end mill holders

p. 116

WELDON end mill holders - high speed line

p. 119

WELDON end mill holders - long series - high speed line

p. 119

WELDON end mill holders - short series with coolant channels

p. 120

WHISTLE NOTCH end mill holders

p. 121

Indexable drill holders

p. 122

Face mill holders - tenons drive

p. 123

Combi-shell mill holders

p. 125

Mill holders with feather key

p. 126

Face mill holder for face milling cutters

p. 126

End mill holders for milling cutters with threaded shanks

p. 127

Indexable morse taper drill holders

p. 128

End mill holders for morse taper cutters

p. 128

Combi morse taper holders for drills and milling cutters

p. 129

Combi morse taper holders for drills and milling cutters

p. 129

Adapter from BT to NT/SK/BT

p. 130

Adapter from BT to DIN69893-1 (HSK A+C)

p. 130

Adapter from BT to ISO26623-1 (polygonal)

p. 131

ER collet chuck with mini nut

p. 132

ER collet chuck with hexagonal nut

p. 134

ER collet chucks - high precision

p. 135

ER collet chucks

p. 136

ER collet chucks - high speed line

p. 139

DIN6388 (EOC) collet chucks

p. 140

ER short collet chuck with inner nut

p. 141

Milling chuck

p. 142

Milling chuck - high speed line

p. 143

Tension/ compression quick change tapping heads

p. 144

Solid tapping heads

p. 145

Drill chucks adapters

p. 145

Drill chucks - right spin

p. 146

Drill chucks left and right spin drill chucks left and right spin

p. 146

Blank bars

p. 147

Double contact toolholders DK

p. 148

Shrink fit chucks

p. 183

MILLING

BT chucks JIS-B 6339

Hydro-expansion chucks for tools with cylyndrical shank

p. 196

VAR. modular system

p. 205

Boring system

p. 230

Control pins

p. 761

Double contact toolholders **DK**

Technical data p.149

Double contact ER collet chucks - high precision

p. 151

Double contact ER collet chucks - high precision

p. 152

Double contact ER collet chucks with hexagonal nut

p. 153

Double contact ER collet chucks

p. 154

Double contact ER collet chucks with hexagonal nut

p. 155

ER collet chucks

p. 156

Milling chuck

p. 157

Milling chuck

p. 158

Face mill holders - tenons drive

p. 159

Face mill holders - tenons drive

p. 160

Double contact WELDON end mill holders

p. 161

Double contact WELDON end mill holders

p. 162

Shrink fit chucks

p. 178

Control pins

p. 762

Polygonal toolholders and turning tools DIN ISO 26623-1

Technical data p.165

Polygonal end mill holder WELDON

p. 166

Polygonal indexable drill holder

p. 167

Polygonal face mill holder

p. 168

Milling cutter arbors for screw-on type milling cutters

p. 169

Polygonal morse taper adaptors for drills

p. 169

Polygonal reduction

p. 170

Polygonal extensions

p. 170

ER mini collet chuck

p. 171

MILLING

Polygonal toolholders and turning tools DIN ISO 26623-1

Polygonal ER collet chuck
p. 172

Polygonal high torque milling chuck
p. 173

Polygonal tapping head
p. 174

Polygonal blank toolholder
p. 175

Extension adaptor with quick change polygonal shank according
p. 176

Reduction adaptor with quick change polygonal shank according
p. 176

Coolant supply unit
p. 286

Key for coolant supply unit
p. 286

Shrink fit chucks

Shrink fit chucks ISO 40 DIN 69871 AD/B
p. 179

Shrink fit chucks ISO 40 DIN 69871 AD/B
p. 180

Shrink fit chucks with resealable coolant duct holes ISO 40 DIN 69871 AD/B
p. 181

Shrink fit chucks with resealable coolant duct holes ISO 50 DIN 69871 AD/B
p. 182

Shrink fit chucks MAS BT40 tipo AD/B
p. 183

Shrink fit chucks MAS BT40 tipo AD/B
p. 183

Double contact shrink fit chucks with resealable coolant duct holes MAS BT40 tipo AD/B
p. 184

Shrink fit chucks HSK 63 DIN 69893 tipo A
p. 185

Shrink fit chucks with resealable coolant duct holes HSK63 DIN 69893 tipo A
p. 186

Shrink fit chucks HSK 63 DIN 69893 tipo A
p. 187

Shrink fit chucks HSK 63 DIN 69893 tipo A
p. 188

Shrink fit chucks with resealable coolant duct holes polygonal DIN 26623-1
p. 189

Shrink fit chucks with resealable coolant duct holes polygonal DIN 26623-1
p. 191

Shrink Unit
p. 192

Hydro-expansion chucks for tools with cylyndrical shank

Technical data p.195

Hydro-expansion chucks for tools with cylyndrical shank
p. 196

Hydro-expansion chucks for tools with cylyndrical shank
p. 197

Hydro-expansion chucks for tools with cylyndrical shank
p. 198

Sealed cylindrical collets
p. 199

MILLING

Hydro-expansion chucks for tools with cylyndrical shank

Collets for hydraulic chucks

p. 199

Hydro-expansion chucks for tools with cylyndrical shank

p. 200

Hydro-expansion chucks for tools with cylyndrical shank

p. 201

Hydro-expansion chucks for tools with cylyndrical shank

p. 201

Hydro-expansion chucks for tools with cylyndrical shank high clamping force

p. 202

Hydro-expansion chucks for tools with cylyndrical shank high clamping force

p. 202

Hydro-expansion chucks for tools with cylyndrical shank high clamping force

p. 203

VAR. modular system

Base taper shanks

p. 205

Base taper shanks

p. 205

Base taper shanks

p. 206

ER collet chuck adapters

p. 206

Mill holders - tenons drive adapters

p. 207

WELDON end mill holders adapters

p. 208

Extensions

p. 209

Reducers

p. 209

NT chucks **DIN2080**

Technical data p.211

Short type end mill holders

p. 212

WELDON end mill holders

p. 213

Face mill holders tenons drive

p. 214

Combi-shell mill holders

p. 215

Mill holders with feather key

p. 216

Face mill holder for face milling cutters

p. 217

Centering device for inserts milling cutters

p. 217

Indexable morse taper drill holders

p. 218

End mill holders for morse taper cutters

p. 218

Combi morse taper holders for drills and milling cutters

p. 219

Combi morse taper holders for drills and milling cutters - long type

p. 219

Adapter from NT to NT/SK/BT

p. 220

MILLING

NT chucks **DIN2080**

Adapter/ reducers from NT to NT

p. 220

ER collet chuck with mini nut

p. 221

ER collet chuck with hexagonal nut

p. 221

ER collet chucks

p. 222

DIN 6388 collet chucks

p. 224

Milling chucks

p. 224

Drill chucks adapters

p. 225

Drill chucks - right spin

p. 225

Drill chucks - left and right spin

p. 226

Tension/ compression tapping heads

p. 226

Solid tapping heads

p. 227

Blank bars

p. 227

Control pins

p. 761

Boring system / Adjustable boring heads

Technical data p.229

Base holder for boring heads - MAS403/BT-AD

p. 230

Base holder for boring heads - DIN69871-AD (SK)

p. 231

Base holder for boring heads - DIN69893/A (HSK)

p. 232

Extensions for boring heads

p. 232

Reducers for boring heads

p. 233

Double insert boring heads - incl. insert carriers

p. 234

Finishing boring heads - incl. insert carrier

p. 235

Insert carriers for double insert boring heads

p. 236

Insert carrier for finishing boring head
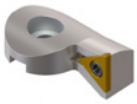
p. 236

Adjustable boring heads

p. 238

Insert carriers

p. 239

MILLING

Vices / Zero point

Technical data p.243

5-axis centring vice MRC 48x78
p. 244

5-axis centring vice MRC 78x110
p. 245

5-axis centring vice MRC 126x180
p. 246

Dual clamping vice MRCD 78
p. 247

Dual clamping vice MRCD 126
p. 248

Precision CNC machine centring vice MRCH 125x330
p. 249

Precision CNC machine vice MRF 125x428 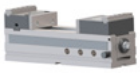
p. 250

Zero point ZK1 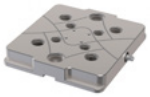
p. 251

Zero point ZK2 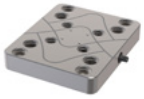
p. 252

Zero point ZK3
p. 253

Zero point ZK4x195 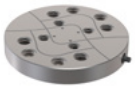
p. 254

Pair jaws
p. 255

Centring pins
p. 255

Screw
p. 255

Accessories
p. 256

TURNING

HSK-T toolholders and turning tools DIN ISO 12164-3

Technical data p.259

HSK-T external turning tools - DCM12DDM15
p. 262

HSK-T external turning tools - DDMNL
p. 262

HSK-T external turning tools - PCLN
p. 262

HSK-T external turning tools - PDJN
p. 263

HSK-T external turning tools - PCMNR
p. 263

HSK-T external turning tools - PDNNR
p. 263

HSK-T external turning tools - PWLN
p. 264

HSK-T external turning tools - SCLC
p. 264

HSK-T external turning tools - SDJC
p. 264

HSK-T external turning tools - SDNCN
p. 265

HSK-T external turning tools - SVVCN
p. 265

HSK-T external turning tools - SVHC
p. 265

TURNING

HSK-T toolholders and turning tools DIN ISO 12164-3

HSK-T external turning tools - SVJC

p. 266

HSK-T external turning tools

p. 266

HSK-T external turning tools for threading - THE

p. 266

HSK-T internal turning tools - PCLN

p. 267

HSK-T internal turning tools - T - PDUN

p. 267

HSK-T internal turning tools - PWLN

p. 267

HSK-T internal turning tools - SCLC

p. 268

HSK-T internal turning tools - SDUC

p. 268

HSK-T internal turning tools - SVQB

p. 268

HSK-T internal turning tools - THE

p. 269

Radial toolholder - TRAD

p. 269

Axial toolholder - TAX

p. 269

Axial toolholder - TAD

p. 270

Axial toolholder - TA/TS

p. 270

Axial toolholder - TA/IC

p. 270

Axial toolholder - TAT

p. 271

Axial toolholder - TAT/IC

p. 271

Axial toolholder - TAQ

p. 271

Radial toolholder - TRD

p. 272

Axial toolholder for cut off tools

p. 272

Axial toolholder for cut off tools - IC

p. 272

45° toolholder - TARD

p. 273

45° toolholder - TARD/IC

p. 273

45° toolholder - TAR

p. 273

Axial boring bar holder

p. 274

Axial holder for indexable insert drills with internal coolant supply

p. 275

Adapter with HSK attachment

p. 275

Protective cap

p. 276

Blank toolholder for special tools

p. 276

TURNING

Polygonal toolholders and turning tools DIN ISO 26623-1

Technical data p.279

Axial boring bar holder
p. 280

Polygonal flange kit
p. 281

90° polygonal toolholder
p. 282

90° polygonal toolholder /IC
p. 282

Protective cap
p. 283

45° polygonal toolholder - ARD
p. 283

45° polygonal toolholder - ARD/IC
p. 283

45° polygonal toolholder - AR
p. 284

Polygonal radial toolholder
p. 284

Polygonal axial toolholder
p. 284

Polygonal axial toolholder
p. 285

Polygonal axial toolholder for cut off tools
p. 285

Polygonal axial toolholder
p. 285

Coolant supply unit
p. 286

Key for coolant supply unit
p. 286

Toolholder with square shank and with polygonal interface
p. 286

ISO 26623-1 polygonal external turning tools - DCL
p. 290

ISO 26623-1 polygonal external turning tools - DWL
p. 290

ISO 26623-1 polygonal external turning tools - DCM
p. 291

ISO 26623-1 polygonal external turning tools - DDM
p. 291

ISO 26623-1 polygonal external turning tools - PCL
p. 292

ISO 26623-1 polygonal external turning tools - PDJ
p. 292

ISO 26623-1 polygonal external turning tools - PWL
p. 293

ISO 26623-1 polygonal external turning tools - SCL
p. 293

ISO 26623-1 polygonal external turning tools - SDJ
p. 294

ISO 26623-1 polygonal external turning tools - SVH
p. 294

ISO 26623-1 polygonal external turning tools - SVJ
p. 295

ISO 26623-1 polygonal external turning tools - SCM
p. 295

ISO 26623-1 polygonal external turning tools - SVM
p. 296

ISO 26623-1 polygonal external threading tools - THE
p. 296

ISO 26623-1 polygonal internal turning tools - PCL
p. 297

ISO 26623-1 polygonal internal turning tools - PWL
p. 297

ISO 26623-1 polygonal internal turning tools - SCL
p. 298

ISO 26623-1 polygonal internal turning tools - SDU
p. 299

ISO 26623-1 polygonal internal turning tools - SVQ
p. 300

ISO 26623-1 polygonal internal threading tools - THE
p. 300

TURNING

Driven tools and **toolholders** for CNC lathes

Technical data p.312

DRIVEN TOOLS

INDEX OF MACHINES

p. 302

TOOLHOLDERS

INDEX OF MACHINES

p. 360

Driven tools **Fast In**

Technical data p.507

End mill holders for milling cutters with threaded shanks

p. 508

Holders for WELDON type end mill

p. 508

Face mill holders-tenons drive

p. 509

ER collet chuck

p. 509

End mill holders for milling cutters with threaded shanks

p. 510

Holders for WELDON type end mill

p. 510

Face mill holders-tenons drive

p. 511

Blank toolholder with soft shank

p. 511

VDI toolholders for CNC lathes DIN 6988

Technical data p.513

Rectangular blank for special versions - A1

p. 515

Round blank for special versions - A2

p. 515

Radial holder, RH, short - B1

p. 516

Radial holder, RH, short - B1/IC

p. 516

Radial holder, LH, short - B2

p. 517

Radial holder, LH, short - B2/IC

p. 517

Radial holder, upside-down, RH, short - B3

p. 518

Radial holder, upside-down, RH, short - B3/IC

p. 518

Radial holder, upside-down, LH, short - B4

p. 519

Radial holder, upside-down, LH, short - B4/IC

p. 519

Radial holder, RH, long - B5

p. 520

Radial holder, LH, long - B6

p. 520

Radial holder, upside-down, RH, long - B7

p. 521

Radial holder, upside-down, LH, short - B8

p. 521

Axial holder, RH - C1

p. 522

Axial holder, RH - C1/IC

p. 522

TURNING

VDI toolholders for CNC lathes DIN 6988

Axial holder, LH - C2
p. 523

Axial holder, LH - C2/IC
p. 523

Axial holder, upside-down, RH - C3
p. 524

Axial holder, upside-down, RH - C3/IC
p. 524

Axial holder, upside-down, LH - C4
p. 525

Axial holder, upside-down, LH - C4/IC
p. 525

Toolholder with multiple seats - D1 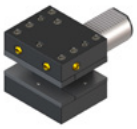
p. 526

Toolholder with multiple seats upside down - D2 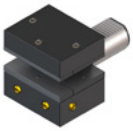
p. 526

Holder for indexable insert drills with internal coolant supply - E1
p. 527

Boring bar holder - E2
p. 528

Boring bar holder - E2 TAG
p. 530

Collet chuck for collets according to DIN 6499/B, ER type - E4
p. 531

Collet chuck for collets according to DIN 6388, EOC type - E3
p. 532

Double boring bar holder, right - E7 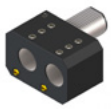
p. 532

Double boring bar holder, left - E8
p. 533

Morse taper holder - F
p. 534

Rotary adjustable bar-stop
p. 535

Damped, adjustable, bar stop
p. 535

Adaptors for drills with internal coolant supply
p. 536

Adaptors for drills with lateral coolant supply
p. 536

Spring bar puller
p. 537

Tension and compression tapping head
p. 538

Toolholder for cut off tools adjustable in height, right - AR
p. 538

Toolholder for cut off tools adjustable in height, right - AR/IC
p. 539

Toolholder for cut off tools adjustable in height, upside-down, left - ALU
p. 539

Toolholder for cut off tools adjustable in height, left - AL
p. 539

Toolholder for cut off tools adjustable in height, left - AL/IC
p. 540

Toolholder for cut off tools adjustable in height, upside-down, right - ARU
p. 540

Broach toolholder
p. 540

Spare parts VDI
p. 542

Blanking plug
p. 548

Cylindrical bar stop
p. 548

Cylindrical revolving bar stop with shock absorber
p. 549

Axial toolholder with polygonal coupling
p. 549

TURNING

Live center

SERIE-K1
Live center with differential load

p. 551

SERIE-MWS60 HP
High precision live center with ring nut

p. 551

SERIE-MWS-IP HP
High precision live center with ring nut and interchangeable point

p. 552

SERIE-MWS/CP
High load live center with ring nut

p. 553

SERIE-MWS/TU
Live center with integral point for tubes

p. 554

SERIE-MWS/RT60
Live center with hard metal point for grinding

p. 554

SERIE-K1 SPEED
High speed live center without ring nut

p. 556

SERIE-K1 SLOW
Low speed live center without ring nut, rotary point and body

p. 557

SERIE-K3
Dead center for CNC lathe
p. 558

SERIE-K4
Hard metal dead center for grinding
p. 563

Live center for chuck application
p. 564

Interchangeable points for SERIE-MWS-IP HP
p. 565

Interchangeable points for SERIE-K1
p. 566

Springs for SERIE-K1

p. 566

Knurls

Square shank knurling-wheel holders

p. 569

Misaligned square shank knurling-wheel hoders

p. 570

Pins for knurling-wheel holders

p. 570

Sintered steel knurling wheels for tracing working

p. 571

Broaches

Straight shank broaching toolholders

p. 573

Reduction for broach seat from 16 to 12 shank

p. 573

Hexagonal broaches

p. 574

Square broaches

p. 575

TORX® broaches

p. 576

TORX PLUS® broaches

p. 576

ACCESSORIES AND SPARE PARTS

Cylyndrical shank

Straight shank ER collet chucks with mini nut

p. 581

Straight shank ER double collet chucks with mini nut

p. 584

Straight shank ER collet chucks with hexagonal nut

p. 585

Straight shank ER collet chucks with standard nut

p. 587

WELDON shank ER collet chucks with standard nut

p. 590

Straight shank ER collet chucks with cooling holes - standard nut

p. 590

Straight shank ER collet chucks with inner nut

p. 591

Shanks for keyless drill chucks

p. 591

Straight shank drill chucks - right spin

p. 592

Straight shank drill chucks - left & right spin

p. 592

Cylindrical shank WELDON reduction sleeves

p. 593

Straight shank tapping cilindric chucks - tension / compression

p. 594

WELDON straight shank tapping chucks - tension / compression

p. 595

WELDON straight shank tapping chucks - without tension / compression

p. 595

DIN 1835 B shanks for milling cutters with threaded shank

p. 596

Extensions for milling cutters with threaded shank

p. 596

Reductions for milling cutters with threaded shank

p. 597

ER collet chucks with threaded shank

p. 597

Trapeze shank DIN 6327

Trapezoidal shank ER collet chucks with mini nut

p. 598

Trapezoidal shank ER collet chucks with exagonal nut

p. 599

Trapezoidal shank ER collet chucks with standard nut

p. 600

DIN 6327 adjustment nuts

p. 601

Shanks for drill chucks DIN 238 / ISO 239 type

p. 601

DIN 6327 adjustable morse taper adapters - "E" type

p. 602

Tension/ compression quick change tapping heads

p. 603

Solid tapping heads

p. 604

ER collet chucks with mini nut

p. 605

Solid tapping heads

p. 605

ACCESSORIES AND SPARE PARTS

Morse taper shank

Technical data p.606

Morse taper shank ER collet chucks with thread - mini nut

p. 607

Morse taper shank ER collet chucks with tenon - mini nut

p. 607

Morse taper shank ER collet chucks with thread - hexagonal nut

p. 608

Morse taper shank ER collet chucks with tenon - hexagonal nut

p. 608

Morse taper shank ER collet chucks with thread - standard nut

p. 609

Morse taper shank ER collet chucks with tenon - standard nut

p. 611

Morse taper end mill holders for DIN 1835-B shanks

p. 613

Tenon for morse taper

p. 613

Morse taper shank drill chucks - right spin

p. 614

Morse taper shank drill chucks - right & left spin

p. 614

Keyless drill chucks

p. 615

High precision keyless drill chucks

p. 615

Morse taper adapters to DIN 238 (ISO 239)

p. 616

Morse taper adapters with thread to DIN 238 (ISO 239)

p. 617

Morse taper collets for twist drills

p. 618

Morse taper collets for milling cutters

p. 618

Threaded morse taper collets

p. 619

Morse taper floating reamer holders with er collet

p. 619

Morse taper shell reamer holders with ejector

p. 620

Morse taper broaching toolholders

p. 620

Morse taper shank with thread DIN 6358 combi shell mill holders

p. 621

Morse taper shank with thread DIN 6358 combi shell mill holders

p. 622

Tension/ compression morse taper tapping heads with thread

p. 623

Tension/ compression morse taper tapping heads with tenon

p. 623

Morse taper solid tapping heads with thread

p. 624

Morse taper solid tapping heads with tenon

p. 624

Morse taper open-ended sleeves

p. 625

Morse taper sleeves with release nut

p. 625

Morse taper adapters

p. 626

Extended morse taper adapters

p. 627

Extra-long morse taper extensions

p. 628

Cone ejectors

p. 629

Morse taper shank storage
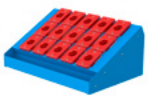
p. 630

Bench supports for morse taper shank

p. 630

ACCESSORIES AND SPARE PARTS

ER collets

ER collets
p. 631

ER collets - reduced set
p. 632

ER collets - complete set
p. 632

ER collets - set with oversize diameters
p. 633

ER collets – complete set
p. 633

ER collets - reduced set in case with spindle seat
p. 634

ER collets - complete set in case with spindle seat
p. 634

ER collets - reduced set and mini wrench in case with spindle seat
p. 635

ER collets - complete set and mini wrench in case with spindle seat
p. 635

ER collets - reduced set and standard wrench in case with spindle seat
p. 636

ER collets - complete set and standard wrench in case with spindle seat
p. 636

High precision ER collets
p. 637

ER collets with coolant holes
p. 638

Sealed ER collets
p. 639

Ultra precision sealed ER collets
p. 640

Steel sealed ER collets for high pressures
p. 641

High precision steel sealed ER collets for high pressures
p. 642

ER collets with square for tapping
p. 643

ER collets with square for tapping
p. 644

ER collets – tension adjustment
p. 645

ER clamping nuts mini type 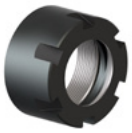
p. 648

ER clamping nuts mini type
p. 648

ER clamping nuts hexagonal type 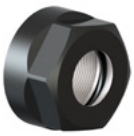
p. 649

ER clamping nuts standard type
p. 649

ER clamping nuts standard type 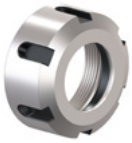
p. 650

ER high precision clamping nuts type 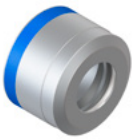
p. 650

ER clamping nuts standard type - ball bearing execution
p. 651

ER clamping nuts with outside thread - "GA" type
p. 651

ER clamping nuts "GA-E" type with outside thread - hexagonal hold
p. 652

ER wrenches for mini clamping nuts
p. 652

ER wrenches for exagonal clamping nuts
p. 653

ER wrenches for standard clamping nuts
p. 653

ER wrenches high precision clamping nuts
p. 654

ER wrenches for side grip clamping nuts
p. 654

ER torque wrenches for mini clamping nuts
p. 655

ER torque wrenches for hexagonal clamping nuts
p. 655

ACCESSORIES AND SPARE PARTS

ER collets

ER torque wrenches for standard clamping nuts

p. 656

Pull studs

DIN 69872 pull studs without coolant bore

p. 657

DIN 69872 pull studs with coolant bore

p. 657

DIN 69872 pull studs with coolant bore and double o-ring

p. 657

DIN 69872 type pull studs suitable for BT shanks without coolant bore

p. 658

DIN 69872 type pull studs suitable for BT shanks with coolant bore

p. 658

DIN 69872 type pull studs suitable for BT shanks with coolant bore and double o-ring
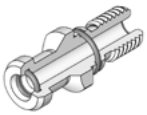
p. 658

ISO 7388/2 A pull studs without coolant bore

p. 659

ISO 7388/2 A pull studs with coolant bore

p. 659

ISO 7388/2 A pull studs with ID counterbore

p. 659

ISO 7388/2 B pull studs without coolant bore

p. 660

ISO 7388/2 B pull studs with coolant bore

p. 660

ISO 7388/2 B pull studs with ID counterbore

p. 660

BT pull studs without coolant bore

p. 661

BT pull studs with coolant bore

p. 661

BT pull studs with coolant bore and double o-ring

p. 662

BT type pull studs suitable for DIN 69871 shanks without coolant bore

p. 662

BT type pull studs suitable for DIN 69871 shanks with coolant bore

p. 662

JIS B 6339 pull studs with coolant bore

p. 663

JIS B 6339 pull studs with coolant bore and grinded head

p. 663

Pull studs for ISO 20 shank

p. 663

OTT pull studs adapters to DIN 2080

p. 664

BIESSE pull studs

p. 664

BRIDGEPORT pull studs

p. 664

C.B. FERRARI pull studs

p. 665

C.B. FERRARI pull studs with nut

p. 665

CHIRON pull studs

p. 665

CINCINNATI pull studs

p. 666

CORREA pull studs

p. 666

ACCESSORIES AND SPARE PARTS

Pull studs

MECCANICA CORTINI pull studs

p. 666

FAMUP pull studs

p. 667

GLORIA pull studs

p. 667

MAZAK pull studs without coolant bore

p. 667

MAZAK pull studs with coolant bore

p. 668

MAZAK pull studs with coolant bore and counterbore

p. 668

OKUMA pull studs (for DIN) with coolant bore and grinded head

p. 668

OKUMA pull studs (for BT) with coolant bore and grinded head

p. 669

OLIVETTI OCN pull studs

p. 669

RAMBAUDI pull studs

p. 670

SCM MORBIDELLI pull studs

p. 670

SECMU pull studs

p. 670

Set pull studs

p. 671

Tapping adapters

Tapping adapters without clutch

p. 672

Tapping adapters without clutch with screws

p. 672

Tapping adapters with clutch

p. 673

Tapping adapters with clutch with screws

p. 673

Reductions from adapter to adapter

p. 674

Tapping adapters with ER collet

p. 674

Threading die adapters

p. 675

ACCESSORIES AND SPARE PARTS

Assembly stands

Orientable assembly stands NT - SK - BT - double contact shanks

p. 677

Orientable assembly stands HSK and polygonal shanks

p. 677

Steel tooling clampers

p. 678

Double position assembly stands

p. 679

Spindle seat taper cleaners

p. 680

Tool stores
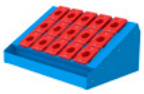
p. 681

Bench supports

p. 682

Tool holder bushings

p. 683

Instruments

Bright magnetic resetter

p. 684

Build-in magnetic resetters with dial gauge

p. 684

Build-in magnetic resetters with dial gauge
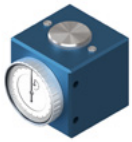
p. 684

Floating centering device - ground

p. 685

Floating centering device - burnished

p. 685

Non magnetic centering device

p. 686

Non magnetic centering device - ceramic head

p. 687

Non magnetic slim centering device - ceramic head

p. 687

Electronic centering device - with light

p. 688

Electronic centering device - with light and sound

p. 688

Electronic 3D centering device - with light and sound

p. 688

Tridimensional position detectors with dial gauge

p. 689

Ceramic probe

p. 690

Sphere coolant nozzles

p. 690

Extensions for coolant nozzles

p. 691

Sphere coolant nozzles for high pressure

p. 691

Orientable coolant nozzles for high pressure

p. 692

Spacers

p. 692

Mill locking cross head screws

p. 693

Mill locking cross head screws with coolant channels

p. 693

Wrenches for cross head screws

p. 694

Clutch drive rings for DIN 6358 combi shell mill holders

p. 694

Dowels for face mill holders

p. 695

Keys
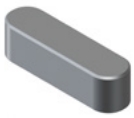
p. 696

ACCESSORIES AND SPARE PARTS

Instruments

Spares for MT adapters for milling cutters DIN 228 form A shank tie rods for mill

p. 696

Spares for MT adapters for milling cutters DIN 228 form A shank left nuts for tie rods

p. 697

Spares for MT adapters for milling cutters DIN 228 form A shank wrenches for left nuts

p. 697

Spares for combi MT adapters: twist drills + milling cutters reducers for tie rods

p. 698

Round head screws

p. 699

Locking screws for end mill holders

p. 700

Setting and locking screws

p. 701

Setting and locking screws with trough hole

p. 702

Locking screws with trough hole with trough hole

p. 702

ETS collets

ETS collets

p. 703

Standard clamping nuts for ETS collets

p. 704

EOC collets

p. 705

Sealed EOC collets

p. 706

Clamping nuts for EOC collets

p. 706

Collets for high grip devices

p. 707

Ultra precision collets for high grip devices

p. 708

Sealed collets for hydraulic chucks

p. 709

DA collets

p. 710

TG collets

p. 710

BAKUER collets

p. 711

443E collets

p. 711

BRIDGEPORT R8 collets

p. 711

ACCESSORIES AND SPARE PARTS

DIN6343 collets

Single cone clamping collets

p. 713

Emergency collets

p. 714

Double cone clamping collets

p. 714

Drawn back collets with external thread

p. 715

Drawback collets with external and internal thread

p. 715

Clamping sleeves for CUCCHI bar-feeders

p. 716

Clamping sleeves for IEMCA bar-feeders

p. 717

NIPLEX reductions for IEMCA bar-feeders

p. 717

Clamping sleeves for top automazioni bar-feeders

p. 718

VULKOLLAN workable emergency clamping sleeves for top automazioni bar-feeders

p. 719

Clamping sleeves top automazioni bar-feeders for sliding headstock lathes

p. 720

NIPLEX for top automazioni bar-feeders

p. 720

Collet locking pins

p. 721

Clamping sleeves for other bar-feeders

p. 721

Reduction sleeves

Universal reduction sleeves without stop

p. 722

Universal reduction sleeves with stop

p. 723

Extended universal reduction sleeves with stop

p. 724

Slotted reduction sleeves with stop

p. 726

Long type with double slot
p. 725

Slotted reduction sleeves with grain on the stop

p. 726

Reduction sleeves with extension

p. 727

Splitted reduction sleeves with stop - RZ type

p. 728

Grinded not hardened reduction sleeves with stop
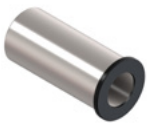
p. 729

Reduction sleeves for boring bar holders

p. 730

Morse taper reduction sleeves without stop

p. 731

Morse taper reduction sleeves with stop

p. 732

Reduction sleeves for BIGLIA etc.

p. 734

Short reduction sleeves for BIGLIA etc.

p. 734

Reduction sleeves with grain on stop for DOOSAN DAEWOO etc.

p. 735

Slotted reduction sleeves with stop for DOOSAN DAEWOO ETC.

p. 736

ACCESSORIES AND SPARE PARTS

Reduction sleeves

Reduction sleeves for MAZAK etc.

p. 737

Short reduction sleeves for MAZAK etc.

p. 738

Morse taper reduction sleeves for MAZAK etc.
p. 738

Reduction sleeves for DMG MORI SEIKI etc.

p. 739

Short reduction sleeves for DMG MORI SEIKI etc.

p. 740

Through coolant short reduction sleeves for DMG MORI SEIKI etc.

p. 740

Morse taper reduction sleeves for DMG MORI SEIKI etc.

p. 741

Through coolant morse taper reduction sleeves for DMG MORI SEIKI etc

p. 741

Through coolant extended reduction sleeves for DMG MORI SEIKI etc.

p. 741

Reduction sleeves for NAKAMURA TOME etc.

p. 742

Reduction sleeves for OKUMA LT 10M / LT 200M etc.

p. 743

Reduction sleeves for OKUMA LT 15M / LT 300M etc.

p. 743

Reduction sleeves for OKUMA LB 15 II etc.

p. 744

Reduction sleeves for OKUMA MACTURN 250 / MULTUS etc.

p. 744

Collets chucks

FAMUP RAG type shank ER collet chucks

p. 745

FAMUP RAG type shank shell mill holders

p. 745

BIMAK type shank ER collet chucks

p. 746

BIMAK type shank shell mill holders

p. 746

BRIDGEPORT R8 collet

p. 746

ER collet chucks

p. 747

Drill chucks - right spin

p. 748

Shanks for drill chucks DIN 238 / ISO 239 type

p. 748

Face mill holders

p. 749

Adapters to morse taper

p. 749

ACCESSORIES AND SPARE PARTS

Toolholders

Longitudinal mounting toolholders boring bar for turrets
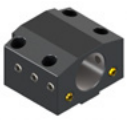
p. 750

Longitudinal mounting square tool holders for turrets

p. 750

Toolholders for BIGLIA B 1000 lathes
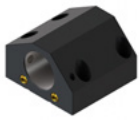
p. 751

Toolholders for BIGLIA B 56 and B500 lathes

p. 751

Straight shank floating reamer holders with ER collet

p. 753

Fixed threading die holders

p. 754

Control pins

Control pins toolholders DMG OKUMA DOOSAN MAZAK BIGLIA

p. 758

Control pins polygonal shank DIN ISO 26623-1

p. 761

Control pins cylindrical shank DIN69871A DIN2080 MAS403BT

p. 761

Control pins double contact DIN69871A MAS403BT

p. 762

Control pins HSK A-C shank DIN69893-1

p. 762

Control pins HSK F shank DIN69893-6

p. 763

Control pins VDI shank DIN 69880

p. 763

Clamping fingers for tool magazines

Clamping fingers for tool magazines

p. 764

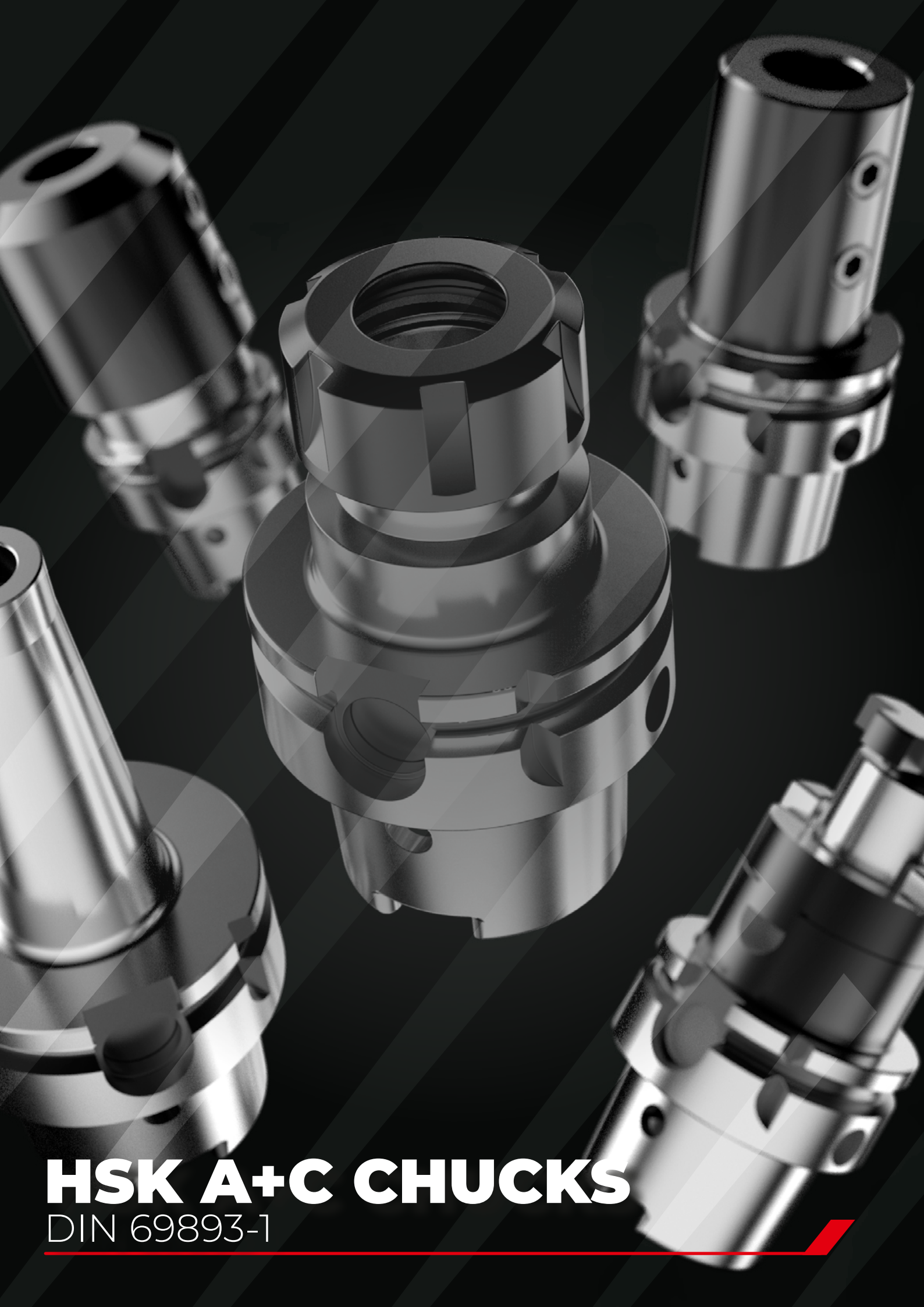

HSK A+C CHUCKS

DIN 69893-1

TABLE OF DIMENSIONS ACCORDING TO DIN 69893 STANDARD

HSK A

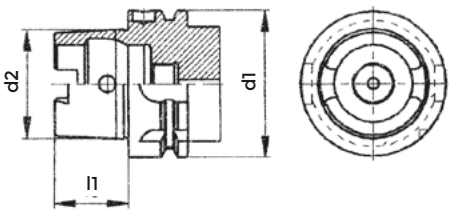

HSK C

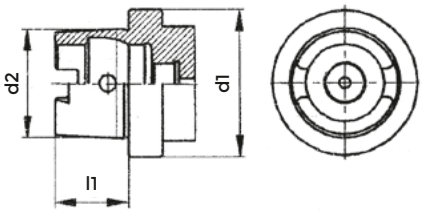

HSK E

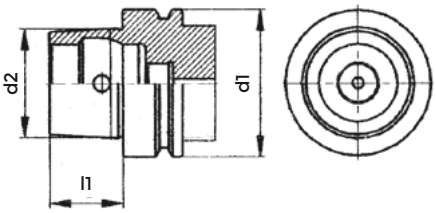

DIN 69893

HSK A - C - E		
NOMINAL DIA. d1	TAPER DIA. d2	TAPER LENGHT l1
32	24	16
40	30	20
50	38	25
63	48	32
100	75	50
125	95	63

HSK B

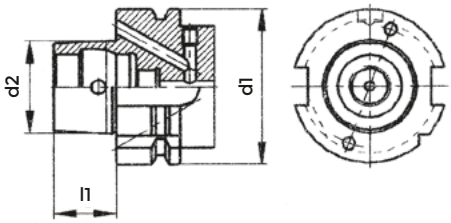

HSK D

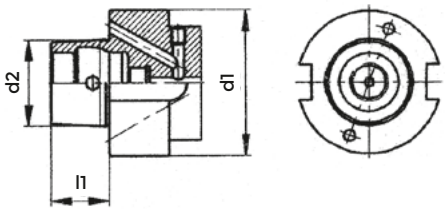

HSK F

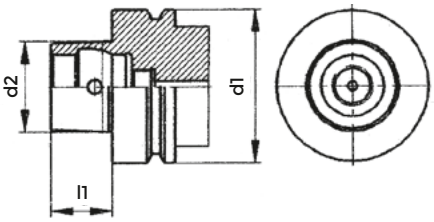

DIN 69893

HSK B - D - F		
NOMINAL DIA. d1	TAPER DIA. d2	TAPER LENGHT l1
40	24	16
50	30	20
63	38	25
100	60	40

TAPER SHANKS DATA SHEET

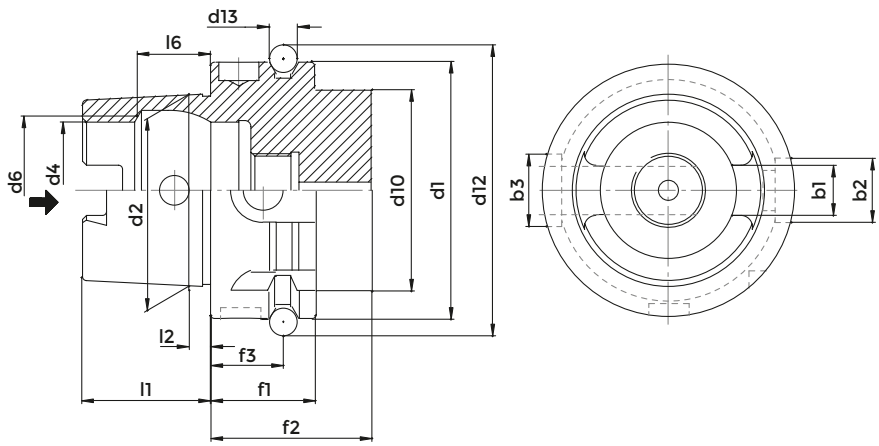

DIN 69893 A+C

	HSK 32	HSK 40	HSK 50	HSK 63	HSK 100	HSK 125
b1	7.05	8,05	10,54	12,54	20,02	25,02
b2	7	9	12	16	20	25
b3	9	11	14	18	22	28
d1	32	40	50	63	100	125
d2	24	30	38	48	75	95
d4	17	21	26	34	53	67
d6	19	23	29	37	58	73
d10	26	34	42	53	88	111
d12	37	45	59,3	72,3	109,75	134,75
d13	4	4	7	7	7	7
f1	20	20	26	26	29	29
f2	35	35	42	42	45	45
f3	16	16	18	18	20	20
l1	16	20	25	32	50	63
l2	3.2	4	5	6,3	10	12,5
l6	8.92	11,42	14,13	18,13	28,56	36,27

FORM A

- Used on machining centres, milling machines, turning machines, special machines with automatic tool change.
- Central, axial coolant supply through coolant channel.
- Torque transmission via two key slots at end of taper.
- Two slots on collar for tool magazine, location edge.

Hole for data carrier DIN 69893 in collar.

CONE TOLERANCE

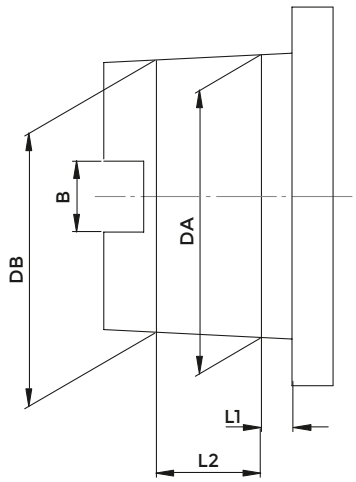

DIN 69893 A+C

HSK	L1	L2	DA		DB		B (only type A+C)
32 A+C	3,2	7,3	24	+0.005 +0,007	23,27	+0.003 +0,005	7.05 +/- 0.04
40 A+C+E	4	9,5	30	+0.005 +0,007	29,05	+0.003 +0,005	8.05 +/- 0.04
40 B+D	3,2	7,3	24	+0.005 +0.007	23,27	+0.003 +0,005	-
50 A+C+E	5	11	38	+0.006 +0.009	36,9	+0.003 +0.006	10.54 +/- 0.04
50 B+D+F	4	9,5	30	+0.005 +0.007	29,05	+0.003 +0,005	-
63 A+C+E	6,3	14,7	48	+0.007 +0.011	46,53	+0.003 +0.007	12.54 +/- 0.04
63 B+D+F	5	11	38	+0.006 +0.009	36,9	+0.003 +0.006	-
100 A+C	10	24	75	+0.009 +0.015	72,6	+0.003 +0.009	20.02 +/- 0.04
100 B+D	8	19	60	+0.008 +0.013	58,1	+0.003 +0.008	-
125 A+C	12,5	30,5	95	+0.008 +0.013	91,9	+0.003 +0.008	25,02 +/- 0,04

TECHNICAL DATA
KINTEK CHUCKS WITH ISO FITTING

All KINTEK toolholders are manufactured according to DIN norms. (these norms provide the same classes of tolerance for the attachment DIN69893 A+C, B+D, E, F)

COLLET CHUCK'S RUNOUT ACCURACY

The norm DIN 69882-6 permits a runout error of 0,005 mm. for DIN6499/ISO15488 collet chucks.

SHELL END MILL ADAPTOR'S RUNOUT ACCURACY

Our shell end mill adaptors meet the requirements of the norm DIN 69882-2, which prescribes for diameters Ø 16,22,27,32 a runout accuracy of 0,01

WELDON END MILL HOLDER'S RUNOUT ACCURACY

According to norm DIN 69882-4 Weldon end mill holders have to meet the following requirements:

BORE: H5
RUNOUT ACCURACY: 0.005.

CONSTRUCTIVE FEATURES

- Manufactured with casehardening Steel
- Casehardened with depth 0,4 - 0,5 mm
- Hardened-Tempered
- Hardness HRC 58+-2, Strength 800-1000 N/mm^2
- Black oxided
- Internal and external grinding finish of the cone
- Grinding finish on the front side and on the thread of collet nuts
- Tested 100% with certified measuring instruments and supplied with balancing certificate on request

END MILL HOLDERS WELDON

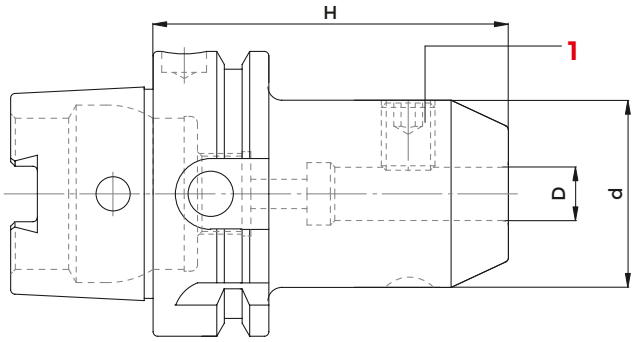

DIN 69893 A+C - DIN 1835/B

COD.	DESCRIPTION	HSK	H	D	d	G6.3 12000	1 SCREW
213-11701	HSK40AH60WE06	40	60	6	25	•	811-106001
213-11702	HSK40AH60WE08	40	60	8	28	•	811-106002
213-11703	HSK40AH65WE10	40	65	10	35	•	811-106004
213-11704	HSK40AH70WE12	40	70	12	42	•	811-106005
213-11706	HSK40AH80WE16	40	80	16	48	•	811-106006
213-11736	HSK40AH80WE20	40	80	20	52	•	811-106007
213-11712	HSK50AH80WE16	50	80	16	48	•	811-106006
213-11714	HSK50AH80WE20	50	80	20	52	•	811-106007
213-11737	HSK50AH105WE25	50	105	25	65	•	811-106008
213-11715	HSK63AH65WE06	63	65	6	25	•	811-106001
213-81733	HSK63AH130WE06	63	130	6	18	•	811-106015
213-11716	HSK63AH65WE08	63	65	8	28	•	811-106002
213-81734	HSK63AH130WE08	63	130	8	22	•	811-106036
213-11717	HSK63AH65WE10	63	65	10	35	•	811-106004
213-81735	HSK63AH130WE10	63	130	10	30	•	811-106003
213-11718	HSK63AH80WE12	63	80	12	42	•	811-106005
213-81736	HSK63AH130WE12	63	130	12	34	•	811-106013
213-11719	HSK63AH80WE14	63	80	14	44	•	811-106005
213-11720	HSK63AH80WE16	63	80	16	48	•	811-106006
213-81737	HSK63AH130WE16	63	130	16	42	•	811-106027
213-11721	HSK63AH80WE18	63	80	18	50	•	811-106006
213-11722	HSK63AH80WE20	63	80	20	52	•	811-106007
213-81738	HSK63AH130WE20	63	130	20	45	•	811-106032
213-11723	HSK63AH110WE25	63	110	25	65	•	811-106008
213-81739	HSK63AH130WE25	63	130	25	65	•	811-106008
213-11724	HSK63AH110WE32	63	110	32	72	•	811-106009
263-11780	HSK63AH120WE40	63	120	40	80	•	811-106009

follows >>

END MILL HOLDERS WELDON

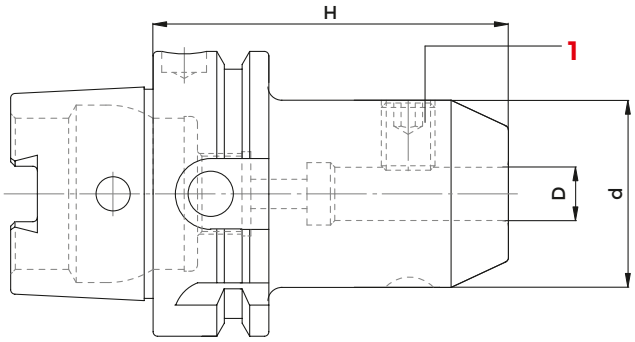

DIN 69893 A+C - DIN 1835/B

COD.	DESCRIPTION	HSK	H	D	d	G6.3 12000	1 SCREW
213-11738	HSK100AH90WE06	100	90	6	25	•	811-106001
213-11739	HSK100AH90WE08	100	90	8	28	•	811-106002
213-11740	HSK100AH90WE10	100	90	10	35	•	811-106004
213-11741	HSK100AH100WE12	100	100	12	42	•	811-106005
213-11742	HSK100AH100WE14	100	100	14	44	•	811-106005
213-11743	HSK100AH100WE16	100	100	16	48	•	811-106006
213-81740	HSK100AH200WE16	100	200	16	48	•	811-106006
213-11744	HSK100AH100WE18	100	100	18	50	•	811-106006
213-11745	HSK100AH110WE20	100	110	20	52	•	811-106007
213-11746	HSK100AH120WE25	100	120	25	65	•	811-106008
213-81741	HSK100AH200WE25	100	200	25	65	•	811-106008
213-11747	HSK100AH120WE32	100	120	32	72	•	811-106009
213-11748	HSK100AH120WE40	100	120	40	80	•	811-106009
263-11733	HSK100AH130WE50	100	130	50	100	•	811-106011

END MILL HOLDERS WELDON LONG

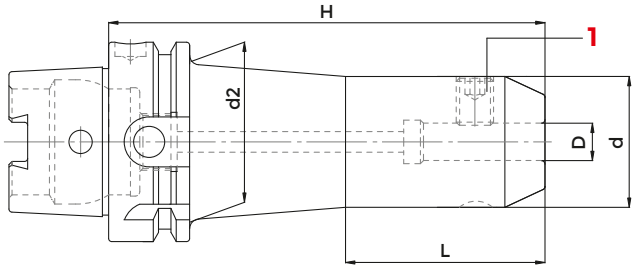

DIN 69893 A+C - DIN 1835/B

COD.	DESCRIPTION	HSK	H	D	d	L	d2	G6.3 12000	1 SCREW
213-11708	HSK50AH65WE08	50	65	8	28	-	-	•	811-106002
213-11710	HSK50AH80WE12	50	80	12	42	-	-	•	811-106005
263-11732	HSK50AH120WE32	50	120	32	71,5	-	-	•	811-106009
263-11757	HSK63AH100WE06	63	100	6	18	50	26	•	811-106015
263-11758	HSK63AH100WE08	63	100	8	22	50	30	•	811-106036
263-11759	HSK63AH100WE10	63	100	10	30	-	-	•	811-106003
263-11760	HSK63AH100WE12	63	100	12	34	-	-	•	811-106013
263-11761	HSK63AH100WE14	63	100	14	24	74	36	•	811-106005
263-11762	HSK63AH100WE16	63	100	16	42	-	-	•	811-106027
263-11764	HSK63AH100WE20	63	100	20	45	-	-	•	811-106032
263-11765	HSK63AH160WE06	63	160	6	18	50	34	•	811-106015
263-11766	HSK63AH160WE08	63	160	8	22	50	38	•	811-106036
263-11767	HSK63AH160WE10	63	160	10	30	65	46	•	811-106003
263-11768	HSK63AH160WE12	63	160	12	34	70	50	•	811-106013
263-11770	HSK63AH160WE16	63	160	16	42	70	50	•	811-106027
263-11772	HSK63AH160WE20	63	160	20	45	70	53	•	811-106032
263-11778	HSK63AH160WE25	63	160	25	45	70	53	•	811-106014
263-11779	HSK63AH160WE32	63	160	32	64,5	80	52	•	811-106022
213-11781	HSK100AH160WE06	100	160	6	18	50	46	•	811-106015
213-11782	HSK100AH160WE08	100	160	8	22	50	50	•	811-106036
213-11783	HSK100AH160WE10	100	160	10	30	65	48	•	811-106003
213-11784	HSK100AH160WE12	100	160	12	34	70	51	•	811-106013
213-11785	HSK100AH160WE16	100	160	16	42	70	59	•	811-106027
213-11786	HSK100AH160WE20	100	160	20	45	70	55	•	811-106032
263-11775	HSK100AH160WE25	100	160	25	55	80	66	•	811-106042
213-11796	HSK100AH160WE32	100	160	32	71,5	-	-	•	811-106009

END MILL HOLDERS WELDON WITH COOLANT CHANNELS

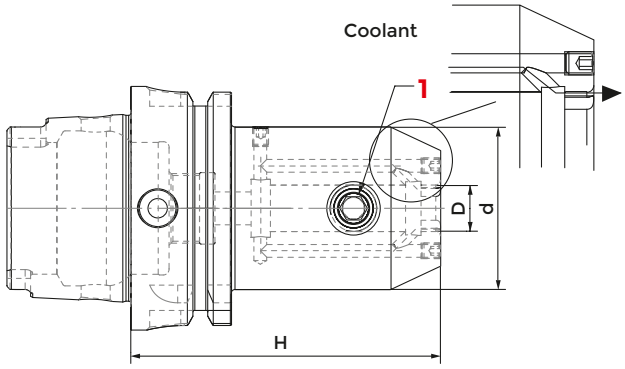

DIN 69893 A+C - DIN 1835/B

COD.	DESCRIPTION	HSK	H	D	d	G6.3 12000	1 SCREW
213-61764	HSK63AH65WE06-IK	63	65	6	25	•	811-106001
213-61765	HSK63AH65WE08-IK	63	65	8	28	•	811-106002
213-61766	HSK63AH65WE10-IK	63	65	10	35	•	811-106004
213-61767	HSK63AH80WE12-IK	63	80	12	42	•	811-106005
213-61769	HSK63AH80WE16-IK	63	80	16	48	•	811-106006
213-61771	HSK63AH80WE20-IK	63	80	20	52	•	811-106007
213-61772	HSK63AH110WE25-IK	63	110	25	65	•	811-106008
213-61773	HSK63AH110WE32-IK	63	110	32	72	•	811-106009
213-61774	HSK63AH125WE40-IK	63	125	40	80	•	811-106009

END MILL HOLDES FOR DIN 1835-E SHANKS

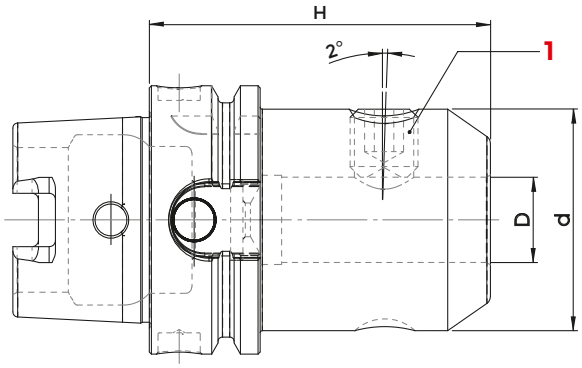

DIN 69893 A+C - DIN 1835/B

COD.	DESCRIPTION	HSK	H	d	D	G6.3 12000	1 SCREW
213-31722	HSK63AH100WN20	63	100	51,5	20	•	811-106007
213-31723	HSK63AH110WN25	63	110	64,5	25	•	811-106008
213-31724	HSK63H110WN32	63	115	71,5	32	•	811-106009
213-31745	HSK100AH100WN16	100	100	47,5	16	•	811-106006
213-31747	HSK100AH110WN20	100	110	51,5	20	•	811-106007

INDEXABLE DRILL HOLDERS

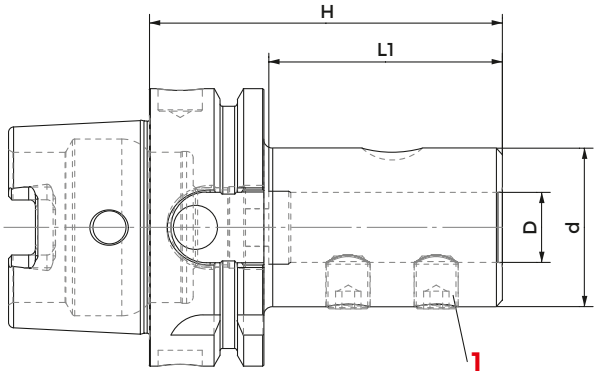

DIN 69893 A+C

COD.	DESCRIPTION	HSK	H	D	d	L1	G6.3 8000	1 SCREW
267-91772	HSK63AH80D16-E1	63	80	16	36	54	•	811-402003
267-91773	HSK63AH80D20-E1	63	80	20	40	54	•	811-402003
267-91774	HSK63AH90D25-E1	63	90	25	45	59	•	811-402005
267-91775	HSK63AH90D32-E1	63	90	32	52	63	•	811-402005

FACE MILL HOLDERS-TENONS DRIVE

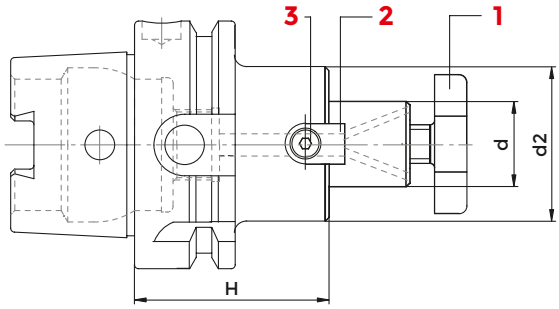

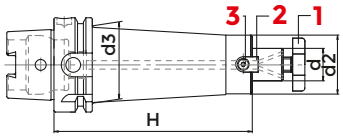

DIN 69893 A+C - ISO 3937

COD.	DESCRIPTION	HSK	H	d	d2	d3	G6.3 15000	1 CROSS SCREW	1 CROSS SCREW ON ENQUIRY	2 DOWELS	3 SCREW	WRENCH
216-71748*	HSK32AH45D16F	32	45	16	38	-	•	811-107003	811-107013	814-202280	811-101004	816-130002
216-71749*	HSK32AH50D22F	32	50	22	48	-	•	811-107004	811-107014	814-202250	811-101011	816-130003
216-71701*	HSK40AH45D16F	40	45	16	38	-	•	811-107003	811-107013	814-202280	811-101004	816-130002
216-71702*	HSK40AH50D22F	40	50	22	48	-	•	811-107004	811-107014	814-202250	811-101011	816-130003
216-71705	HSK50AH60D22F-L	50	60	22	48	-	•	811-107004	811-107014	814-202250	811-101011	816-130003
216-71708	HSK63AH45D16F-L	63	45	16	38	-	•	811-107003	811-107013	814-202280	811-101004	816-130002
216-71791	HSK63AH100D16F-L	63	100	16	38	40	•	811-107003	811-107013	814-202280	811-101004	816-130002
216-71717	HSK63AH160D16F-L	63	160	16	32	38	•	811-107003	811-107013	814-20214	811-101003	816-130002
216-91727	HSK63AH200D16F-L	63	200	16	38	-	•	811-107003	811-107013	814-202280	811-101004	816-130002
216-71709	HSK63AH50D22F-L	63	50	22	48	-	•	811-107004	811-107014	814-202250	811-101011	816-130003
216-71792	HSK63AH100D22F-L	63	100	22	48	-	•	811-107004	811-107014	814-202250	811-101011	816-130003
216-71718	HSK63AH160D22F-L	63	160	22	40	48	•	811-107004	811-107014	814-202150	811-101010	816-130003
216-91728	HSK63AH200D22F-L	63	200	22	48	-	•	811-107004	811-107014	814-202250	811-101011	816-130003
216-71710	HSK63AH55D27F-L	63	55	27	58	-	•	811-107005	811-107015	814-202250	811-101011	816-130004
216-71793	HSK63AH100D27F-L	63	100	27	58	-	•	811-107005	811-107015	814-202270	811-101018	816-130004
216-71719	HSK63AH160D27F-L	63	160	27	48	50	•	811-107005	811-107015	814-202160	811-101017	816-130004
216-71711	HSK63AH60D32F-L	63	60	32	78	-	•	811-107006	811-107016	814-202630	811-101029	816-130005
216-71794	HSK63AH100D32F-L	63	100	32	78	-	•	811-107006	811-107016	814-202630	811-101029	816-130005
216-71720	HSK63AH160D32F-L	63	160	32	58	-	•	811-107006	811-107016	814-202170	811-101027	816-130005
216-71750	HSK63AH65D40F-L	63	65	40	88	-	•	811-107007	811-107017	814-202710	811-101029	816-130006
216-91719	HSK63AH100D40F-L	63	100	40	88	-	•	811-107007	811-107017	814-202710	811-101029	816-130006
216-91720	HSK63AH160D40F-L	63	160	40	88	-	•	811-107007	811-107017	814-202710	811-101029	816-130006
216-71712	HSK100AH55D16F-L	100	55	16	38	-	•	811-107003	811-107013	814-202280	811-101004	816-130002
266-71730	HSK100H100D16F-L	100	100	16	38	-	•	811-107003	811-107013	814-202280	811-101004	816-130002
216-71722	HSK100AH160D16F-L	100	160	16	32	42	•	811-107003	811-107013	814-20214	811-101003	816-130002
216-71713	HSK100AH55D22F-L	100	55	22	48	-	•	811-107004	811-107014	814-202250	811-101011	816-130003
216-71797	HSK100AH100D22F-L	100	100	22	48	50	•	811-107004	811-107014	814-202250	811-101011	816-130003
216-71723	HSK100AH160D22F-L	100	160	22	40	50	•	811-107004	811-107014	814-202250	811-101011	816-130003

*coolant flow only through the inner central hole

follows >>

FACE MILL HOLDERS-TENONS DRIVE

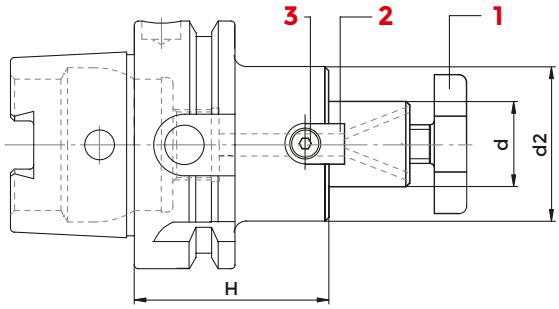

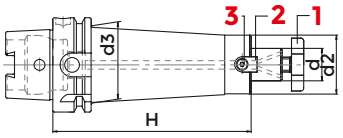

DIN 69893 A+C - ISO 3937

COD.	DESCRIPTION	HSK	H	d	d2	d3	G6.3 15000	1 CROSS SCREW	1 CROSS SCREW ON ENQUIRY	2 DOWELS	3 SCREW	WRENCH
216-91733	HSK100AH200D22F-L	100	200	22	48	-	•	811-107004	811-107014	814-202250	811-101011	816-130003
216-71714	HSK100AH55D27F-L	100	55	27	58	-	•	811-107005	811-107015	814-202270	811-101018	816-130004
216-71798	HSK100AH100D27F-L	100	100	27	58	60	•	811-107005	811-107015	814-202270	811-101018	816-130004
216-71724	HSK100AH160D27F-L	100	160	27	48	68	•	811-107005	811-107015	814-202270	811-101018	816-130004
216-91734	HSK100AH200D27F-L	100	200	27	58	-	•	811-107005	811-107015	814-202270	811-101018	816-130004
216-91735	HSK100AH250D27F-L	100	250	27	58	-	•	811-107005	811-107015	814-202270	811-101018	816-130004
216-71715	HSK100AH60D32F-L	100	60	32	66	-	•	811-107006	811-107016	814-202630	811-101029	816-130005
216-71799	HSK100AH100D32F-L	100	100	32	78	80	•	811-107006	811-107016	814-202630	811-101029	816-130005
216-71725	HSK100AH160D32F-L	100	160	32	58	76	•	811-107006	811-107016	814-202630	811-101029	816-130005
216-91725	HSK100AH200D32F-L	100	200	32	66	-	•	811-107006	811-107016	814-202630	811-101029	816-130005
216-71716	HSK100AH60D40F-L	100	60	40	88	-	•	811-107007	811-107017	814-202710	811-101029	816-130006
216-71726	HSK100AH160D40F-L	100	160	40	70	84	•	811-107004	811-107014	814-202710	811-101029	816-130003

ACCESSORIES

p. 693

p. 695

p. 694

COMBI-SHELL MILL ADAPTORS

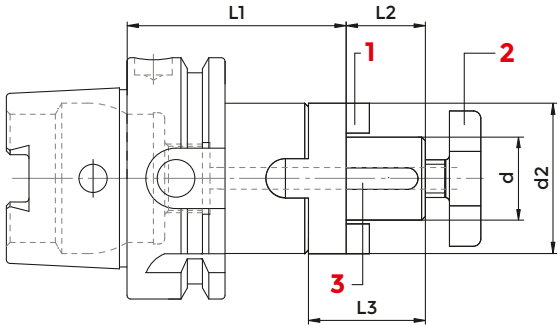

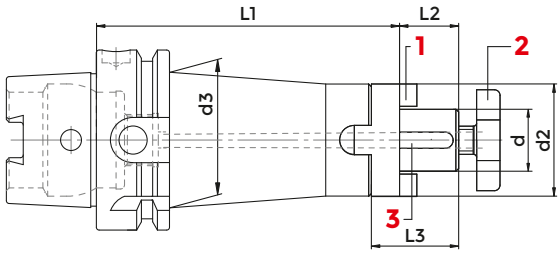

DIN 69893 A+C - DIN 6358

COD.	DESCRIPTION	HSK	d	L1	L2	L3	d2	d3	G6.3 8000	1 RING	2 CROSS SCREW	3 KEY	WRENCH
216-11708	HSK63AH60D16C	63	16	60	17	27	32	-	•	814-30001	811-107003	814-201010	816-130002
216-11777	HSK63AH100D16C	63	16	100	17	27	32	40	•	814-30001	811-107003	814-201010	816-130002
216-11788	HSK63AH160D16C	63	16	160	17	27	32	-	•	814-30001	811-107003	814-201010	816-130002
216-11709	HSK63AH60D22C	63	22	60	19	31	40	-	•	814-30002	811-107004	814-201020	816-130003
216-11728	HSK63AH100D22C	63	22	100	19	31	40	-	•	814-30002	811-107004	814-201020	816-130003
216-11770	HSK63AH160D22C	63	22	160	19	31	40	50	•	814-30002	811-107004	814-201020	816-130003
216-11710	HSK63AH60D27C	63	27	60	21	33	48	-	•	814-30003	811-107005	814-201030	816-130004
216-11736	HSK63AH100D27C	63	27	100	21	33	48	-	•	814-30003	811-107005	814-201030	816-130004
216-11789	HSK63AH160D27C	63	27	160	21	33	48	-	•	814-30003	811-107005	814-201030	816-130004
216-11711	HSK63AH65D32C	63	32	65	24	38	58	-	•	814-30004	811-107006	814-201040	816-130005
216-11778	HSK63AH100D32C	63	32	100	24	38	58	-	•	814-30004	811-107006	814-201040	816-130005
216-11712	HSK63AH70D40C	63	40	70	27	41	70	-	•	814-30005	811-107007	814-201050	816-130006
216-11779	HSK63AH100D40C	63	40	100	27	41	70	-	•	814-30005	811-107007	814-201050	816-130006
216-11790	HSK63AH160D32C	63	32	160	24	38	58	-	•	814-30004	811-107006	814-201040	816-130005
216-11755	HSK100AH100D22C	100	22	100	19	31	40	46	•	814-30002	811-107004	814-201020	816-130003
216-11756	HSK100AH100D27C	100	27	100	21	33	48	54	•	814-30003	811-107005	814-201030	816-130004
216-11757	HSK100AH100D32C	100	32	100	24	38	58	64	•	814-30004	811-107006	814-201040	816-130005

ACCESSORIES

p. 694

p. 693

p. 694

END MILL HOLDERS FOR MILLING CUTTERS WITH THREADED SHANKS

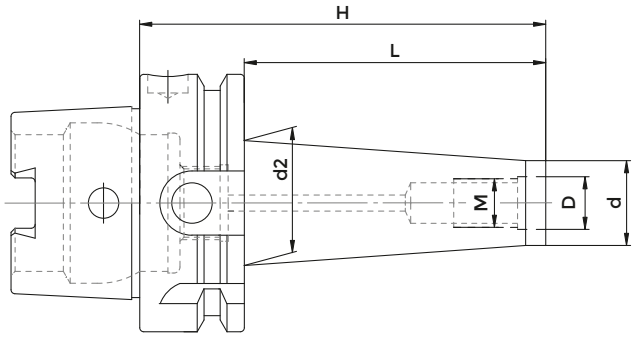

DIN 69893 A+C

HIGH SPEED LINE

COD.	DESCRIPTION	HSK	M	D	d	d2	H	L	G2.5 25000
267-81720	HSK63AH59M6	63	M6	6,5	10	10	59	33	•
267-81721	HSK63AH84M6	63	M6	6,5	10	20	84	58	•
267-81722	HSK63AH109M6	63	M6	6,5	10	23	109	83	•
267-81723	HSK63AH59M8	63	M8	8,5	13	15	59	33	•
217-81779	HSK63AH76M8	63	M8	8.5	13	23	76	50	•
217-81780	HSK63AH101M8	63	M8	8,5	13	23	101	75	•
217-81781	HSK63AH126M8	63	M8	8,5	13	26	126	100	•
267-81724	HSK63AH59M10	63	M10	10,5	18	19,5	59	33	•
217-81790	HSK63AH76M10	63	M10	10.5	18	23	76	50	•
217-81782	HSK63AH101M10	63	M10	10.5	18	28	101	75	•
217-81783	HSK63AH126M10	63	M10	10.5	18	28	126	100	•
267-81725	HSK63AH159M10	63	M10	10,5	18	34	159	133	•
267-81726	HSK63AH59M12	63	M12	12,5	21	24	59	33	•
217-81784	HSK63AH76M12	63	M12	12.5	21	24	76	50	•
217-81785	HSK63AH101M12	63	M12	12.5	21	31	101	75	•
217-81786	HSK63AH126M12	63	M12	12.5	21	31	126	100	•
267-81727	HSK63AH159M12	63	M12	12,5	21	31	159	133	•
267-81728	HSK63AH184M12	63	M12	12,5	21	39	184	158	•
267-81729	HSK63AH209M12	63	M12	12,5	21	42	209	183	•
267-81730	HSK63AH59M16	63	M16	17	29	34	59	33	•
217-81787	HSK63AH76M16	63	M16	17	29	34	76	50	•
217-81788	HSK63AH101M16	63	M16	17	29	34	101	75	•
217-81789	HSK63AH126M16	63	M16	17	29	36	126	100	•
267-81731	HSK63AH159M16	63	M16	17	29	39	159	133	•
267-81732	HSK63AH184M16	63	M16	17	29	39	184	158	•
267-81733	HSK63AH209M16	63	M16	17	29	42	209	183	•
267-81734	HSK100AH87M12	100	M12	12,5	21	24	87	58	•
267-81735	HSK100AH137M12	100	M12	12,5	21	47	137	108	•
267-81736	HSK100AH87M16	100	M16	17	29	32	87	58	•
267-81737	HSK100AH137M16	100	M16	17	29	42	137	108	•
267-81738	HSK100AH237M16	100	M16	17	29	55	237	208	•

MORSE TAPER ADAPTORS FOR DRILLS

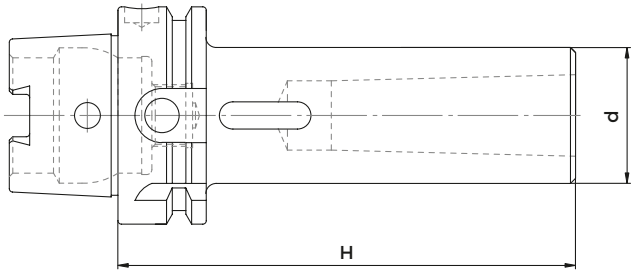

DIN 69893 A+C - DIN 228-2 FORM D

COD.	DESCRIPTION	HSK	MORSE	H	d	G6.3 8000
212-41706	HSK63AH100CM1P	63	1	100	25	•
212-41707	HSK63AH115CM2P	63	2	115	32	•
212-41708	HSK63AH135CM3P	63	3	135	40	•
212-41709	HSK63AH160CM4P	63	4	160	48	•
212-41716	HSK100AH120CM2P	100	2	120	32	•
212-41717	HSK100AH150CM3P	100	3	150	40	•
212-41718	HSK100AH170CM4P	100	4	170	48	•

MORSE TAPER ADAPTERS FOR MILLING CUTTERS

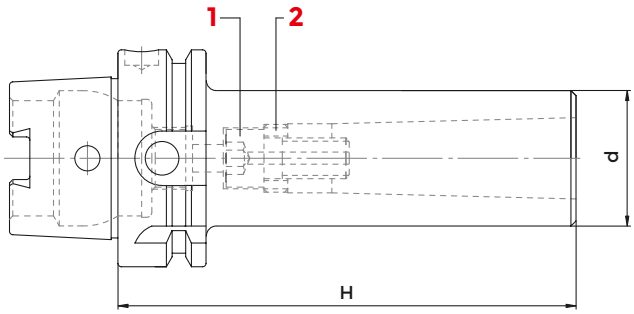

DIN 69893 A+C - DIN 228-2 FORM C

COD.	DESCRIPTION	HSK	MORSE	H	d	G6.3 8000	1 SCREW	2 RING
							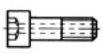	
212-21708	HSK63AH100CM1F	63	1	100	25	•	811-401100	811-302037
212-21709	HSK63AH115CM2F	63	2	115	32	•	811-401099	811-302031
212-21710	HSK63AH135CM3F	63	3	135	40	•	811-401078	811-302032
212-21711	HSK63AH160CM4F	63	4	160	48	•	811-401091	811-302036
212-21715	HSK100AH150CM3F	100	3	150	40	•	811-401098	811-302032
212-21716	HSK100AH170CM4F	100	4	170	48	•	811-401091	811-302036

TOOL EXTENSIONS / REDUCERS HSK A+C / HSK

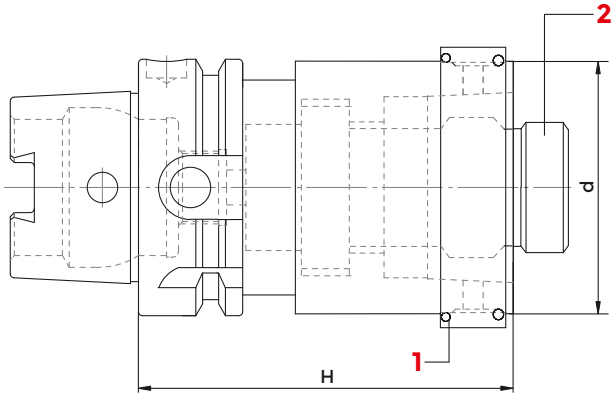

DIN 69893 A+C

					1	2
COD.	DESCRIPTION	HSK	d	H	RING (complete)	LOCKING UNIT (complete)
212-91711	HSK63H80HSK50	63	50	80	L0701450	HN50C
212-91703	HSK63AH100HSK63	63	63	100	L0701460	HN63C
212-91713	HSK100AH100HSK63	100	63	100	L0701480	HN100C
212-91705	HSK100AH140HSK100	100	100	140	L0701480	HN100C

REDUCERS HSK A+C / POLYGONAL

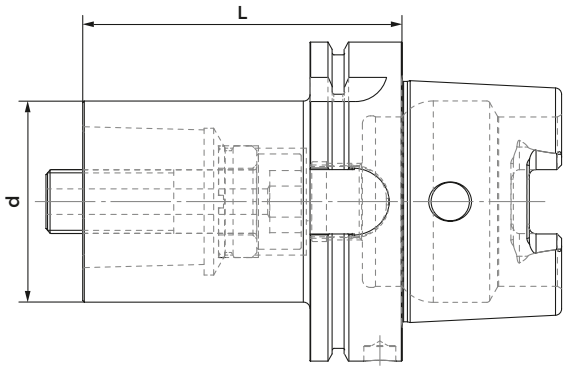

DIN 69893 A+C

COD.	DESCRIPTION	HSK	d	L
HSK63AH80C40	DIN69893 HSK63	63	40	80
HSK63AH90C50	DIN69893 HSK63	63	50	90
HSK63AH110C63	DIN69893 HSK63	63	63	110
HSK100AH90C40	DIN69893 HSK100	100	40	90
HSK100AH100C50	DIN69893 HSK100	100	50	100
HSK100AH90C63	DIN69893 HSK100	100	63	90
HSK100AH150C63	DIN69893 HSK100	100	63	150
HSK100AH120C80	DIN69893 HSK100	100	80	120

ER COLLET CHUCKS - HIGH PRECISION

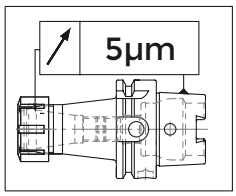

H= 0 > 100 mm - 5 µm
H= 100 > 200 mm - 10 µm

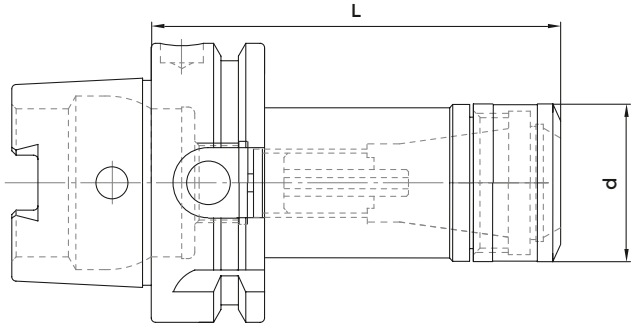

DIN 69893 HSKA - DIN 6499

COD.	DESCRIPTION	HSK	L	d	ER	G2.5 30000	NUT	WRENCH
214-91747	HSK63AH75ER16-HP	63	75	30	16	•	812-203085	816-203069
214-91748	HSK63AH75ER25-HP	63	75	40	25	•	812-203086	816-203070
214-91749	HSK63AH75ER32-HP	63	75	50	32	•	812-203087	816-203071
214-91738	HSK63AH100ER16-HP	63	100	30	16	•	812-203085	816-203069
214-91739	HSK63AH100ER25-HP	63	100	40	25	•	812-203086	816-203070
214-91740	HSK63AH100ER32-HP	63	100	50	32	•	812-203087	816-203071
214-91742	HSK63AH160ER16-HP	63	160	30	16	•	812-203085	816-203069
214-91743	HSK63AH160ER25-HP	63	160	40	25	•	812-203086	816-203070
214-91744	HSK63AH160ER32-HP	63	160	50	32	•	812-203087	816-203071

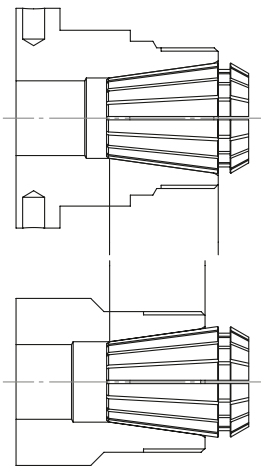

HIGH PRECISION LINE

STANDARD

Kit Box:
- 1 Collet chuck
- 10 ER collets

ORDER CODE	COMPOSITION
KIT HSK63 ER16 HP	N°1 HSK63 AH75 ER16 HP + N°10 COLLETS ER16 HP
KIT HSK63 ER25 HP	N°1 HSK63 AH75 ER25 HP + N°10 COLLETS ER25 HP
KIT HSK63 ER32 HP	N°1 HSK63 AH75 ER32 HP + N°10 COLLETS ER32 HP

ACCESSORIES

p. 650

p. 631

p. 654

ER MINI COLLET CHUCKS - HIGH SPEED LINE

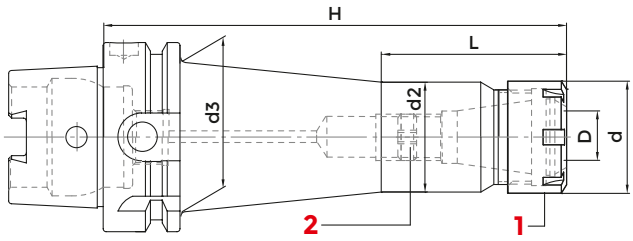

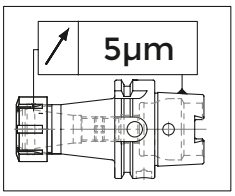

H= 0 > 100 mm - 5 µm
H= 100 > 200 mm - 10 µm

DIN 69893 A+C - DIN 6499/ISO 15488

HIGH SPEED LINE

COD.	DESCRIPTION	HSK	H	D	d	ER	L	d2	d3	G2.5 30000	1 NUT	2 SCREW
214-31740	HSK32AH65ER16M	32	65	0,5÷10	22	16M	-	20	-	•	812-203013	811-303119
214-31741	HSK32AH70ER25M	32	70	1÷16	35	25M	-	30	-	•	812-203015	811-303121
214-31745	HSK40AH60ER16M	40	60	0,5÷10	22	16M	-	20	-	•	812-203013	811-303119
214-31722	HSK40AH70ER16M	40	70	0,5÷10	22	16M	-	20	-	•	812-203013	811-303119
214-31732	HSK40AH120ER16M	40	120	0,5÷10	22	16M	47	20	29	•	812-203013	811-303119
214-31723	HSK50AH80ER16M	50	80	0,5÷10	22	16M	-	20	-	•	812-203013	811-303119
214-31734	HSK50AH160ER16M	50	160	0,5÷10	22	16M	57	20	28	•	812-203013	811-303119
264-31764	HSK63AH70ER11M	63	70	1÷8	16	11M	-	15	-	•	812-203012	811-303081
264-31768	HSK63AH130ER11M	63	130	1÷8	16	11M	-	15	-	•	812-203012	811-303081
264-31765	HSK63AH70ER16M	63	70	0,5÷10	22	16M	-	21	-	•	812-203013	811-303119
214-31724	HSK63AH90ER16M	63	90	0,5÷10	22	16M	-	20	-	•	812-203013	811-303119
264-31769	HSK63AH130ER16M	63	130	0,5÷10	22	16M	-	22	-	•	812-203013	811-303119
214-31736	HSK63AH160ER16M	63	160	0,5÷10	22	16M	57	20	28	•	812-203013	811-303119
264-31762	HSK63AH200ER16M	63	200	0,5÷10	22	16M	-	22	-	•	812-203013	811-303119
264-31766	HSK63AH70ER20M	63	70	1÷15	28	20M	-	27	-	•	812-203014	811-303120
264-31770	HSK63AH130ER20M	63	130	1÷15	28	20M	-	27	-	•	812-203014	811-303120
264-31772	HSK63AH200ER20M	63	200	1÷15	28	20M	-	27	-	•	812-203014	811-303120
264-31767	HSK63AH70ER25M	63	70	1÷16	35	25M	-	33	-	•	812-203015	811-303121
264-31771	HSK63AH130ER25M	63	130	1÷16	35	25M	-	34	-	•	812-203015	811-303121
214-31737	HSK63AH160ER25M	63	160	1÷16	35	25M	68	34	42	•	812-203015	811-303121
264-31773	HSK63AH200ER25M	63	200	1÷16	35	25M	-	33	-	•	812-203015	811-303121
214-31772	HSK100AH160ER16M	100	160	0,5÷10	22	16M	57	20	30	•	812-203013	811-303119
264-31774	HSK100AH100ER20M	100	100	1÷15	28	20M	-	27	-	•	812-203014	811-303120
264-31776	HSK100AH160ER20M	100	160	1÷15	28	20M	-	27	-	•	812-203014	811-303120
264-31777	HSK100AH200ER20M	100	200	1÷15	28	20M	-	27	-	•	812-203014	811-303120
264-31775	HSK100AH100ER25M	100	100	1÷16	35	25M	-	34	-	•	812-203015	811-303121
214-31773	HSK100AH160ER25M	100	160	1÷16	35	25M	68	34	46	•	812-203015	811-303121
264-31778	HSK100AH200ER25M	100	200	1÷16	35	25M	-	34	-	•	812-203015	811-303121

ACCESSORIES

p. 648

p. 631

p. 652

ER COLLET CHUCKS WITH HEXAGONAL NUT

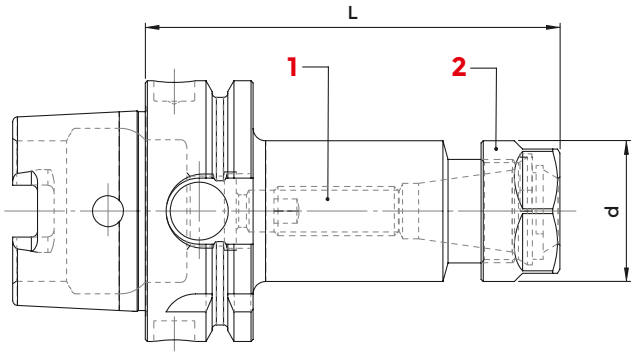

DIN 69893 A+C

COD.	DESCRIPTION	HSK	ER	d	L	G6.3 15000	2 NUT	1 SCREW	WRENCH
274-31704EXA	HSK63A-ER16GE/H70	63	ER 16 1÷12	28	70	•	812-203009	811-303119	816-203012
274-31705EXA	HSK63A-ER16GE/H100	63	ER 16 1÷12	28	100	•	812-203009	811-303119	816-203012
274-31706EXA	HSK63A-ER16GE/H130	63	ER 16 1÷12	28	130	•	812-203009	811-303119	816-203012
274-31707EXA	HSK63A-ER16GE/H160	63	ER 16 1÷12	28	160	•	812-203009	811-303119	816-203012
274-31708EXA	HSK63A-ER16GE/H200	63	ER 16 1÷12	28	200	•	812-203009	811-303119	816-203012
274-31709EXA	HSK63A-ER20GE/H100	63	ER 20 1÷15	34	100	•	812-203010	811-303120	816-203013
274-31710EXA	HSK100A-ER16GE/H160	100	ER 16 1÷12	28	160	•	812-203009	811-303119	816-203012

ACCESSORIES

p. 649

p. 631

p. 653

ER COLLET CHUCKS

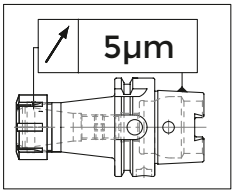

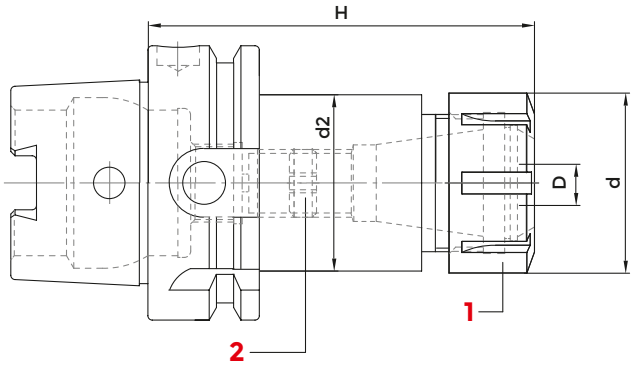

H= 0 > 100 mm - 5 µm
H= 100 > 200 mm - 10 µm

DIN 69893 A+C - DIN 6499/ISO 15488

COD.	DESCRIPTION	HSK	H	D	d	ER	d2	G6.3 15000	1 NUT	2 SCREW
214-31746	HSK40AH65ER25	40	65	1÷16	42	25	32	•	812-203001	811-303121
214-31702	HSK40AH80ER25	40	80	1÷16	42	25	32	•	812-203001	811-303121
214-31747	HSK40AH65ER32	40	65	2÷20	50	32	40	•	812-203002	811-303118
214-31703	HSK40AH100ER32	40	100	2÷20	50	32	40	•	812-203002	811-303118
264-31779	HSK50AH70ER25	50	70	1÷16	42	25	41	•	812-203001	811-303121
214-31705	HSK50AH95ER25	50	95	1÷16	42	25	32	•	812-203001	811-303121
264-31780	HSK50AH70ER32	50	70	2÷20	50	32	35	•	812-203002	811-303118
214-31706	HSK50AH100ER32	50	100	2÷20	50	32	40	•	812-203002	811-303118
264-31781	HSK50AH75ER40	50	75	3÷30	63	40	42	•	812-203003	811-303122
264-31736	HSK63AH75ER16	63	75	0,5÷10	32	16	22	•	812-203005	811-303119
264-31741	HSK63AH100ER16	63	100	0,5÷10	32	16	28	•	812-203005	811-303119
264-31790	HSK63AH130ER16	63	130	0,5÷10	32	16	28	•	812-203005	811-303119
264-31731	HSK63AH160ER16	63	160	0,5÷10	32	16	28	•	812-203005	811-303119
264-31794	HSK63AH200ER16	63	200	0,5÷10	32	16	28	•	812-203005	811-303119
264-31737	HSK63AH75ER20	63	75	1÷13	35	20	25	•	812-203006	811-303120
264-31742	HSK63AH100ER20	63	100	1÷13	35	20	34	•	812-203006	811-303120
264-31791	HSK63AH130ER20	63	130	1÷13	35	20	34	•	812-203006	811-303120
264-31732	HSK63AH160ER20	63	160	1÷13	35	20	34,5	•	812-203006	811-303120
264-31795	HSK63AH200ER20	63	200	1÷13	35	20	34	•	812-203006	811-303120
264-31738	HSK63AH75ER25	63	75	1÷16	42	25	32	•	812-203001	811-303121
214-31707	HSK63AH100ER25	63	100	1÷16	42	25	41,5	•	812-203001	811-303121
264-31792	HSK63AH130ER25	63	130	1÷16	42	25	41	•	812-203001	811-303121
264-31743	HSK63AH160ER25	63	160	1÷16	42	25	41,5	•	812-203001	811-303121
264-31796	HSK63AH200ER25	63	200	1÷16	42	25	41	•	812-203001	811-303121
264-31739	HSK63AH75ER32	63	75	2÷20	50	32	40	•	812-203002	811-303118
214-31708	HSK63AH100ER32	63	100	2÷20	50	32	49,5	•	812-203002	811-303118
264-31793	HSK63AH130ER32	63	130	2÷20	50	32	49	•	812-203002	811-303118
214-31720	HSK63AH160ER32	63	160	2÷20	50	32	49,5	•	812-203002	811-303118
264-31797	HSK63AH200ER32	63	200	2÷20	50	32	49	•	812-203002	811-303118

follows >>

ER COLLET CHUCKS

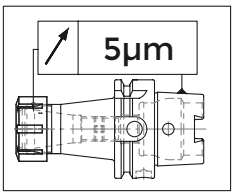

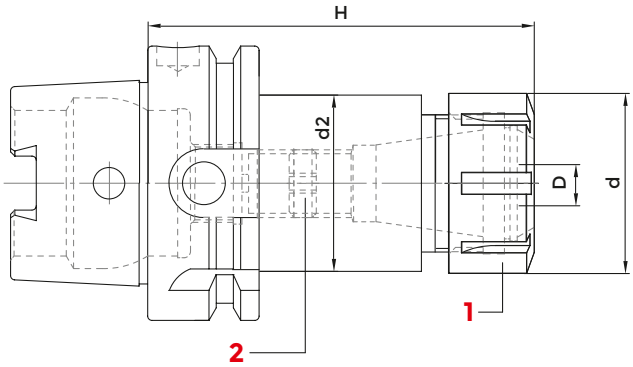

H= 0 > 100 mm - 5 µm
H= 100 > 200 mm - 10 µm

DIN 69893 A+C - DIN 6499/ISO 15488

COD.	DESCRIPTION	HSK	H	D	d	ER	d2	G6.3 15000	1 NUT	2 SCREW
264-31740	HSK63AH80ER40	63	80	3÷30	63	40	50	•	812-203003	811-303122
264-31782	HSK63AH100ER40	63	100	3÷30	63	40	50	•	812-203003	811-303122
214-31709	HSK63AH120ER40	63	120	3÷30	63	40	50	•	812-203003	811-303122
214-31721	HSK63AH160ER40	63	160	3÷30	63	40	50	•	812-203003	811-303122
264-31798	HSK63AH200ER40	63	200	3÷30	63	40	50	•	812-203003	811-303122
264-31783	HSK63AH105ER50	63	105	6÷36	78	50	53	•	812-203007	-
264-31784	HSK100AH100ER16	100	100	0,5÷10	32	16	28	•	812-203005	811-303119
264-31788	HSK100AH160ER16	100	160	0,5÷10	32	16	28	•	812-203005	811-303119
264-31785	HSK100AH100ER20	100	100	1÷13	35	20	34	•	812-203006	811-303120
264-31789	HSK100AH160ER20	100	160	1÷13	35	20	34	•	812-203006	811-303120
214-31752	HSK100AH160ER25	100	160	1÷16	42	25	41,5	•	812-203001	811-303121
264-31799	HSK100AH200ER20	100	200	1÷13	35	25	34	•	812-203006	811-303120
214-31777	HSK100AH100ER25	100	100	1÷16	42	25	41,5	•	812-203001	811-303121
274-31701	HSK100AH200ER25	100	200	1÷16	42	25	41	•	812-203001	811-303121
214-31725	HSK100AH100ER32	100	100	2÷20	50	32	49,5	•	812-203002	811-303118
264-31786	HSK100AH120ER32	100	120	2÷20	50	32	49	•	812-203002	811-303118
214-31738	HSK100AH160ER32	100	160	2÷20	50	32	49,5	•	812-203002	811-303118
274-31702	HSK100AH200ER32	100	200	2÷20	50	32	49	•	812-203002	811-303118
264-31787	HSK100AH100ER40	100	100	3÷30	63	40	50	•	812-203003	-
214-31731	HSK100AH120ER40	100	120	3÷30	63	40	62,5	•	812-203003	811-303122
214-31739	HSK100AH160ER40	100	160	3÷30	63	40	62,5	•	812-203003	811-303122
274-31703	HSK100AH200ER40	100	200	3÷30	63	40	50	•	812-203003	811-303122
274-31712	HSK100AH120ER50	100	120	6-36	78	50	64,5	•	812-203038	-
264-31747	HSK125AH100ER25	125	100	1÷16	42	25	41,5	•	812-203001	811-303121
264-31748	HSK125AH100ER32	125	100	2÷20	50	32	49,5	•	812-203002	811-303118
264-31749	HSK125AH120ER40	125	120	3÷30	63	40	62,5	•	812-203003	811-303122

ACCESSORIES

p. 649

p. 631

p. 653

ER COLLET CHUCKS - HIGH SPEED LINE

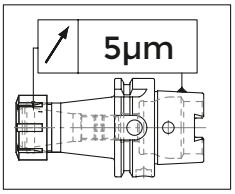

H= 0 > 100 mm - 5 µm
H= 100 > 200 mm - 10 µm

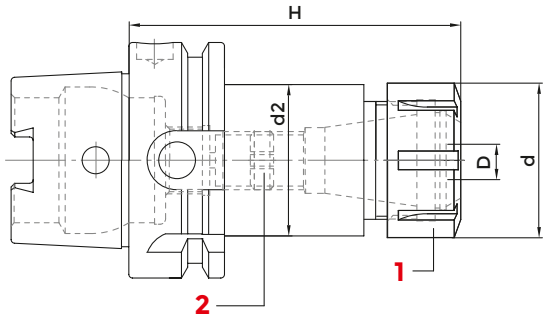

DIN 69893 A+C - DIN 6499/ISO 15488 — HIGH SPEED LINE

COD.	DESCRIPTION	HSK	H	D	d	ER	d2	G2.5 30000	1 NUT	2 SCREW
214-91731	HSK63AH75ER16	63	75	0,5÷10	32	16	22	•	812-203080	811-303119
214-91734	HSK63AH75ER25	63	75	1÷16	42	25	32	•	812-203082	811-303121
214-91737	HSK63AH75ER32	63	75	2÷20	50	32	40	•	812-203083	811-303118
214-91735	HSK63AH80ER40	63	80	3÷30	63	40	50	•	812-203084	811-303122
214-91732	HSK63AH100ER16	63	100	0,5÷10	32	16	28	•	812-203080	811-303119
214-91733	HSK63AH75ER20	63	75	1÷13	35	20	34,5	•	812-203081	811-303120
214-91702	HSK63AH100ER25	63	100	1÷16	42	25	41,5	•	812-203082	811-303121
214-91703	HSK63AH100ER32	63	100	2÷20	50	32	49,5	•	812-203083	811-303118
214-91704	HSK63AH120ER40	63	120	3÷30	63	40	50	•	812-203084	811-303122
214-91710	HSK63AH160ER32	63	160	2÷20	50	32	49,5	•	812-203083	811-303118

ACCESSORIES

p. 649

p. 631

p. 653

EQUIPMENT CASE WITH COMPLETE SET OF ER COLLETS, AD SHAPE COLLET CHUCK AND WRENCH

COD.	DESCRIPTION	HSK	CHUCK	CASE	WRENCH	COLLET
KITHSK63ER25	HSK63 H100 - ER25	63	214-31707	7022	816-203001	ER25D... Ø 2 - 3 - 4 - 5 - 6 - 8 - 10 - 12 - 14 - 16
KITHSK63ER32	HSK63 H100 - ER32	63	214-31708	7023	816-203002	ER32D... Ø 3 - 4 - 6 - 8 - 10 - 12 - 14 - 16 - 18 - 20
KITHSK63ER40	HSK63 H120 - ER40	63	214-31709	7024	816-203003	ER40D... Ø 5 - 6 - 8 - 10 - 12 - 16 - 20 - 22 - 24 - 26

MILLING CHUCK

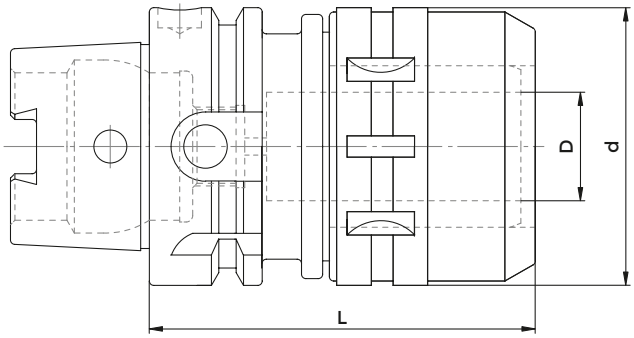

DIN 69893 A+C

COD.	DESCRIPTION	HSK	D	d	L	G6.3 12000
214-01701	HSK63AH105C20	63	20	54	105	•
214-01715	HSK63AH110C32	63	32	63	110	•
214-01702	HSK63AH130C32	63	32	72	130	•
214-01705	HSK100AH110C20	100	20	54	110	•
214-01706	HSK100AH123C32	100	32	72	123	•

Supplied with wrench

MILLING CHUCK (diameter)	SPECIFICATION (DIN)	RUN-OUT (3xD)	CLAMPING TORQUE
C20	DIN 69893 A	0~0,01	980M.m (100 Kgf.m)
C32	DIN 69893 A	0~0,01	3430M.m (350 Kgf.m)

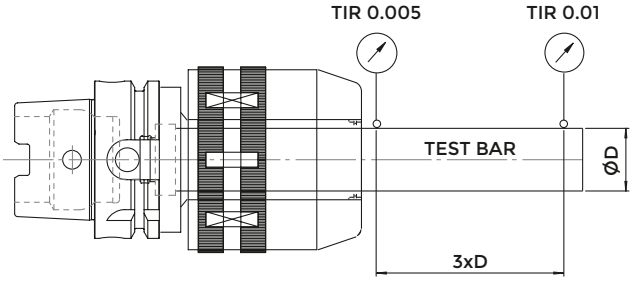

ORDER CODE	COMPOSITION
KIT HSK63A C20	N° HSK63AH105C20 + 5 collets K20: Ø6,8,10,12,16 + wrench
KIT HSK63A C32	N° HSK63AH130C32 + 7 collets K32: Ø6,8,10,12,16,20,25 + wrench

Kit box:
- 1 milling chuck
- 1 collets kit
- 1 wrench

ACCESSORIES

p. 707

NC-DRILL CHUCKS FOR LEFT AND RIGHT ROTATION

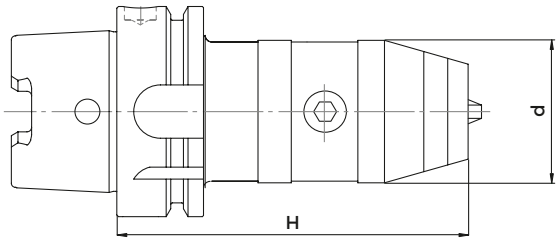

DIN 69893 A+C

COD.	DESCRIPTION	HSK	H	d	CLAMPING CAPACITY
252-11751	HSK63AH130R0,5-13X	63	130	50	0,5-13
252-11752	HSK63AH140R2,5-16X	63	140	57	2,5-16
252-11753	HSK100AH111R0,5-13X	100	111	50	0,5-13
252-11754	HSK100AH116R2,5-16X	100	116	57	2,5-16

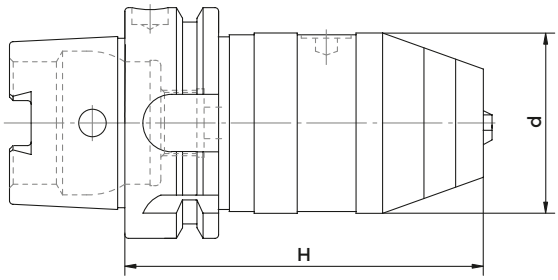

DIN 69893 A+C

COD.	DESCRIPTION	HSK	H	d	CLAMPING CAPACITY
252-11733	HSK63AH105R1-13X	63 *	105	50	1-13
252-11734	HSK63AH110R3-16X	63 *	110	57	3-16

*with internal coolant

SHANKS FOR DRILL CHUCKS

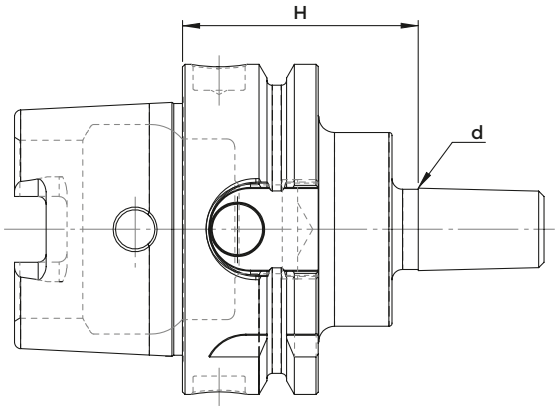

DIN 69893 A+C

COD.	DESCRIPTION	HSK	d	H
216-31702	HSK 63 A- B 12	63	12,065	45
216-31703	HSK 63 A- B 16	63	15,733	45
216-31704	HSK 63 A- B 18	63	17,78	45

END MILL HOLDERS WELDON - HIGH SPEED LINE

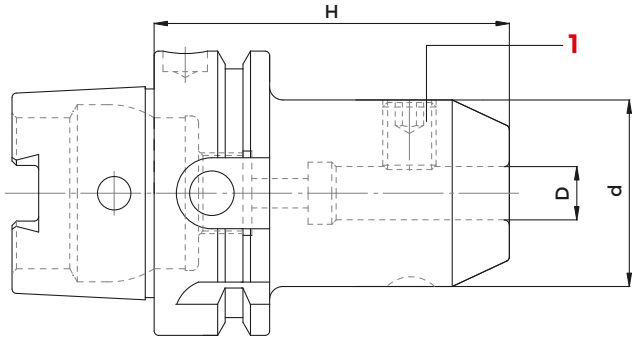

DIN 69893 E - DIN 1835/B

HIGH SPEED LINE

COD.	DESCRIPTION	H	D	d	G2.5 25000	1 SCREW
213-91701	HSK63AH65WE06	65	6	25	•	811-106001
213-91702	HSK63AH65WE08	65	8	28	•	811-106002
213-91703	HSK63AH65WE10	65	10	35	•	811-106004
213-91704	HSK63AH80WE12	80	12	42	•	811-106005
213-91705	HSK63AH80WE14	80	14	44	•	811-106005
213-91706	HSK63AH80WE16	80	16	48	•	811-106006
213-91707	HSK63AH80WE18	80	18	50	•	811-106006
213-91708	HSK63AH80WE20	80	20	52	•	811-106007
213-91709	HSK63AH110WE25	110	25	65	•	811-106008
213-91710	HSK63AH110WE32	110	32	72	•	811-106009

END MILL HOLDERS WELDON LONG - HIGH SPEED LINE

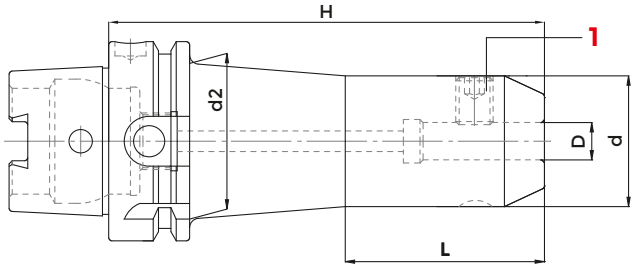

DIN 69893 A+C

HIGH SPEED LINE

COD.	DESCRIPTION	H	D	d	d2	L	G2.5 25000	1 SCREW
213-91722	HSK63AH100WE06	100	6	18	26	50	•	811-106015
213-91723	HSK63AH100WE08	100	8	22	30	50	•	811-106036
213-91724	HSK63AH100WE10	100	10	30	-	-	•	811-106003
213-91725	HSK63AH100WE12	100	12	34	-	-	•	811-106013
213-91727	HSK63AH100WE16	100	16	42	-	-	•	811-106027
213-91729	HSK63AH100WE20	100	20	45	-	-	•	811-106032

ER MINI COLLET CHUCKS EXTRA THIN - HIGH SPEED LINE

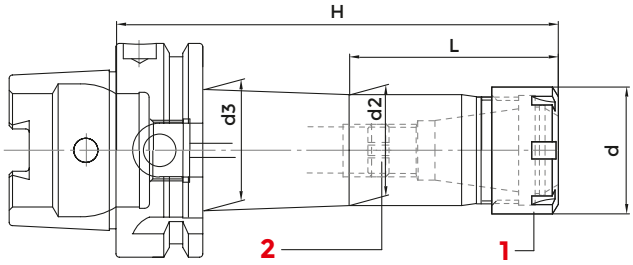

DIN 69893 A+C - DIN 6499/ISO 15488

HIGH SPEED LINE

COD.	DESCRIPTION	HSK	ER	d	H	L	d2	d3	G2.5 30000	1 NUT	2 SCREW
214-91723	HSK40AH70ER11M	40	11M	16	70	20	14	16	•	812-203012	811-303081
214-91724	HSK40AH100ER11M	40	11M	16	100	40	14	20	•	812-203012	811-303081
214-91715	HSK63AH100ER11M	63	11M	16	100	40	14	20	•	812-203012	811-303081
214-91720	HSK63AH100ER16M	63	16M	22	100	42	20	25	•	812-203013	811-303119
214-91721	HSK63AH160ER16M	63	16M	22	160	90	20	26	•	812-203013	811-303119
214-91726	HSK63AH100ER20M	63	20M	28	100	48	26	30	•	812-203014	811-303120
214-91717	HSK63AH100ER25M	63	25M	35	100	-	33	-	•	812-203015	811-303121
214-91716	HSK63AH160ER11M	63	11M	16	160	50	14	23	•	812-203012	811-303081
214-91727	HSK63AH160ER20M	63	20M	28	160	98	26	31	•	812-203014	811-303120
214-91722	HSK63AH160ER25M	63	25M	35	160	95	33	35	•	812-203015	811-303121
214-91718	HSK100AH100ER16M	100	16M	22	100	47	22	26	•	812-203013	811-303119

ACCESSORIES

p. 648

p. 631

p. 652

TENSION AND COMPRESSION TAPPING HEADS

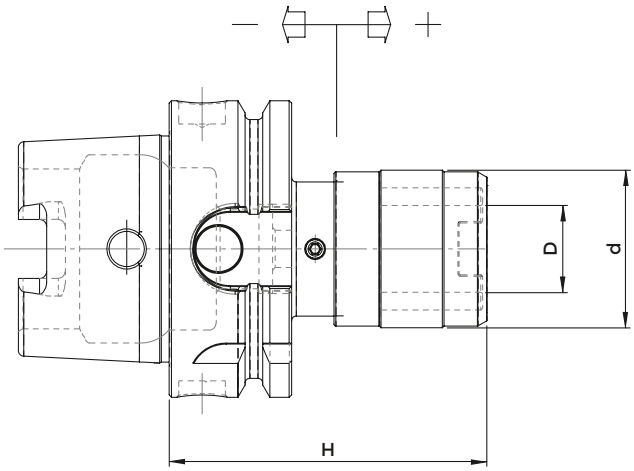

DIN 69893 A+C

COD.	DESCRIPTION	HSK	SIZE	TAP SIZE RANGE	RANGE	D	d	H
M801063	HSK63AH72GR1	63	1	M3-M12	- 7,5 + 7,5	19	48	72
M802063	HSK63AH110GR2	63	2	M6-M20	- 10 + 10	31	60	110
M801100	HSK100AH100GR2	100	1	M3÷M12	- 7,5 + 7,5	19	48	80
M802100	HSK100AH100GR2	100	2	M6÷M20	- 10 + 10	31	60	100
M803100	HSK100AH144GR3	100	3	M14÷M33	- 17,5 + 17,5	48	79	144

BLANK TOOLHOLDERS WITH SOFT SHANK

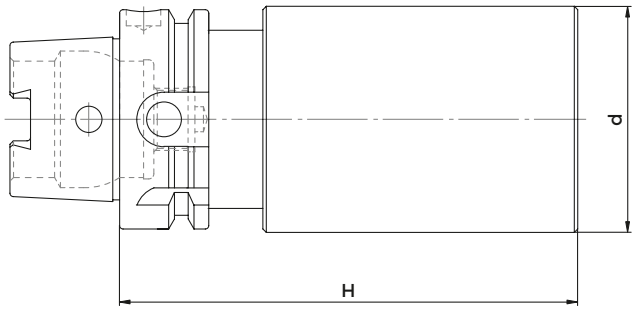

DIN 69893 A+C

COD.	DESCRIPTION	HSK	H	d
217-11712	HSK32AH150D35SM	32	150	35
217-11701	HSK40AH150D40SM	40	150	40
217-11702	HSK40AH200D52SM	40	200	52
217-11703	HSK50AH200D52SM	50	200	52
217-11704	HSK50AH200D63SM	50	200	63
217-11783	HSK63AH160D63SM	63	160	63
217-11705	HSK63AH250D63SM	63	250	63
217-11784	HSK63AH160D80SM	63	160	80
217-11706	HSK63AH250D80SM	63	250	80
217-11709	HSK100AH200D63SM	100	200	63
217-11710	HSK100AH250D80SM	100	250	80
217-11711	HSK100AH300D90SM	100	300	90

HSK E CHUCKS

DIN 69893-5

TAPER SHANKS DATA SHEET

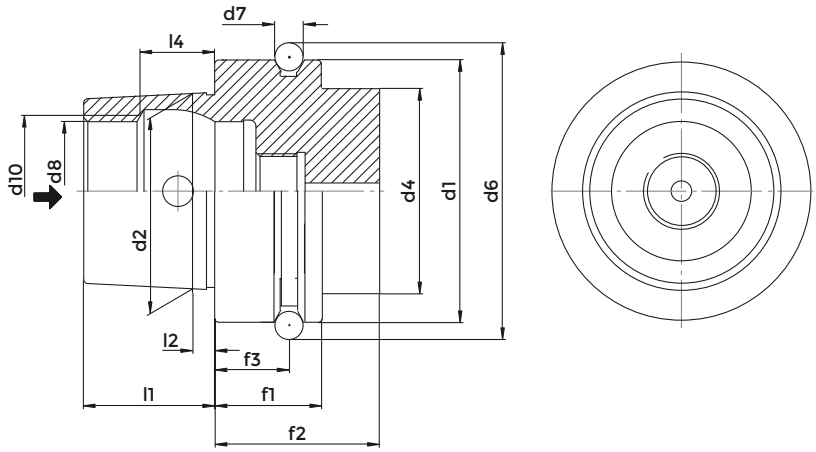

DIN 69893 E

	HSK 25	HSK 32	HSK 40	HSK 50	HSK 63
d1	25	32	40	50	63
d2	19	24	30	38	48
d4	20	26	34	42	53
d6	28,5	37	45	59,3	72,3
d7	3	4	4	7	7
d8	14	17	21	26	34
d10	15	19	23	29	37
f1	10	20	20	26	26
f2	20	35	35	42	42
f3	4,5	16	16	18	18
l1	13	16	20	25	32
l2	2,5	3,2	4	5	6,3
l4	7,21	8,92	11,42	14,13	18,13

FORM E

- Used for high frequency spindles and wood machining.
- Rotationally symmetrical, without key slots.
- Torque transmission via friction
- Central coolant supply possible through coolant channel.

CONE TOLERANCE

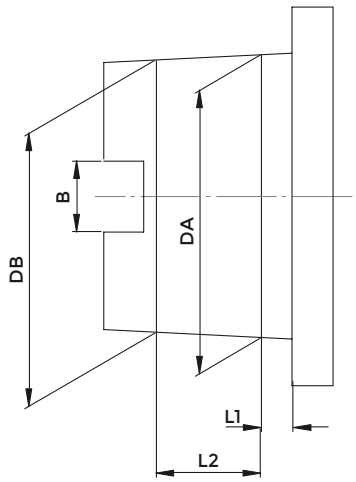

DIN 69893 E

HSK	L1	L2	DA	DB	B (only tipe A+C)
25 A+C+E	2,5	8,5	19 +0,005 +0,007	18,15 +0,003 +0,005	6.05 +/- 0.04
32 A+C	3,2	7,03	24 +0.005 +0.007	23,27 +0.003 +0.005	7.05 +/- 0.04
40 A+C+E	4	9,05	30 +0.005 +0.007	29,05 +0.003 +0.005	8.05 +/- 0.04
40 B+D	3,2	7,03	24 +0.005 +0.007	23,27 +0.003 +0.005	-
50 A+C+E	5	11	38 +0.006 +0.009	36,9 +0.003 +0.006	10.54 +/- 0.04
50 B+D+F	4	9,05	30 +0.005 +0.007	29,05 +0.003 +0.005	-
63 A+C+E	6,3	14,07	48 +0.007 +0.011	46,53 +0.003 +0.007	12.54 +/- 0.04
63 B+D+F	5	11	38 +0.006 +0.009	39,9 +0.003 +0.006	-
100 A+C	10	24	75 +0.009 +0.015	72,6 +0.003 +0.009	20.02 +/- 0.04
100 B+D	8	19	60 +0.008 +0.013	58,1 +0.003 +0.008	-

TECHNICAL DATA
KINTEK CHUCKS WITH ISO FITTING

All KINTEK toolholders are manufactured according to DIN norms. (these norms provide the same classes of tolerance for the attachment DIN69893 A+C, B+D, E, F)

COLLET CHUCK RUNOUT ACCURACY

The norm DIN 69882-6 permits a runout error of 0,005 mm. for DIN6499/ISO15488 collet chucks.

SHELL END MILL ADAPTOR RUNOUT ACCURACY

Our shell end mill adaptors meet the requirements of the norm DIN 69882-2, which prescribes for diameters Ø 16,22,27,32 a runout accuracy of 0,01.

WELDON END MILL HOLDER RUNOUT ACCURACY

According to norm DIN 69882-4 Weldon end mill holders have to meet the following requirements:

BORE: H5
RUNOUT ACCURACY: 0.005.

CONSTRUCTIVE FEATURES

- Manufactured with Casehardening Steel.
- Casehardened with depth 0,4 - 0,5 mm
- Hardened-Tempered
- Hardness HRC 58+-2, Strength 800-1000 N/mm²
- Black oxided
- Thread of collet nuts, internal and external diameters are completely grinding finished
- Tested 100% with certified measuring instruments

END MILL HOLDERS WELDON - HIGH SPEED LINE

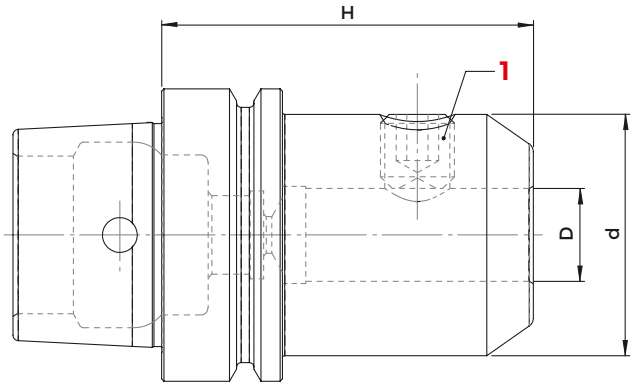

DIN 69893 A+C - DIN 1835/B

HIGH SPEED LINE

COD.	DESCRIPTION	HSK	D	d	H	G2.5 25000	1 SCREW
213-17341	HSK50EH80W20	50	20	52	80	•	811-106007
213-17313	HSK50EH105W25	50	25	65	105	•	811-106008
213-17315	HSK63EH65W08	63	8	28	65	•	811-106002
213-17317	HSK63EH80W16	63	16	48	80	•	811-106006
213-17342	HSK63EH80W20	63	20	52	80	•	811-106007
213-17319	HSK63EH105W25	63	25	65	105	•	811-106008
213-17323	HSK63EH110W32	63	32	72	110	•	811-106009

FACE MILL HOLDERS-TENONS DRIVE

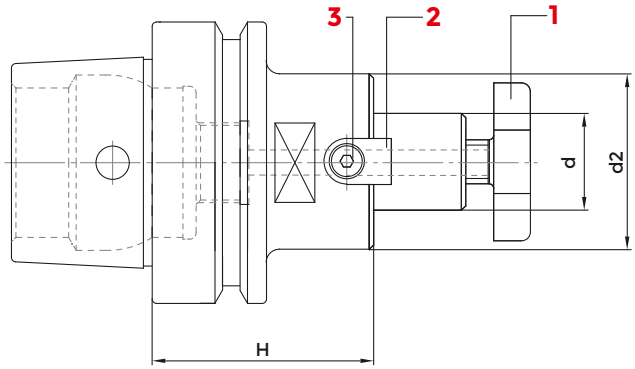

DIN 69893 E - ISO 3937

COD.	DESCRIPTION	HSK	H	d	d2	G6.3 8000	1 CROSS SCREW	1 CROSS SCREW ON ENQUIRY	2 DOWELS	3 SCREW	WRENCH
216-77301	HSK40EH45D16F	40	45	16	38	•	811-107003	811-107013	814-202280	811-101004	816-130002
216-77302	HSK40EH50D22F	40	50	22	48	•	811-107004	811-107014	814-202250	811-101011	816-130003
216-77316	HSK50EH50D16F	50	50	16	38	•	811-107003	811-107013	814-202280	811-101004	816-130002
216-77317	HSK50EH60D22F	50	60	22	48	•	811-107004	811-107014	814-202250	811-101011	816-130003
216-77318	HSK50EH60D27F	50	60	27	58	•	811-107005	811-107015	814-202270	811-101018	816-130004
216-77309	HSK63EH50D22F	63	50	22	48	•	811-107004	811-107014	814-202250	811-101011	816-130003
216-77319	HSK63EH100D22F	63	100	22	48	•	811-107004	811-107014	814-202250	811-101011	816-130003
216-77310	HSK63EH55D27F	63	55	27	58	•	811-107005	811-107015	814-202270	811-101018	816-130004
216-77320	HSK63EH60D27F	63	60	27	58	•	811-107005	811-107015	814-202270	811-101018	816-130004
216-77321	HSK63EH100D27F	63	100	27	58	•	811-107005	811-107015	814-202270	811-101018	816-130004

ACCESSORIES

p. 693

p. 695

p. 694

BLANK TOOLHOLDERS WITH SOFT SHANK

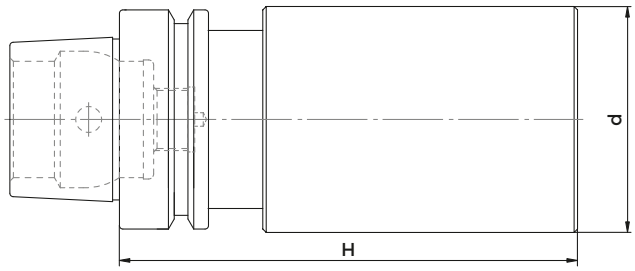

DIN 69893 E

COD.	DESCRIPTION	HSK	H	d
217-17303	HSK63EH200D63SM	63	200	63

ER MINI COLLET CHUCKS - HIGH SPEED LINE

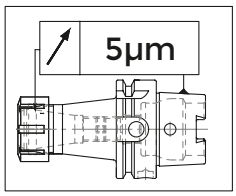

H= 0 > 100 mm - 5 µm
H= 100 > 200 mm - 10 µm

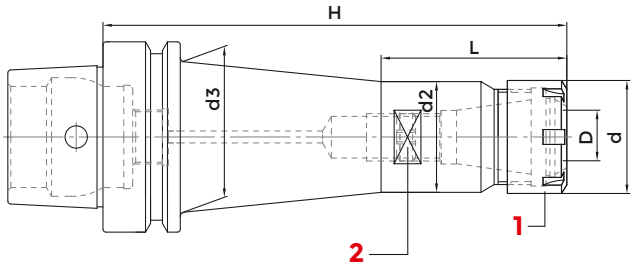

DIN 6499 - ISO 15488

HIGH SPEED LINE

COD.	DESCRIPTION	HSK	H	D	d	ER	L	d2	d3	G2.5 30000	1 NUT	2 SCREW	WRENCH
214-37344	HSK25EH43ER16M	25	43	0,5÷10	22	16M	-	19	-	•	812-203013	811-303119	816-203009
214-37377	HSK32EH60ER16M	32	60	0,5÷10	22	16M	-	20	-	•	812-203013	811-303119	816-203009
214-37378	HSK32EH60ER25M	32	60	1÷16	35	25M	-	30	-	•	812-203015	811-303121	816-203011
214-37301	HSK40EH70ER16M	40	70	0,5÷10	22	16M	-	20	-	•	812-203013	811-303119	816-203009
214-37311	HSK40EH120ER16M	40	120	0,5÷10	22	16M	47	20	29	•	812-203013	811-303119	816-203009
214-37302	HSK40EH80ER25M	40	80	1÷16	35	25M	-	34	-	•	812-203015	811-303121	816-203011
214-37303	HSK50EH80ER16M	50	80	0,5÷10	22	16M	-	20	-	•	812-203013	811-303119	816-203009
214-37313	HSK50EH150ER16M	50	150	0,5÷10	22	16M	47	20	40	•	812-203013	811-303119	816-203009
214-37306	HSK63EH90ER16M	63	90	0,5÷10	22	16M	-	20	-	•	812-203013	811-303119	816-203009
214-37316	HSK63EH160ER16M	63	160	0,5÷10	22	16M	47	20	39	•	812-203013	811-303119	816-203009

ACCESSORIES

p. 648

p. 631

p. 652

ER COLLET CHUCKS - HIGH SPEED LINE

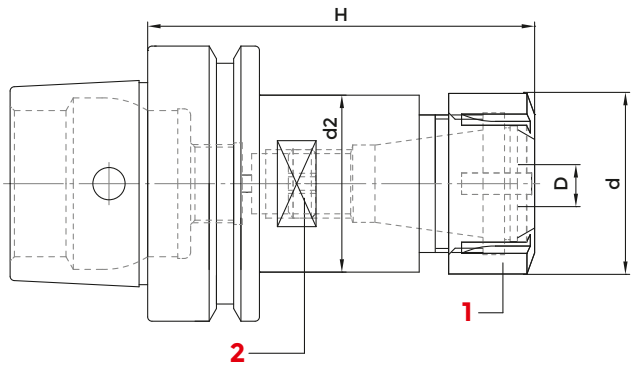

DIN 6499 - ISO 15488

HIGH SPEED LINE

COD.	DESCRIPTION	HSK	H	D	d	ER	d2	G2.5 30000	1 NUT	2 SCREW
214-37386	HSK40EH65ER32	40	65	2÷20	50	32	33	•	812-203002	-
214-37304	HSK50EH95ER25	50	95	1÷16	42	25	41,5	•	812-203001	0190
214-37305	HSK50EH100ER32	50	100	2÷20	50	32	42	•	812-203002	-
214-37387	HSK63EH70ER25	63	70	1÷16	42	25	41	•	812-203001	-
214-37307	HSK63EH90ER25	63	90	1÷16	35	25	42	•	812-203001	0190
214-37388	HSK63EH100ER25	63	100	1÷16	42	25	41	•	812-203001	0190
214-37389	HSK63EH75ER32	63	75	2÷20	50	32	49	•	812-203002	-
214-37308	HSK63EH100ER32	63	100	2÷20	50	32	49,5	•	812-203002	811-303118
214-37309	HSK63EH80ER40	63	80	3÷30	63	40	50	•	812-203003	-

ACCESSORIES

p. 649

p. 631

p. 653

READY, ALWAYS.

HSK F CHUCKS

DIN 69893-6

TAPER SHANKS DATA SHEET

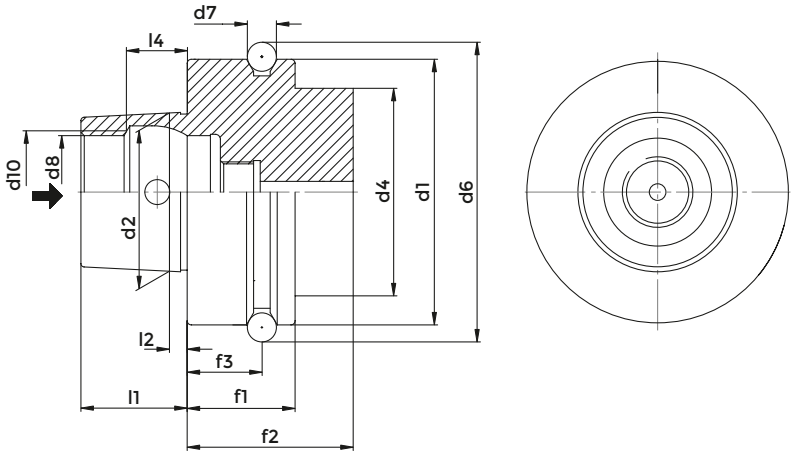

DIN 69893 F

	HSK 50	HSK 63
d1	50	63
d2	30	38
d4	42	53
d6	59,3	72,3
d7	7	7
d8	21	26
d10	23	29
f1	26	26
f2	42	42
f3	18	18
l1	20	25
l2	4	5
l4	11,42	14,13

FORM F

- Used for high frequency spindles and wood machining.
- With larger collar.
- Central coolant supply possible trough coolant hose.

CONE TOLERANCE

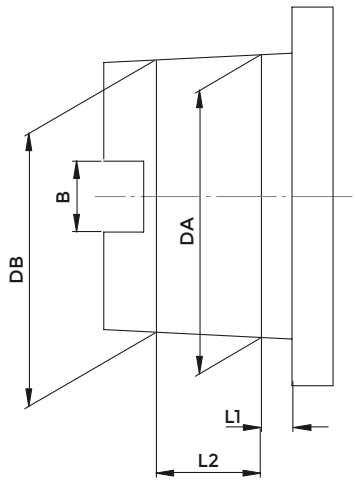

DIN 69893 F

HSK	L1	L2	DA	DB	B (only type A+C)
32 A+C	3,2	7,3	24 +0.005 +0.007	23,27 +0.003 +0.005	7.05 +/- 0.04
40 A+C+E	4	9,5	30 +0.005 +0.007	29,05 +0.003 +0.005	8.05 +/- 0.04
40 B+D	3,2	7,3	24 +0.005 +0.007	23,27 +0.003 +0.005	-
50 A+C+E	5	11	38 +0.006 +0.009	36,9 +0.003 +0.006	10.54 +/- 0.04
50 B+D+F	4	9,5	30 +0.005 +0.007	29,05 +0.003 +0.005	-
63 A+C+E	6,3	14,7	48 +0.007 +0.011	46,53 +0.003 +0.007	12.54 +/- 0.04
63 B+D+F	5	11	38 +0.006 +0.009	36,9 +0.003 +0.006	-
100 A+C	10	24	75 +0.009 +0.015	72,6 +0.003 +0.009	20.02 +/- 0.04
100 B+D	8	19	60 +0.008 +0.013	58,1 +0.003 +0.008	-

TECHNICAL DATA
KINTEK CHUCKS WITH ISO FITTING

All KINTEK toolholders are manufactured according to DIN norms. (these norms provide the same classes of tolerance for the attachment DIN69893 A+C, B+D, E, F)

COLLET CHUCK RUNOUT ACCURACY

The norm DIN 69882-6 permits a runout error of 0,005 mm. for DIN6499/ISO15488 collet chucks.

SHELL END MILL ADAPTOR RUNOUT ACCURACY

Our shell end mill adaptors meet the requirements of the norm DIN 69882-2, which prescribes for diameters Ø 16,22,27,32 a runout accuracy of 0,01

WELDON END MILL HOLDER RUNOUT ACCURACY

According to norm DIN 69882-4 Weldon end mill holders have to meet the following:

BORE: H5
RUNOUT ACCURACY: 0.005.

CONSTRUCTIVE FEATURES

- Manufactured with Casehardening Steel.
- Casehardened with depth 0,4 - 0,5 mm
- Hardened-Tempered
- Hardness HRC 58+-2, Strength 800-1000 N/mm^2
- Black oxided
- Thread of collet nuts, internal and external diameters are completely grinding finished
- Tested 100% with certified measuring instruments

ER MINI COLLET CHUCKS - HIGH SPEED LINE

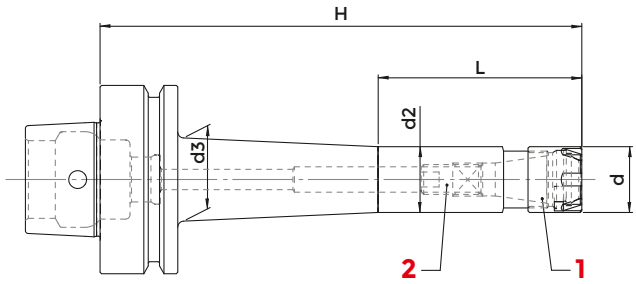

DIN 69893F - DIN 6499/ISO 15488

HIGH SPEED LINE

COD.	DESCRIPTION	HSK	H	D	d	ER	L	d2	d3	G2.5 30000	1 NUT	2 SCREW	WRENCH
214-37401	HSK50FH80ER16M	50	80	0,5÷10	22	16M	-	21,5	-	•	812-203013	811-303119	816-203009
214-37404	HSK63FH100ER16M	63	100	0,5÷10	22	16M	47	21,5	26	•	812-203013	811-303119	816-203009
214-37449	HSK63FH100ER20M	63	100	1÷15	28	20M	-	27	-	•	812-203014	811-106013	816-203010
214-37450	HSK63FH100ER25M	63	100	1÷16	35	25M	-	33	-	•	812-203015	811-303121	816-203011
214-37412	HSK63FH160ER25M	63	160	1÷16	35	25M	68	35	46	•	812-203015	811-303121	816-203011
214-37411	HSK63FH160ER16M	63	160	0,5÷10	22	16M	57	20	28	•	812-203013	811-303119	816-203009

ACCESSORIES

p. 648

p. 631

p. 652

END MILL HOLDERS WELDON - HIGH SPEED LINE

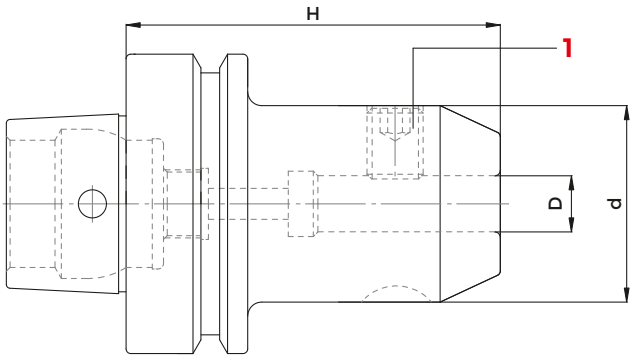

DIN 69893F - DIN 1835/B

HIGH SPEED LINE

COD.	DESCRIPTION	HSK	H	D	d	G2.5 25000	1 SCREW
213-17403	HSK50FH70WE10	50	70	10	40	•	811-106004
213-17404	HSK50FH80WE12	50	80	12	48	•	811-106005
213-17422	HSK63FH65WE06	63	65	6	25	•	811-106001
213-17408	HSK63FH65WE08	63	65	8	28	•	811-106002
213-17424	HSK63FH65WE10	63	65	10	35	•	811-106004
213-17410	HSK63FH80WE12	63	80	12	42	•	811-106005
213-17411	HSK63FH80WE16	63	80	16	48	•	811-106006
213-17412	HSK63FH85WE20	63	85	20	52	•	811-106007
213-17413	HSK63FH110WE25	63	110	25	65	•	811-106008
213-17414	HSK63FH110WE32	63	110	32	72	•	811-106009

ER COLLET CHUCKS - HIGH SPEED LINE

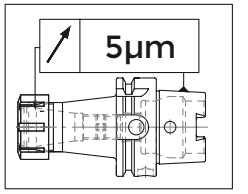

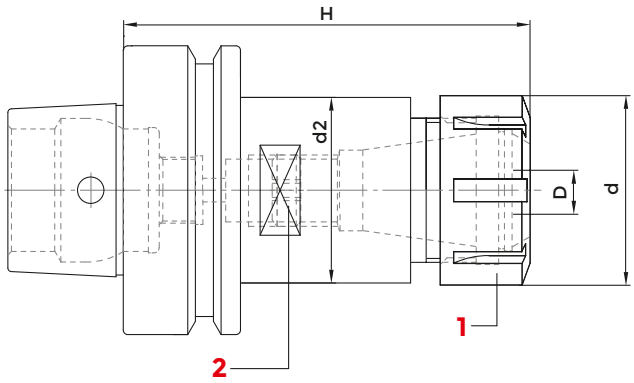

H= 0 > 100 mm - 5 µm
H= 100 > 200 mm - 10 µm

DIN 69893 F - DIN 6499/ISO 15488

HIGH SPEED LINE

COD.	DESCRIPTION	HSK	H	D	d	ER	L	d2	d3	G2.5 30000	1 NUT	2 SCREW	WRENCH
214-37402	HSK50FH80ER25	50	80	1÷16	42	25	-	32	-	•	812-203001	811-303121	816-203001
214-37448	HSK50FH73ER32	50	73	2÷20	50	32	-	40	-	•	812-203002	811-303118	816-203002
214-37403	HSK50FH100ER32	50	100	2÷20	50	32	-	40	-	•	812-203002	811-303118	816-203002
214-37452	HSK63FH120ER16	63	120	1÷12	32	16	-	28	-	•	812-203005	811-102038	816-203000
214-37453	HSK63FH160ER16	63	160	1÷12	32	16	-	28	-	•	812-203005	811-102038	816-203000
214-37454	HSK63FH100ER20	63	100	1÷15	35	20	-	34	-	•	812-203006	811-102046	816-203005
214-37455	HSK63FH120ER20	63	120	1÷15	35	20	-	34	-	•	812-203006	811-102046	816-203005
214-37456	HSK63FH160ER20	63	160	1÷15	35	20	-	34	-	•	812-203006	811-102046	816-203005
214-37457	HSK63FH73ER25	63	73	1÷16	42	25	-	41,5	-	•	812-203001	811-303121	816-203001
214-37405	HSK63FH100ER25	63	100	1÷16	42	25	-	41,5	-	•	812-203001	811-303121	816-203001
214-37458	HSK63FH120ER25	63	120	1÷16	42	25	-	41,5	-	•	812-203001	811-303121	816-203001
214-37459	HSK63FH160ER25	63	160	1÷16	42	25	-	41,5	-	•	812-203001	811-303121	816-203001
214-37429	HSK63FH73ER32	63	73	2÷20	50	32	-	49,5	-	•	812-203002	811-303118	816-203002
214-37406	HSK63FH100ER32	63	100	2÷20	50	32	-	49,5	-	•	812-203002	811-303118	816-203002
214-37460	HSK63FH120ER32	63	120	0,5÷10	22	32	57	21,5	35	•	812-203013	811-303119	816-203009
214-37413	HSK63FH160ER32	63	160	2÷20	50	32	-	49,5	-	•	812-203002	811-303118	816-203002
214-37407	HSK63FH80ER40	63	80	3÷30	63	40	-	50	-	•	812-203003	-	816-203003
214-37408	HSK63FH120ER40	63	120	3÷30	63	40	-	50	-	•	812-203003	-	816-203003
214-37444	HSK63FH160ER40	63	160	3÷30	63	40	-	50	-	•	812-203003	-	816-203003

ACCESSORIES

p. 649

p. 631

p. 653

BLANCK TOOLHOLDERS WITH SOFT SHANK

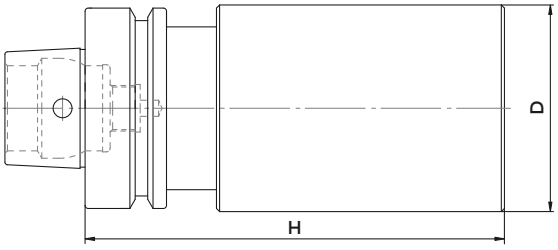

DIN 69893 F

COD.	DESCRIPTION	HSK	H	d
217-17402	HSK63FH200D63SM	63	200	63

MORSE TAPER MILL ADAPTERS WITH INTERNAL COOLANT

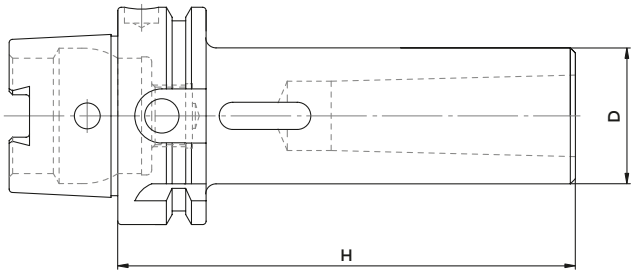

DIN 69893 F - ISO 3937

COD.	DESCRIPTION	HSK	CM	d	H
212-47405	HSK63FH120CM2P	63	2	32	120
212-47406	HSK63FH140CM3P	63	3	40	140
212-47407	HSK63FH165CM4P	63	4	48	165

FACE MILL HOLDERS-TENONS DRIVE

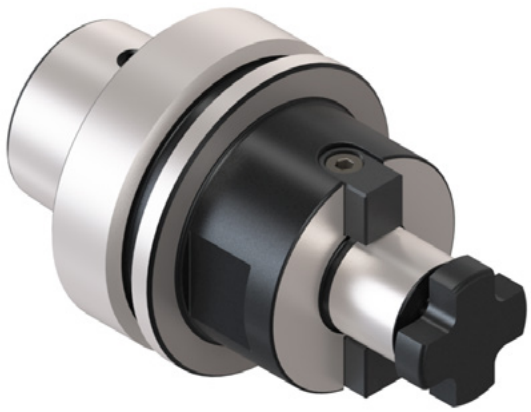

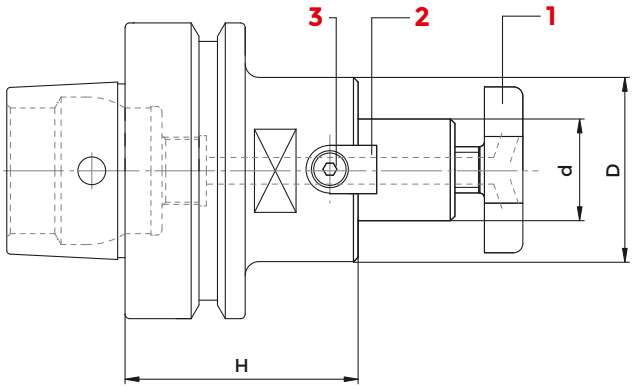

DIN 69893 F - ISO 3937

COD.	DESCRIPTION	HSK	H	d	d2	G6.3 15000	1 CROSS SCREW	1 CROSS SCREW ON ENQIRY	2 DOWELS	3 SCREW	WRENCH
216-77413	HSK50FH50D16F	50	50	16	38	•	811-107003	811-107013	814-202280	811-101004	816-130002
216-77402	HSK50FH50D22F	50	50	22	48	•	811-107004	811-107014	814-202250	811-101011	816-130003
216-77414	HSK50FH50D27F	50	50	27	58	•	811-107005	811-107015	814-202270	811-101018	816-130004
216-77404	HSK63FH45D16F	63	45	16	38	•	811-107003	811-107013	814-202280	811-101004	816-130002
216-77416	HSK63FH100D16F	63	100	16	38	•	811-107003	811-107013	814-202280	811-101004	816-130002
216-77405	HSK63FH50D22F	63	50	22	48	•	811-107004	811-107014	814-202250	811-101011	816-130003
216-77417	HSK63F100D22F	63	100	22	48	•	811-107004	811-107014	814-202250	811-101011	816-130003
216-77406	HSK63FH55D27F	63	55	27	58	•	811-107005	811-107015	814-202270	811-101018	816-130004
216-77418	HSK63FH100D27F	63	100	27	58	•	811-107005	811-107015	814-202270	811-101018	816-130004
216-77407	HSK63FH60D32F	63	60	32	78	•	811-107006	811-107016	814-202630	811-101029	816-130005
216-77419	HSK63FH100D32F	63	100	32	66	•	811-107006	811-107016	814-202630	811-101029	816-130005
216-77415	HSK63FH60D40F	63	60	40	80	•	811-107007	811-107017	814-202710	811-101029	816-130006
216-77420	HSK63FH100D40F	63	100	40	80	•	811-107007	811-107017	814-202710	811-101029	816-130006

ACCESSORIES

p. 693

p. 695

p. 694

COMBI-SHELL MILL ADAPTORS

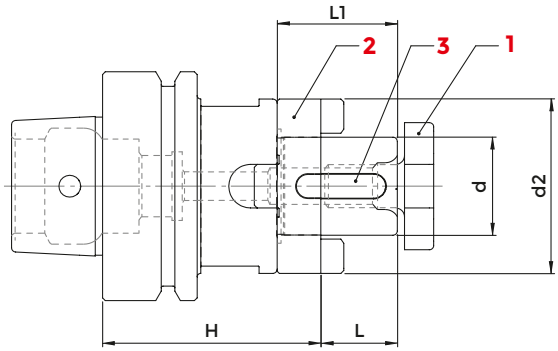

DIN 69893 F

COD.	DESCRIPTION	HSK	H	d	d2	L	L1	G6,3 8000	1 RING	2 CROSS SCREW	3 KEY	WRENCH
216-17404	HSK63FH60D16C	63	60	16	32	17	27	•	811-107003	814-30001	814-201010	816-130002
216-17405	HSK63FH60D22C	63	60	22	40	19	31	•	811-107004	814-30002	814-201020	816-130003
216-17406	HSK63FH60D27C	63	60	27	48	21	33	•	811-107005	814-30003	814-201030	816-130004
216-17407	HSK63FH60D32C	63	60	32	58	24	38	•	811-107006	814-30004	814-201040	816-130005
216-17408	HSK63FH70D40C	63	70	40	70	27	41	•	811-107007	814-30005	814-201050	816-130006

END MILL HOLDERS FOR MILLING CUTTERS WITH THREADED SHANKS

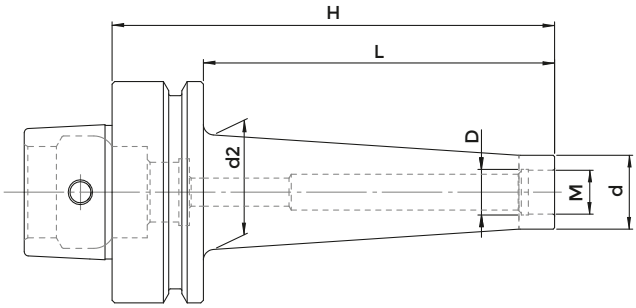

DIN 69893 F

HIGH SPEED LINE

COD.	DESCRIPTION	HSK	M	D	d	d2	H	L	G2,5 25000
217-87407	HSK63FH84M8	63	M8	8,5	13	23	84	50	•
217-87408	HSK63FH84M10	63	M10	10,5	18	23	84	50	•
217-87409	HSK63FH109M10	63	M10	10,5	18	28	109	75	•
217-87410	HSK63FH84M12	63	M12	12,5	21	24	84	50	•
217-87411	HSK63FH134M12	63	M12	12,5	21	33	134	100	•
217-87412	HSK63FH59M16	63	M16	17	29	34	59	33	•
217-87413	HSK63FH84M16	63	M16	17	29	34	84	50	•
217-87414	HSK63FH109M16	63	M16	17	29	34	109	75	•
217-87415	HSK63FH134M16	63	M16	17	29	36	134	100	•

COOLANT SUPPLY UNIT

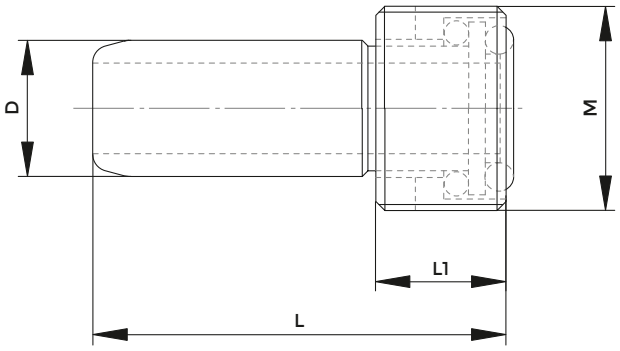

COD.	HSK	M	d	L	L1
832-016010	A+C32, B+D40	M10x1	6	26	5,5
832-016020	A+C40, B+D50, E40, F50	M12x1	8	29,3	7,5
832-016030	A+C50, B+D63, E50, F63	M16x1	10	33	9,5
832-016040	A+C63, E63	M18x1	12	36,6	11,5
832-016050	B+D100-80A	M20x1,5	14	40	13,5
832-016060	A+C100	M24x1,5	16	44	15,5

KEY FOR COOLANT SUPPLY UNIT

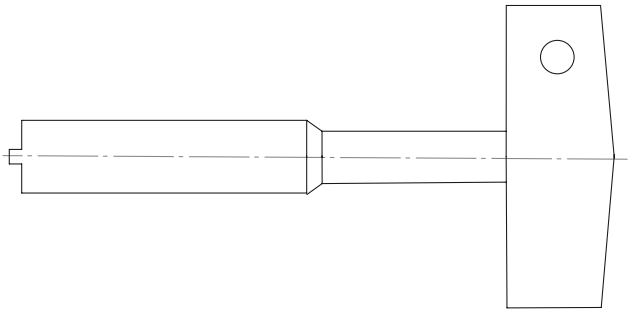

COD.	HSK
0470	32
816-204022	40
816-204023	50
816-204024	63
816-204025	100

SK CHUCKS
DIN 69871

TAPER SHANKS DATA SHEET

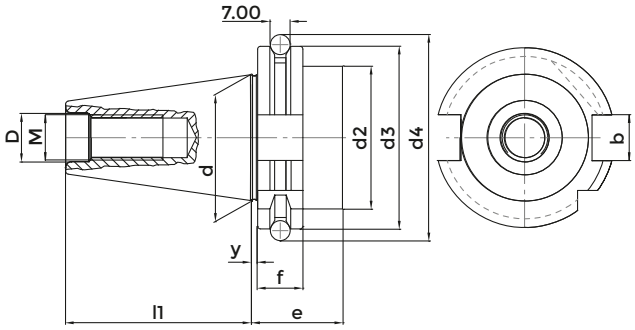

DIN 69871 - SK - SHAPE A

ISO	d	l1	D	M	y	d2	f	d3	d4	e	b
30	31,75	47,8	13	M12	3,2	45	15,9	50	59,3	35	16,1
40	44,45	68,4	17	M16	3,2	50	15,9	63,55	72,3	35	16,1
45	57,15	82,7	21	M20	3,2	63	15,9	82,55	91,35	35	19,3
50	69,85	101,75	25	M24	3,2	80	15,9	97,5	107,25	35	25,7

TECHNICAL FEATURES KINTEK SK TOOLHOLDERS

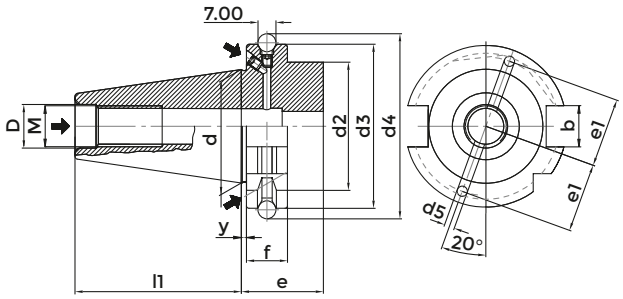

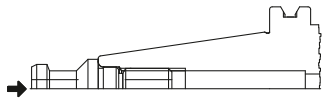

AD SHAPE

B SHAPE

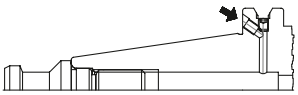

DIN 69871 - SK - SHAPE AD / B

ISO	d	l1	D	M	y	d2	f	d3	d4	e	b	d5	e1
40	44,45	68,4	17	M16	3,2	50	15,9	63,55	72,3	35	16,1	4	27
45	57,15	82,7	21	M20	3,2	63	15,9	82,55	91,35	35	19,3	6	35
50	69,85	101,75	26	M24	3,2	80	15,9	97,5	107,25	35	25,7	5	42

For coolant through V-flange bores (B) or center of toolholders (AD). For central coolant, the V-flange channels are closed by socket screws.

TECHNICAL FEATURES KINTEK SK TOOLHOLDERS

DIN 69871 A DIN 69871 AD/B

All Kintek Toolholders are manufactured according to DIN norm.

COLLET CHUCK RUNOUT ACCURACY

The norm DIN6391 permits a runout error between external cone and internal cone / collet seat of 0.016. Our production has a runout accuracy which is guaranteed to be within 0,003 / 0,010 m at the tool seat.

SHELL END MILL ADAPTOR RUNOUT ACCURACY

Our shell end mill adaptors meet the requirements of the norm DIN6358, which prescribes for diameters 16-22-27-32-40 a runout accuracy of: 0,01 for SK 30/40 0,015 for SK 50.

SHELL END MILL ADAPTOR'S RUNOUT ACCURACY

According to the norm DIN6359-1 Weldon end mill holders have to meet the following requirements:
BORE: H5 tolerance
RUNOUT ACCURACY: < 0.01 (for SK 40)
Our end mill adaptors ensure the prescribed holes' tolerance and have a runout accuracy which is normally 0.005.

BALANCING

The major part of toolholders of this category can run up to 8000 rpm grade G 6,3 or 12000 rpm. Besides the descriptive and dimensional table of products, you can find the addictive balancing grade.

CONSTRUCTIVE FEATURES

- Manufactured with Casehardening Steel.
- Casehardened with depth 0,6 - 0,8 mm
- Hardened-Tempered
- Hardness HRC 58+-2, Strength 800-1000 N/mm^2
- Black oxided
- Internal and external grinding finished.

NEW HIGH-SPEED BALANCING TOOLHOLDERS

The new high-speed toolholders are balanced in the Grade G 2,5 at 25000 rpm.

CONSTRUCTIVE FEATURES FOR HIGH-SPEED TOOLHOLDERS

- Manufactured with casehardening Steel.
- Casehardened with depth 0,6 - 0,8 mm
- Hardened-Tempered
- Hardness HRC 58+-2, Strength 800-1000 N/mm^2
- Black oxided
- Internal and external grinding finish of the cone
- Grinding finish on the front side and on the thread of collet nuts.
- Tested 100% with certified measuring instruments and supplied with balancing certificate

CONE TOLERANCE

ACCORDING TO THE CLASS AT3.

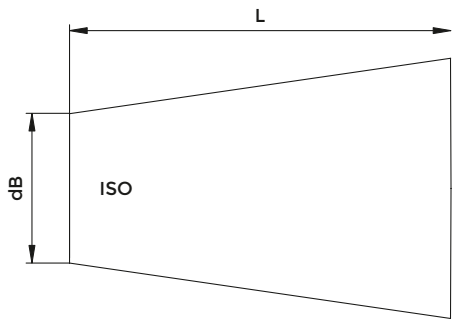

ISO	L	dA-dB	AT3
30	42	12.250	+0.002
40	59	17.208	+0.003
45	73	21.292	+0.003
50	92	26.833	+0.004

SHORT TYPE END MILL HOLDERS

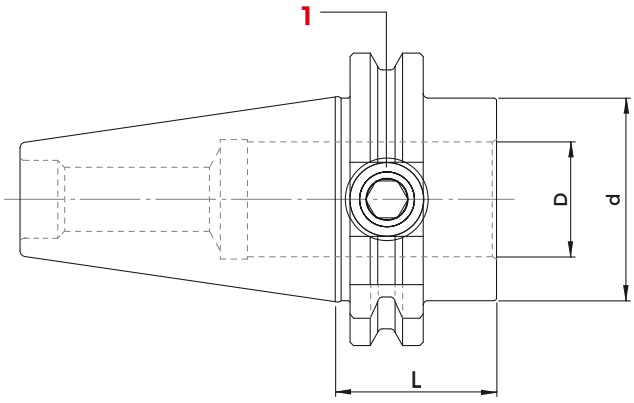

DIN69871

COD. (AD)	COD. (AD+B)	DESCRIPTION	ISO	D	L	d	G6,3 12000	1 SCREW 1	SCREW 2
3079	8341	TC 40 - WE 12 / H 35	40	12	35	44	•	811-106005	-
263-11322	2231	TC 40 - WE 16 / H 35	40	16	35	44	•	0068	-
263-11323	2242	TC 40 - WE 20 / H 35	40	20	35	44	•	811-106032	-
263-11324	-	TC 40 - WE 25 / H 35	40	25	35	44	•	811-106014	-
263-11325	4641	TC 40 - WE 25 / H 60	40	25	60	49	•	811-106014	811-106014
3083	-	TC 40 - WE 32 / H 40	40	32	40	44	•	0074	-
263-11326	4643	TC 40 - WE 32 / H 70	40	32	70	72	•	811-106026	811-106009
263-11327	2234	TC 50 - WE 16 / H 35	50	16	35	70	•	811-106006	-
263-11328	2237	TC 50 - WE 20 / H 35	50	20	35	70	•	811-106007	-
263-11329	2251	TC 50 - WE 25 / H 35	50	25	35	70	•	811-106008	-
263-11330	2252	TC 50 - WE 32 / H 35	50	32	35	80	•	811-106009	-
3136	8345	TC 50 - WE 40 / H 35	50	40	35	80	•	0259	-

WELDON END MILL HOLDERS

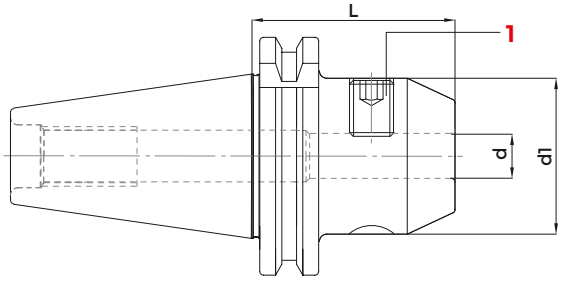

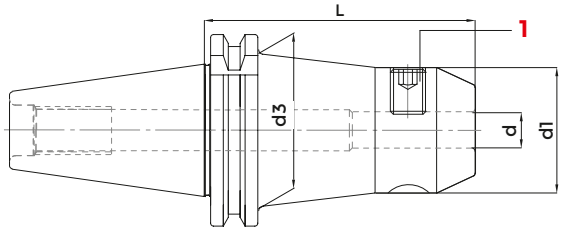

DIN69871 AD - DIN 1835 B

COD. (AD)	COD. (AD+B)	DESCRIPTION	ISO	d	L	d1	d3	G6,3 12000	1 SCREW
263-11201	-	TC 30 - WE 6 / H 45	30	6	45	25	-	•	811-106001
263-11202	-	TC 30 - WE 8 / H 45	30	8	45	28	-	•	811-106002
263-11203	-	TC 30 - WE 10 / H 50	30	10	50	35	-	•	811-106004
263-11204	-	TC 30 - WE 12 / H 50	30	12	50	42	-	•	811-106005
263-11205	-	TC 30 - WE 16 / H 70	30	16	70	48	-	•	811-106006
263-11206	-	TC 30 - WE 20 / H 70	30	20	70	52	-	•	811-106007
213-11326	4761	TC 40 - WE 6 / H 50	40	6	50	25	-	•	811-106001
213-11344	5028	TC 40 - WE 6 / H 100	40	6	100	25	35	•	811-106001
5400	5416	TC 40 - WE 6 / H 130	40	6	130	25	35	•	811-106001
213-11362	5551	TC 40 - WE 6 / H 160	40	6	160	25	35	•	811-106001
263-11303	4144	TC 40 - WE 6 / H 200	40	6	200	25	38	•	811-106001
213-11327	4762	TC 40 - WE 8 / H 50	40	8	50	28	-	•	811-106002
213-11345	5029	TC 40 - WE 8 / H 100	40	8	100	28	38	•	811-106002
5401	5417	TC 40 - WE 8 / H 130	40	8	130	28	38	•	811-106002
213-11363	5552	TC 40 - WE 8 / H 160	40	8	160	28	38	•	811-106002
263-11304	4146	TC 40 - WE 8 / H 200	40	8	200	28	41	•	811-106002
213-11328	4763	TC 40 - WE 10 / H 50	40	10	50	35	-	•	811-106004
213-11346	5030	TC 40 - WE 10 / H 100	40	10	100	35	40	•	811-106004
5402	5418	TC 40 - WE 10 / H 130	40	10	130	35	40	•	811-106004
213-11371	5553	TC 40 - WE 10 / H 160	40	10	160	35	40	•	811-106004
263-11305	4148	TC 40 - WE 10 / H 200	40	10	200	35	43	•	811-106004
213-11329	4764	TC 40 - WE 12 / H 50	40	12	50	42	-	•	811-106005
213-11347	5031	TC 40 - WE 12 / H 100	40	12	100	42	-	•	811-106005
5403	5419	TC 40 - WE 12 / H 130	40	12	130	42	-	•	811-106005
213-11372	5554	TC 40 - WE 12 / H 160	40	12	160	42	-	•	811-106005
263-11306	4150	TC 40 - WE 12 / H 200	40	12	200	42	48	•	811-106005
213-11330	4765	TC 40 - WE 14 / H 50	40	14	50	44	-	•	811-106005
213-11348	5032	TC 40 - WE 14 / H 100	40	14	100	44	-	•	811-106005
4033	4155	TC 40 - WE 14 / H 130	40	14	130	44	-	•	811-106005
4034	4157	TC 40 - WE 14 / H 160	40	14	160	44	-	•	811-106005
213-11324	4766	TC 40 - WE 16 / H 63	40	16	63	48	-	•	811-106006
213-11349	5033	TC 40 - WE 16 / H 100	40	16	100	48	-	•	811-106006
5404	5420	TC 40 - WE 16 / H 130	40	16	130	48	-	•	811-106006
213-11360	5035	TC 40 - WE 16 / H 160	40	16	160	48	-	•	811-106006
263-11308	4159	TC 40 - WE 16 / H 200	40	16	200	48	-	•	811-106006
213-11331	4767	TC 40 - WE 18 / H 63	40	18	63	50	-	•	811-106006
213-11370	5036	TC 40 - WE 18 / H 100	40	18	100	50	-	•	811-106006

follows >>

WELDON END MILL HOLDERS

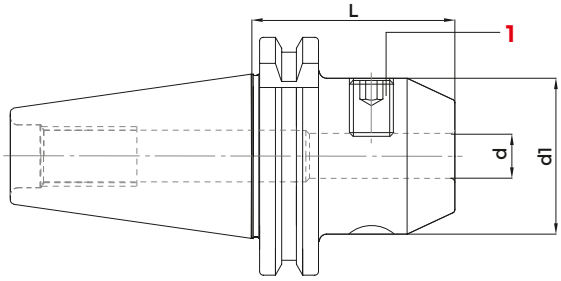

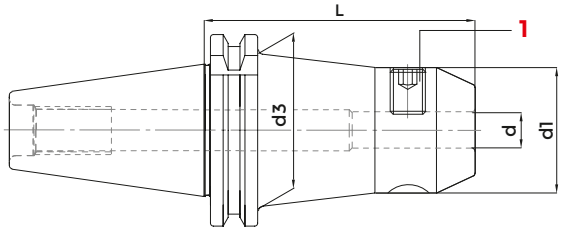

DIN69871 AD - DIN 1835 B

COD. (AD)	COD. (AD+B)	DESCRIPTION	ISO	d	L	d1	d3	G6,3 12000	1 SCREW
4037	4160	TC 40 - WE 18 / H 130	40	18	130	50	-	•	811-106006
213-11325	4768	TC 40 - WE 20 / H 63	40	20	63	52	-	•	811-106007
213-11350	5038	TC 40 - WE 20 / H 100	40	20	100	52	-	•	811-106007
5011	5039	TC 40 - WE 20 / H 130	40	20	130	52	-	•	811-106007
213-11361	5040	TC 40 - WE 20 / H 160	40	20	160	50	-	•	811-106007
263-11310	4164	TC 40 - WE 20 / H 200	40	20	200	50	-	•	811-106007
213-11323	4769	TC 40 - WE 25 / H 100	40	25	100	50	-	•	811-106008
5013	5041	TC 40 - WE 25 / H 130	40	25	130	50	-	•	811-106008
213-11396	5042	TC 40 - WE 25 / H 160	40	25	160	65	-	•	811-106008
263-11311	4166	TC 40 - WE 25 / H 200	40	25	200	65	-	•	811-106008
213-11332	4770	TC 40 - WE 32 / H 100	40	32	100	65	-	•	811-106009
5015	5043	TC 40 - WE 32 / H 130	40	32	130	65	-	•	811-106009
213-11397	5044	TC 40 - WE 32 / H 160	40	32	160	72	-	•	811-106009
263-11312	4168	TC 40 - WE 32 / H 200	40	32	200	72	-	•	811-106009
213-11393	4771	TC 40 - WE 40 / H 115	40	40	115	80	-	•	811-106009
3722	-	TC 45 - WE 6 / H 63	45	6	63	25	-	•	811-106001
3723	-	TC 45 - WE 8 / H 63	45	8	63	28	-	•	811-106002
3724	-	TC 45 - WE 10 / H 63	45	10	63	35	-	•	811-106004
3725	-	TC 45 - WE 12 / H 63	45	12	63	42	-	•	811-106005
3726	-	TC 45 - WE 16 / H 63	45	16	63	48	-	•	811-106006
3727	-	TC 45 - WE 20 / H 63	45	20	63	52	-	•	811-106007
3728	-	TC 45 - WE 25 / H 100	45	25	100	65	-	•	811-106008
3729	-	TC 45 - WE 32 / H 100	45	32	100	72	-	•	811-106009
4515	-	TC 45 - WE 40 / H 100	45	40	100	80	-	•	811-106009
213-11333	4783	TC 50 - WE 6 / H 63	50	6	63	25	-	•	811-106001
213-11351	5045	TC 50 - WE 6 / H 100	50	6	100	25	35	•	811-106001
5405	5426	TC 50 - WE 6 / H 130	50	6	130	25	35	•	811-106001
213-11364	5555	TC 50 - WE 6 / H 160	50	6	160	25	35	•	811-106001
263-11313	4173	TC 50 - WE 6 / H 200	50	6	200	25	38	•	811-106001
213-11334	4784	TC 50 - WE 8 / H 63	50	8	63	28	-	•	811-106002
213-11352	5046	TC 50 - WE 8 / H 100	50	8	100	28	38	•	811-106002
5406	5427	TC 50 - WE 8 / H 130	50	8	130	28	38	•	811-106002
213-11365	5556	TC 50 - WE 8 / H 160	50	8	160	28	38	•	811-106002
263-11314	4175	TC 50 - WE 8 / H 200	50	8	200	28	41	•	811-106002
213-11335	4785	TC 50 - WE 10 / H 63	50	10	63	35	-	•	811-106004
213-11353	5047	TC 50 - WE 10 / H 100	50	10	100	35	42	•	811-106004
5407	5428	TC 50 - WE 10 / H 130	50	10	130	35	42	•	811-106004

follows >>

WELDON END MILL HOLDERS

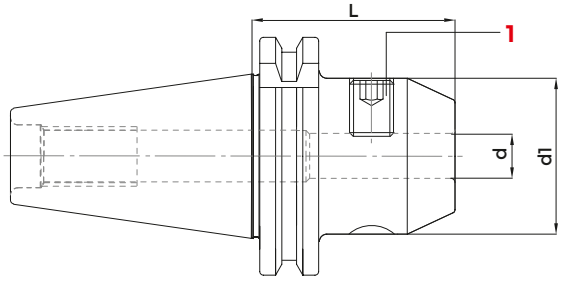

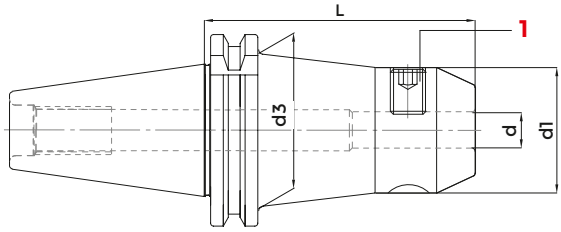

DIN69871 AD - DIN 1835 B

COD. (AD)	COD. (AD+B)	DESCRIPTION	ISO	d	L	d1	d3	G6,3 12000	1 SCREW
213-11366	5558	TC 50 - WE 10 / H 160	50	10	160	35	42	•	811-106004
263-11315	4177	TC 50 - WE 10 / H 200	50	10	200	35	45	•	811-106004
213-11336	4786	TC 50 - WE 12 / H 63	50	12	63	42	-	•	811-106005
213-11354	5559	TC 50 - WE 12 / H 100	50	12	100	42	48	•	811-106005
5408	5429	TC 50 - WE 12 / H 130	50	12	130	42	48	•	811-106005
213-11367	5048	TC 50 - WE 12 / H 160	50	12	160	42	48	•	811-106005
263-11316	4179	TC 50 - WE 12 / H 200	50	12	200	42	51	•	811-106005
213-11337	4787	TC 50 - WE 14 / H 63	50	14	63	44	-	•	811-106005
213-11355	5560	TC 50 - WE 14 / H 100	50	14	100	44	50	•	811-106005
4130	4182	TC 50 - WE 14 / H 130	50	14	130	44	50	•	811-106005
4132	4183	TC 50 - WE 14 / H 160	50	14	160	44	54	•	811-106005
213-11338	4788	TC 50 - WE 16 / H 63	50	16	63	48	-	•	811-106006
213-11356	5561	TC 50 - WE 16 / H 100	50	16	100	48	54	•	811-106006
5409	5430	TC 50 - WE 16 / H 130	50	16	130	48	54	•	811-106006
213-11368	5050	TC 50 - WE 16 / H 160	50	16	160	48	54	•	811-106006
263-11318	4206	TC 50 - WE 16 / H 200	50	16	200	48	57	•	811-106006
213-11339	4789	TC 50 - WE 18 / H 63	50	18	63	50	-	•	811-106006
213-11357	5562	TC 50 - WE 18 / H 100	50	18	100	50	56	•	811-106006
4137	4213	TC 50 - WE 18 / H 130	50	18	130	50	56	•	811-106006
4138	4215	TC 50 - WE 18 / H 160	50	18	160	50	56	•	811-106006
213-11340	4790	TC 50 - WE 20 / H 63	50	20	63	52	-	•	811-106007
213-11358	5563	TC 50 - WE 20 / H 100	50	20	100	52	59	•	811-106007
5410	5431	TC 50 - WE 20 / H 130	50	20	130	52	59	•	811-106007
213-11369	5052	TC 50 - WE 20 / H 160	50	20	160	52	59	•	811-106007
263-11320	4242	TC 50 - WE 20 / H 200	50	20	200	52	61	•	811-106007
213-11341	4791	TC 50 - WE 25 / H 80	50	25	80	65	-	•	811-106008
213-11359	5051	TC 50 - WE 25 / H 100	50	25	100	65	-	•	811-106008
5414	5432	TC 50 - WE 25 / H 130	50	25	130	65	-	•	811-106008
263-11301	TC50H160WE25ADB	TC 50 - WE 25 / H 160	50	25	160	65	70	•	811-106008
263-11321	4244	TC 50 - WE 25 / H 200	50	25	200	65	72	•	811-106008
213-11342	4792	TC 50 - WE 32 / H 100	50	32	100	72	-	•	811-106009
5415	5433	TC 50 - WE 32 / H 130	50	32	130	72	-	•	811-106009
263-11302	5055	TC 50 - WE 32 / H 160	50	32	160	72	-	•	811-106009
263-11381	4245	TC 50 - WE 32 / H 200	50	32	200	72	-	•	811-106009
213-11343	4793	TC 50 - WE 40 / H 120	50	40	120	80	-	•	811-106009
5027	5056	TC 50 - WE 40 / H 160	50	40	160	80	-	•	811-106009
263-11343	4247	TC 50 - WE 50 / H 120	50	50	120	100	-	•	4978

WELDON END MILL HOLDERS - HIGH SPEED LINE

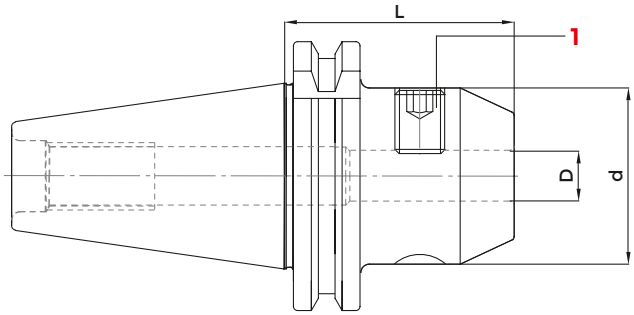

DIN 69871 AD - DIN 1835 B — HIGH SPEED LINE

COD.	DESCRIPTION	ISO	D	d	L	G2.5 25000	1 SCREW
213-91301	TC40H50WE06	40	6	50	25	•	811-106001
213-91302	TC40H50WE08	40	8	50	28	•	811-106002
213-91303	TC40H50WE10	40	10	50	35	•	811-106004
213-91304	TC40H50WE12	40	12	50	42	•	811-106005
213-91306	TC40H63WE16	40	16	63	48	•	811-106006
213-91308	TC40H63WE20	40	20	63	52	•	811-106007
213-91309	TC40H100WE25	40	25	100	65	•	811-106008
213-91310	TC40H100WE32	40	32	100	72	•	811-106009
213-91319	TC50H63WE20	50	20	63	52	•	811-106007
213-91320	TC50H80WE25	50	25	80	65	•	811-106008
213-91321	TC50H100WE32	50	32	100	72	•	811-106009

WELDON END MILL HOLDERS - LONG SERIES - HIGH SPEED LINE

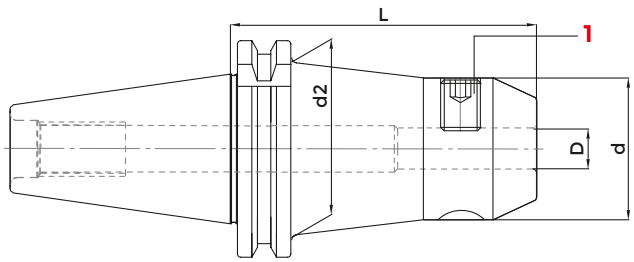

DIN 69871 AD - DIN 1835 B — HIGH SPEED LINE

COD.	DESCRIPTION	ISO	D	L	d	d2	G2.5 25000	1 SCREW
213-91324	TC40H100WE06	40	6	100	25	35	•	811-106001
213-91325	TC40H100WE08	40	8	100	28	38	•	811-106002
213-91326	TC40H100WE10	40	10	100	35	40	•	811-106004
213-91327	TC40H100WE12	40	12	100	42	-	•	811-106005
213-91329	TC40H100WE16	40	16	100	48	-	•	811-106006
213-91331	TC40H100WE20	40	20	100	50	-	•	811-106007

WELDON END MILL HOLDERS - SHORT SERIES WITH COOLANT CHANNELS

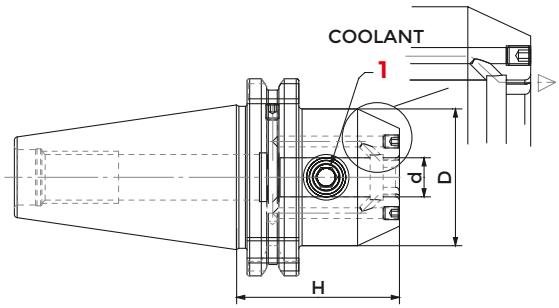

DIN69871 AD - DIN 1835 B

COD.	DESCRIPTION	ISO	D	H	d	G6,3 12000	1 SCREW
213-61325	TC 40 - WEC 6 / H 50	40	25	50	6	•	811-106001
213-61326	TC 40 - WEC 8 / H 50	40	28	50	8	•	811-106002
213-61327	TC 40 - WEC 10 / H 50	40	35	50	10	•	811-106004
213-61328	TC 40 - WEC 12 / H 50	40	42	50	12	•	811-106005
213-61329	TC 40 - WEC 14 / H 50	40	44	50	14	•	811-106005
213-61330	TC 40 - WEC 16 / H 63	40	48	63	16	•	811-106006
213-61331	TC 40 - WEC 18 / H 63	40	50	63	18	•	811-106006
213-61332	TC 40 - WEC 20 / H 63	40	52	63	20	•	811-106007
213-61333	TC 40 - WEC 25 / H 100	40	65	100	25	•	811-106008
213-61334	TC 40 - WEC 32 / H 100	40	72	100	32	•	811-106009
213-61345	TC 40 - WEC 40 / H 115	40	80	115	40	•	811-106009
213-61335	TC 50 - WEC 6 / H 63	50	25	63	6	•	811-106001
213-61336	TC 50 - WEC 8 / H 63	50	28	63	8	•	811-106002
213-61337	TC 50 - WEC 10 / H 63	50	35	63	10	•	811-106004
213-61338	TC 50 - WEC 12 / H 63	50	42	63	12	•	811-106005
213-61339	TC 50 - WEC 14 / H 63	50	44	63	14	•	811-106005
213-61340	TC 50 - WEC 16 / H 63	50	48	63	16	•	811-106006
213-61341	TC 50 - WEC 18 / H 63	50	50	63	18	•	811-106006
213-61342	TC 50 - WEC 20 / H 63	50	52	63	20	•	811-106007
213-61343	TC 50 - WEC 25 / H 80	50	65	80	25	•	811-106008
213-61344	TC 50 - WEC 32 / H 100	50	72	100	32	•	811-106009
263-61345	TC 50 - WEC 40 / H 120	50	80	120	40	•	811-106009

WHISTLE NOTCH END MILL HOLDERS

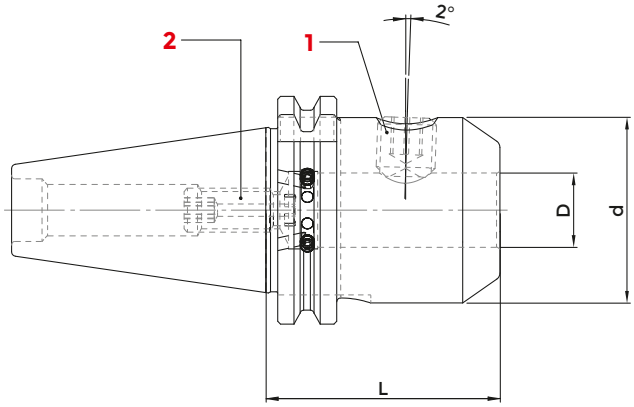

DIN69871 AD/B

COD.	DESCRIPTION	ISO	D	L	d	G6.3 12000	1 SCREW	2 LOCKING SCREW
4795	TC 40 - WN 6 / H 50	40	6	50	25	•	811-106001	811-303043
4796	TC 40 - WN 8 / H 50	40	8	50	28	•	811-106002	811-303081
4797	TC 40 - WN 10 / H 50	40	10	50	35	•	811-106004	811-303082
4798	TC 40 - WN 12 / H 50	40	12	50	42	•	811-106005	811-303083
4799	TC 40 - WN 14 / H 50	40	14	50	44	•	811-106005	811-303083
213-31322	TC 40 - WN 16 / H 63	40	16	63	48	•	811-106006	811-303084
213-31323	TC 40 - WN 18 / H 63	40	18	63	50	•	811-106006	811-303084
213-31324	TC 40 - WN 20 / H 63	40	20	63	52	•	811-106007	811-303084
213-31325	TC 40 - WN 25 / H 100	40	25	100	65	•	811-106008	0212
213-31326	TC 40 - WN 32 / H 100	40	32	100	72	•	811-106009	0212
213-31327	TC 40 - WN 40 / H 115	40	40	115	80	•	811-106009	0212
4815	TC 50 - WN 6 / H 63	50	6	63	25	•	811-106001	811-303043
4816	TC 50 - WN 8 / H 63	50	8	63	28	•	811-106002	811-303081
4817	TC 50 - WN 10 / H 63	50	10	63	35	•	811-106004	811-303082
4818	TC 50 - WN 12 / H 63	50	12	63	42	•	811-106005	811-303083
4819	TC 50 - WN 14 / H 63	50	14	63	44	•	811-106005	811-303083
213-31333	TC 50 - WN 16 / H 63	50	16	63	48	•	811-106006	811-303084
213-31334	TC 50 - WN 18 / H 63	50	18	63	50	•	811-106006	811-303084
213-31335	TC 50 - WN 20 / H 63	50	20	63	52	•	811-106007	811-303084
213-31336	TC 50 - WN 25 / H 80	50	25	80	65	•	811-106008	0247
213-31337	TC 50 - WN 32 / H 100	50	32	100	72	•	811-106009	0247
213-31338	TC 50 - WN 40 / H 120	50	40	120	80	•	811-106009	0247

INDEXABLE DRILL HOLDERS

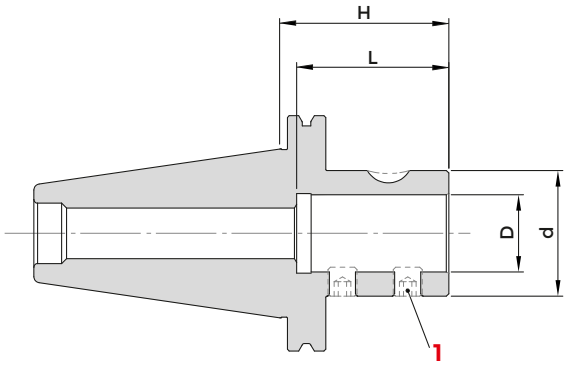

DIN69871 AD

COD.	DESCRIPTION	ISO	D	d	H	L	G6,3 12000	1 SCREW
217-90980	TC 40 - D. 16 P	40	16	36	65	54	•	811-402003
217-90981	TC 40 - D. 20 P	40	20	40	65	54	•	811-402003
217-90982	TC 40 - D. 25 P	40	25	45	70	59	•	811-402005
217-90983	TC 40 - D. 32 P	40	32	52	70	63	•	811-402005
217-90950	TC 50 - D. 16 P	50	16	36	70	54	•	811-402003
217-90984	TC 50 - D. 20 P	50	20	40	70	54	•	811-402003
217-90985	TC 50 - D. 25 P	50	25	45	70	59	•	811-402005
217-90986	TC 50 - D. 32 P	50	32	52	70	63	•	811-402005
217-90987	TC 50 - D. 40 P	50	40	60	80	73	•	811-402007

FACE MILL HOLDERS - TENONS DRIVE

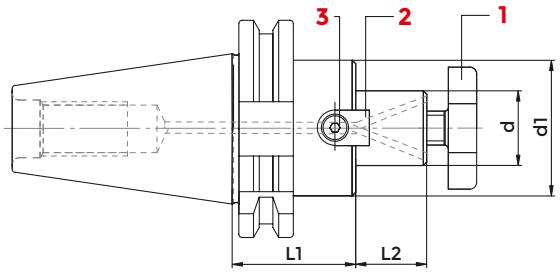

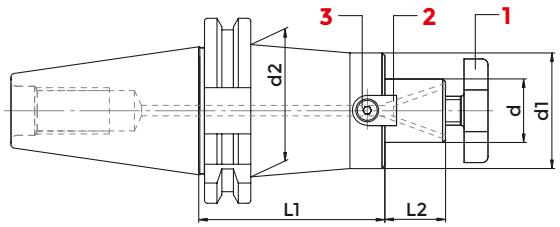

DIN69871 AD/B - ISO 3937

COD. (AD)	COD. (AD+B)	DESCRIPTION	ISO	d	L1	L2	d1	d2	G6, 3 8000	1 CROSS SCREW	2 TENON	3 SCREW	WRENCH
216-71201	-	TC 30 - D. 16 FISSO / H 35	30	16	35	17	38	-	•	811-107003	814-202280	811-101004	816-130002
216-71202	-	TC 30 - D. 22 FISSO / H 50	30	22	50	19	48	-	•	811-107004	814-202250	811-101011	816-130003
216-71203	-	TC 30 - D. 27 FISSO / H 50	30	27	50	21	58	-	•	811-107005	814-202270	811-101018	816-130004
4143	-	TC 30 - D. 32 FISSO / H 55	30	32	55	24	58	-	•	811-107006	814-202290	0207	816-130005
216-71204	216-71301	TC 40 - D. 16 FISSO / H 45	40	16	45	17	38	-	•	811-107003	814-202280	811-101004	816-130002
216-71255	216-71321	TC 40 - D. 16 FISSO / H 100	40	16	100	17	38	-	•	811-107003	814-202280	811-101004	816-130002
266-71210	216-71372	TC 40 - D. 16 FISSO / H 130	40	16	130	17	38	-	•	811-107003	814-202280	811-101004	816-130002
216-71256	216-71381	TC 40 - D. 16 FISSO / H 160	40	16	160	17	38	-	•	811-107003	814-202280	811-101004	816-130002
-	216-71388	TC 40 - D. 16 FISSO / H 200	40	16	200	17	38	-	•	811-107003	814-202280	811-101004	816-130002
216-71205	216-71302	TC 40 - D. 22 FISSO / H 45	40	22	45	19	48	-	•	811-107004	814-202250	811-101011	816-130003
216-71259	216-71322	TC 40 - D. 22 FISSO / H 100	40	22	100	19	48	-	•	811-107004	814-202250	811-101011	816-130003
266-71211	216-71373	TC 40 - D. 22 FISSO / H 130	40	22	130	19	46	-	•	811-107004	814-202250	811-101011	816-130003
216-71260	216-71382	TC 40 - D. 22 FISSO / H 160	40	22	160	19	46	48	•	811-107004	814-202250	811-101011	816-130003
-	216-71389	TC 40 - D. 22 FISSO / H 200	40	22	200	19	46	48	•	811-107004	814-202250	811-101011	816-130003
216-71206	216-71303	TC 40 - D. 27 FISSO / H 50	40	27	50	21	58	-	•	811-107005	814-202270	811-101018	816-130004
266-71273	216-71323	TC 40 - D. 27 FISSO / H 100	40	27	100	21	48	-	•	811-107005	814-202270	811-101018	816-130004
266-71213	216-71374	TC 40 - D. 27 FISSO / H 130	40	27	130	21	48	-	•	811-107005	814-202270	811-101018	816-130004
5541	216-71396	TC 40 - D. 27 FISSO / H 160	40	27	160	21	58	-	•	811-107005	814-202270	811-101018	816-130004
-	216-71399	TC 40 - D. 27 FISSO / H 200	40	27	200	21	58	-	•	811-107005	814-202270	811-101018	816-130004
216-71207	216-71304	T C 40 - D. 32 FISSO / H 55	40	32	55	24	78	-	•	811-107006	814-202290	0207	816-130005
266-71274	216-71324	TC 40 - D. 32 FISSO / H 100	40	32	100	24	58	-	•	811-107006	814-202290	0207	816-130005
8368	216-71397	TC 40 - D. 32 FISSO / H 160	40	32	160	24	78	-	•	811-107006	814-202290	0207	816-130005
216-71208	216-71305	TC 40 - D. 40 FISSO / H 55	40	40	55	27	88	-	•	811-107007	814-202710	811-101029	816-130006
266-71275	8392	TC 40 - D. 40 FISSO / H 100	40	40	100	27	70	-	•	811-107007	814-202710	811-101029	816-130006
8369	216-71398	TC 40 - D. 40 FISSO / H 160	40	40	160	27	80	-	•	811-107007	814-202710	811-101029	816-130006
216-71214	216-71306	TC 50 - D. 16 FISSO / H 45	50	16	45	17	38	-	•	811-107003	814-202280	811-101004	816-130002
266-71233	216-71312	TC 50 - D. 16 FISSO / H 100	50	16	100	17	38	-	•	811-107003	814-202280	811-101004	816-130002
9405	216-71376	TC 50 - D. 16 FISSO / H 130	50	16	130	17	38	-	•	811-107003	814-202280	811-101004	816-130002
266-71234	216-71383	TC 50 - D. 16 FISSO / H 160	50	16	160	17	38	-	•	811-107003	814-202280	811-101004	816-130002
-	216-71390	TC 50 - D. 16 FISSO / H 200	50	16	200	17	38	-	•	811-107003	814-202280	811-101004	816-130002

follows >>

FACE MILL HOLDERS - TENONS DRIVE

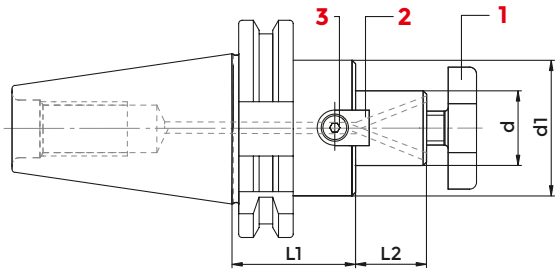

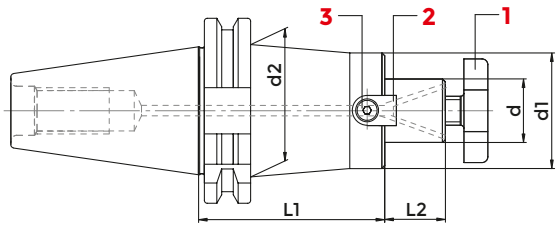

DIN69871 AD/B - ISO 3937

COD. (AD)	COD. (AD+B)	DESCRIPTION	ISO	d	L1	L2	d1	d2	G6, 3 8000	1 CROSS SCREW	2 TENON	3 SCREW	WRENCH
216-71215	216-71307	TC 50 - D. 22 FISSO / H 45	50	22	45	19	48	-	•	811-107004	814-202250	811-101011	816-130003
216-71267	216-71313	TC 50 - D. 22 FISSO / H 100	50	22	100	19	46	48	•	811-107004	814-202250	811-101011	816-130003
216-71272	-	TC 50 - D. 22 FISSO / H 100 FIS.63	50	22	100	19	50	60	•	811-107004	814-202250	811-101011	816-130003
9406	216-71377	TC 50 - D. 22 FISSO / H 130	50	22	130	19	46	60	•	811-107004	814-202250	811-101011	816-130003
5545	216-71384	TC 50 - D. 22 FISSO / H 160	50	22	160	19	46	48	•	811-107004	814-202250	811-101011	816-130003
216-71273	-	TC 50 - D. 22 FISSO / H 160 FIS.63	50	22	160	19	50	60	•	811-107004	814-202250	811-101011	816-130003
-	216-71391	TC 50 - D. 22 FISSO / H 200	50	22	200	19	46	48	•	811-107004	814-202250	811-101011	816-130003
-	8398	TC 50 - D. 22 FISSO / H 250	50	22	250	19	48	60	•	811-107004	814-202250	811-101011	816-130003
-	8399	TC 50 - D. 22 FISSO / H 300	50	22	300	19	48	60	•	811-107004	814-202250	811-101011	816-130003
216-71216	216-71308	TC 50 - D. 27 FISSO / H 45	50	27	45	21	58	-	•	811-107005	814-202270	811-101018	816-130004
216-71277	216-71314	TC 50 - D. 27 FISSO / H 100	50	27	100	21	55	78	•	811-107005	814-202270	811-101018	816-130004
9407	216-71378	TC 50 - D. 27 FISSO / H 130	50	27	130	21	55	78	•	811-107005	814-202270	811-101018	816-130004
216-71278	216-71385	TC 50 - D. 27 FISSO / H 160	50	27	160	21	55	78	•	811-107005	814-202270	811-101018	816-130004
-	216-71392	TC 50 - D. 27 FISSO / H 200	50	27	200	21	55	78	•	811-107005	814-202270	811-101018	816-130004
-	8402	TC 50 - D. 27 FISSO / H 250	50	27	250	21	55	78	•	811-107005	814-202270	811-101018	816-130004
-	8403	TC 50 - D. 27 FISSO / H 300	50	27	300	21	55	78	•	811-107005	814-202270	811-101018	816-130004
216-71217	216-71309	TC 50 - D. 32 FISSO / H 55	50	32	55	24	78	-	•	811-107006	814-202290	0207	816-130005
266-71256	216-71315	TC 50 - D. 32 FISSO / H 100	50	32	100	24	66	78	•	811-107006	814-202290	0207	816-130005
266-71286	216-71379	TC 50 - D. 32 FISSO / H 130	50	32	130	24	66	78	•	811-107006	814-202290	0207	816-130005
266-71257	216-71386	TC 50 - D. 32 FISSO / H 160	50	32	160	24	66	78	•	811-107006	814-202290	0207	816-130005
-	216-71393	TC 50 - D. 32 FISSO / H 200	50	32	200	24	66	78	•	811-107006	814-202290	0207	816-130005
-	8406	TC 50 - D. 32 FISSO / H 250	50	32	250	24	66	78	•	811-107006	814-202290	0207	816-130005
-	8407	TC 50 - D. 32 FISSO / H 300	50	32	300	24	66	-	•	811-107006	814-202290	0207	816-130005
216-71218	216-71310	TC 50 - D. 40 FISSO / H 55	50	40	55	27	88	-	•	811-107007	814-202710	811-101029	816-130006
266-71276	216-71316	TC 50 - D. 40 FISSO / H 100	50	40	100	27	70	-	•	811-107007	814-202710	811-101029	816-130006
216-71380	-	TC 50 - D. 40 FISSO / H 130 FIS. 63	50	40	130	27	70	78	•	811-107007	814-202710	811-101029	816-130006
266-71287	216-71387	TC 50 - D. 40 FISSO / H 160	50	40	160	27	70	78	•	811-107007	814-202710	811-101029	816-130006
-	216-71394	TC 50 - D. 40 FISSO / H 200	50	40	200	27	70	78	•	811-107007	814-202710	811-101029	816-130006

ACCESSORIES

p. 693

p. 695

p. 694

COMBI-SHELL MILL HOLDERS

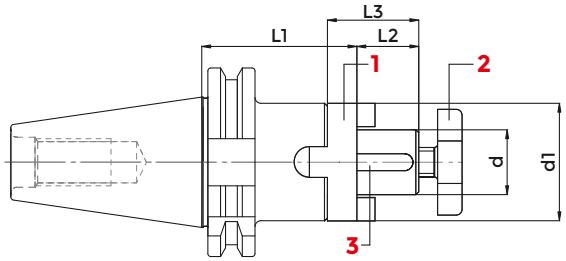

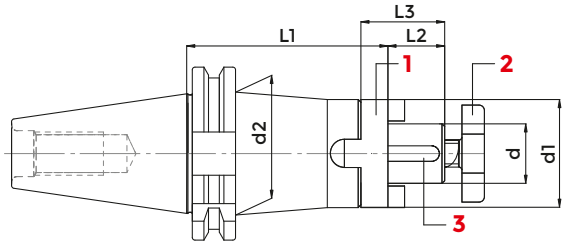

DIN69871 A

COD.	DESCRIPTION	ISO	d	L1	L2	L3	d1	d2	G6, 3 8000	1 COUPLING RING	2 CROSS SCREW	3 KEY	WRENCH
216-11232	TC 30 - D.16 C/ H 50	30	16	50	17	27	32	-	•	814-30001	811-107003	814-201010	816-130002
216-11234	TC 30 - D.22 C/ H 50	30	22	50	19	31	40	-	•	814-30002	811-107004	814-201020	816-130003
216-11201	TC 40 - D.16 C/ H 55	40	16	55	17	27	32	-	•	814-30001	811-107003	814-201010	816-130002
216-11213	TC 40 - D.16 C/ H 100	40	16	100	17	27	32	44	•	814-30001	811-107003	0015	816-130002
8474	TC 40 - D.16 C/ H 160	40	16	160	17	27	32	44	•	814-30001	811-107003	0015	816-130002
216-11202	TC 40 - D.22 C/ H 55	40	22	55	19	31	40	-	•	814-30002	811-107004	814-201020	816-130003
216-11214	TC 40 - D.22 C/ H 100	40	22	100	19	31	40	-	•	814-30002	811-107004	814-201020	816-130003
8475	TC 40 - D.22 C/ H 160	40	22	160	19	31	40	-	•	814-30002	811-107004	814-201020	816-130003
216-11203	TC 40 - D.27 C/ H 55	40	27	55	21	33	48	-	•	814-30003	811-107005	814-201030	816-130004
216-11215	TC 40 - D.27 C/ H 100	40	27	100	21	33	48	-	•	814-30003	811-107005	814-201030	816-130004
8476	TC 40 - D.27 C/ H 160	40	27	160	21	33	48	-	•	814-30003	811-107005	814-201030	816-130004
216-11204	TC 40 - D.32 C/ H 60	40	32	60	24	32	58	-	•	814-30004	811-107006	814-201040	816-130005
216-11216	TC 40 - D.32 C/ H 100	40	32	100	24	32	58	-	•	814-30004	811-107006	814-201040	816-130005
8477	TC 40 - D.32 C/ H 160	40	32	160	24	32	58	-	•	814-30004	811-107006	814-201040	816-130005
216-11205	TC 40 - D.40 C/ H 60	40	40	60	27	40	70	-	•	814-30005	811-107007	814-201050	816-130006
216-11217	TC 40 - D.40 C/ H 100	40	40	100	27	40	70	-	•	814-30005	811-107007	814-201050	816-130006
3836	TC 45 - D.16 C/ H 60	45	16	60	17	16	32	-	•	814-30001	811-107003	814-201010	816-130002
3837	TC 45 - D.22 C/ H 65	45	22	65	19	11	40	-	•	814-30002	811-107004	814-201020	816-130003
4105	TC 45 - D.22 C/ H 100	45	22	100	19	22	40	-	•	814-30002	811-107004	814-201020	816-130003
3838	TC 45 - D.27 C/ H 65	45	27	65	21	27	48	-	•	814-30003	811-107005	814-201030	816-130004
4106	TC 45 - D.27 C/ H 100	45	27	100	21	27	48	-	•	814-30003	811-107005	814-201030	816-130004
3839	TC 45 - D.32 C/ H 65	45	32	65	24	32	58	-	•	814-30004	811-107006	814-201040	816-130005
3840	TC 45 - D.40 C/ H 70	45	40	70	27	40	70	-	•	814-30005	811-107007	814-201050	816-130006
216-11206	TC 50 - D.16 C/ H 55	50	16	55	17	16	32	-	•	814-30001	811-107003	814-201010	816-130002
216-11218	TC 50 - D.16 C/ H 100	50	16	100	17	16	32	50	•	814-30001	811-107003	814-201010	816-130002
216-11207	TC 50 - D.22 C/ H 55	50	22	55	19	22	40	-	•	814-30002	811-107004	814-201020	816-130003
216-11219	TC 50 - D.22 C/ H 100	50	22	100	19	22	40	60	•	814-30002	811-107004	814-201020	816-130003
216-11208	TC 50 - D.27 C/ H 55	50	27	55	21	27	48	-	•	814-30003	811-107005	814-201030	816-130004
216-11220	TC 50 - D.27 C/ H 100	50	27	100	21	27	48	60	•	814-30003	811-107005	814-201030	816-130004
216-11209	TC 50 - D.32 C/ H 55	50	32	55	24	32	58	-	•	814-30004	811-107006	814-201040	816-130005
216-11221	TC 50 - D.32 C/ H 100	50	32	100	24	32	58	-	•	814-30004	811-107006	814-201040	816-130005
216-11210	TC 50 - D.40 C/ H 55	50	40	55	27	40	70	-	•	814-30005	811-107007	814-201050	816-130006
216-11222	TC 50 - D.40 C/ H 100	50	40	100	27	40	70	-	•	814-30005	811-107007	814-201050	816-130006
4522	TC 50 - D.50 C/ H 70	50	50	70	30	50	90	-	•	4095	811-107009	0137	816-130007

MILL HOLDERS WITH FEATHER KEY

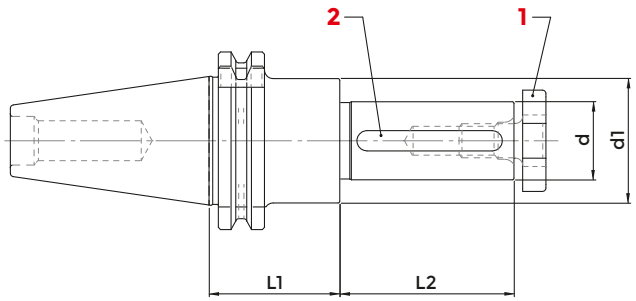

DIN69871 A

COD.	DESCRIPTION	ISO	d	L1	L2	d1	G6, 3 8000	1 CROSS SCREW	2 KEY	3 WRENCH
8493	TC 40 - D. 16 CHT	40	16	45	30	28	•	811-107003	0147	816-130002
8494	TC 40 - D. 22 CHT	40	22	45	40	36	•	811-107004	0148	816-130003
8495	TC 40 - D. 27 CHT	40	27	45	60	43	•	811-107005	0149	816-130004
8496	TC 40 - D. 32 CHT	40	32	45	60	48	•	811-107006	0150	816-130005
8497	TC 40 - D. 40 CHT	40	40	45	60	56	•	811-107007	0151	816-130006

ACCESSORIES

p. 693

p. 694

FACE MILL HOLDER FOR FACE MILLING CUTTERS

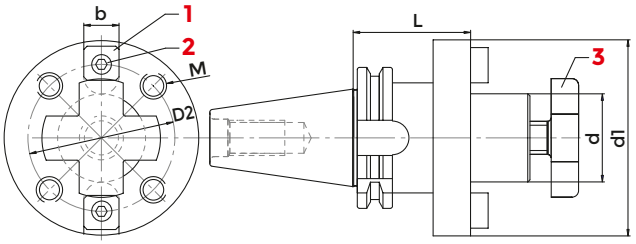

DIN69871 A - DIN 6357

COD.	DESCRIPTION	ISO	d	L	d1	D2	M	b	G6, 3 8000	1 SCREW	2 TENON	3 CROSS SCREW
216-21201	TC 40 - D. 40 FM	40	40	60	89	66,7	M 12	15,9	•	0207	814-202080	811-107007
216-21202	TC 50 - D. 40 FM	50	40	70	89	66,7	M 12	15,9	•	0207	814-202080	811-107007
216-21203	TC 50 - D. 60 FM	50	60	70	129	101,6	M 16	25,4	•	811-101064	814-202120	-

ACCESSORIES

p. 695

p. 693

END MILL HOLDERS FOR MILLING CUTTERS WITH THREADED SHANKS

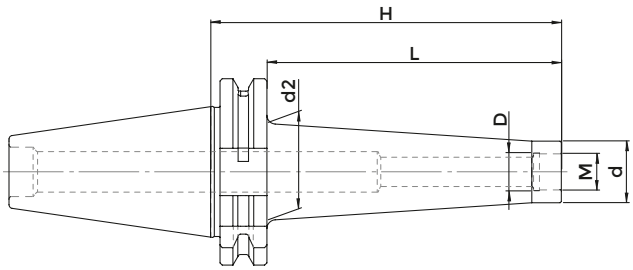

DIN69871 AD - DIN 6358

COD.	DESCRIPTION	ISO	M	D	d	d2	H	L	G6,3 12000
217-81320	TC 40 - M 8 / H 55	40	M 8	8,5	13	15	55	36	•
217-81301	TC 40 - M 8 / H 69	40	M 8	8,5	13	23	69	50	•
217-81302	TC 40 - M 8 / H 94	40	M 8	8,5	13	23	94	75	•
7803	TC 40 - M 8/ H 119	40	M 8	8,5	13	25	119	100	•
217-81321	TC 40 - M 10 / H 55	40	M 10	10,5	18	20	55	36	•
217-81304	TC 40 - M 10 / H 69	40	M 10	10,5	18	23	69	50	•
217-81305	TC 40 - M 10 / H 94	40	M 10	10,5	18	28	94	75	•
217-81306	TC 40 - M 10 / H 119	40	M 10	10,5	18	32	119	100	•
217-81322	TC 40 - M 10 / H 145	40	M 10	10,5	18	34	145	126	•
217-81323	TC 40 - M 12 / H 55	40	M 12	12,5	21	24	55	36	•
217-81307	TC 40 - M 12 / H 69	40	M 12	12,5	21	24	69	50	•
217-81308	TC 40 - M 12 / H 94	40	M 12	12,5	21	31	94	75	•
217-81309	TC 40 - M 12 / H 119	40	M 12	12,5	21	33	119	100	•
217-81324	TC 40 - M 12 / H 145	40	M 12	12,5	21	38	145	126	•
7814	TC 40 - M 12 / H 175	40	M 12	12,5	21	42	175	156	•
217-81326	TC 40 - M 16 / H 55	40	M 16	17	29	32	55	36	•
217-81310	TC 40 - M 16 / H 69	40	M 16	17	29	34	69	50	•
217-81311	TC 40 - M 16 / H 94	40	M 16	17	29	34	94	75	•
217-81312	TC 40 - M 16 / H 119	40	M 16	17	29	36	119	100	•
217-81313	TC 40 - M 16 / H 145	40	M 16	17	29	40	145	126	•
217-81327	TC 40 - M 16 / H 175	40	M 16	17	29	39	175	156	•
7999	TC 40 - M 16 / H 195	40	M 16	17	29	44	195	176	•
8713	TC 50 - M 10 / H 69	50	M 16	10,5	18	19,5	69	50	•
8714	TC 50 - M 10 / H 119	50	M 16	10,5	18	28	119	100	•
8715	TC 50 - M 10 / H 169	50	M 16	10,5	18	32	169	150	•
217-81314	TC 50 - M 12 / H 69	50	M 12	12,5	21	24	69	50	•
217-81315	TC 50 - M 12 / H 119	50	M 12	12,5	21	33	119	100	•
7823	TC 50 - M 12 / H 169	50	M 12	12,5	21	40	169	150	•
8716	TC 50 - M 12 / H 235	50	M 12	12,5	21	42	235	216	•
217-81317	TC 50 - M 16 / H 69	50	M 16	17	29	34	69	50	•
217-81318	TC 50 - M 16 / H 119	50	M 16	17	29	36	119	100	•
217-81319	TC 50 - M 16 / H 169	50	M 16	17	29	42,5	169	150	•
8717	TC 50 - M 16 / H 235	50	M 16	17	29	44	235	216	•

INDEXABLE MORSE TAPER DRILL HOLDERS

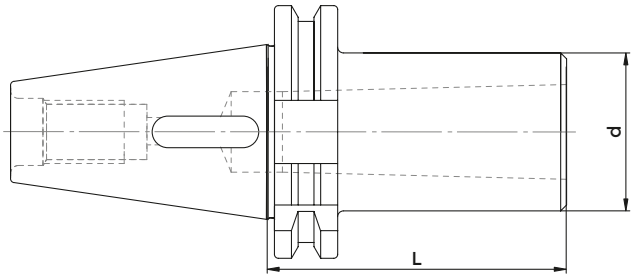

DIN69871 AD

COD.	DESCRIPTION	ISO	CM	d	L
212-41214	TC 30 - CM 1 PUNTE	30	1	25	55
212-41215	TC 30 - CM 2 PUNTE	30	2	32	60
212-41216	TC 30 - CM 3 PUNTE	30	3	40	90
212-41201	TC 40 - CM 1 PUNTE	40	1	25	50
212-41202	TC 40 - CM 2 PUNTE	40	2	32	60
212-41203	TC 40 - CM 3 PUNTE	40	3	40	75
212-41204	TC 40 - CM 4 PUNTE	40	4	48	95
212-41205	TC 50 - CM 1 PUNTE	50	1	25	45
212-41206	TC 50 - CM 2 PUNTE	50	2	32	60
212-41207	TC 50 - CM 3 PUNTE	50	3	40	65
212-41208	TC 50 - CM 4 PUNTE	50	4	48	95
212-41209	TC 50 - CM 5 PUNTE	50	5	63	105

END MILL HOLDERS FOR MORSE TAPER CUTTERS

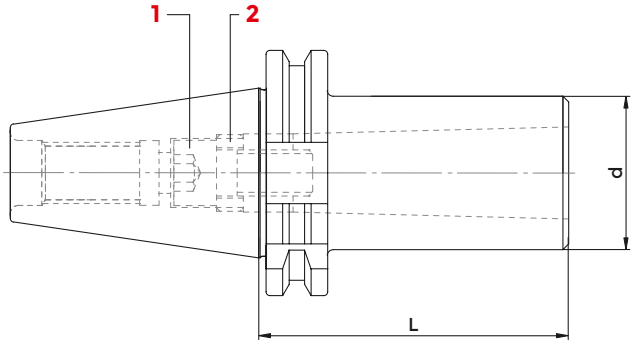

DIN69871 A - DIN 6357

						1	2	3
COD.	DESCRIPTION	ISO	MORSE	d	L	SCREW	LEFT NUT	WRENCH
3893	TC 30- CM 3 FRESE	30	3	40	80	7402	811-302032	816-20206002
5100	TC 40- CM 1 FRESE	40	1	25	50	811-101029	811-302030	816-20204002
212-21202	TC 40- CM 2 FRESE	40	2	32	50	811-111007	811-302031	816-20205002
212-21203	TC 40- CM 3 FRESE	40	3	40	70	7403	811-302032	816-20206002
212-21204	TC 40- CM 4 FRESE	40	4	48	95	7404	811-302036	816-20207002
3896	TC 45- CM 4 FRESE	45	4	48	110	7407	811-302036	816-20207002
5101	TC 50- CM 1 FRESE	50	1	25	45	811-101029	811-302030	816-20204002
212-21206	TC 50- CM 2 FRESE	50	2	32	50	811-111007	811-302031	816-20205002
212-21207	TC 50- CM 3 FRESE	50	3	40	65	7403	811-302032	816-20206002
212-21208	TC 50- CM 4 FRESE	50	4	48	95	7407	811-302036	816-20207002
212-21209	TC 50- CM 5 FRESE	50	5	63	120	7408	811-302034	816-20208002

COMBI MORSE TAPER HOLDERS FOR DRILLS AND MILLING CUTTERS

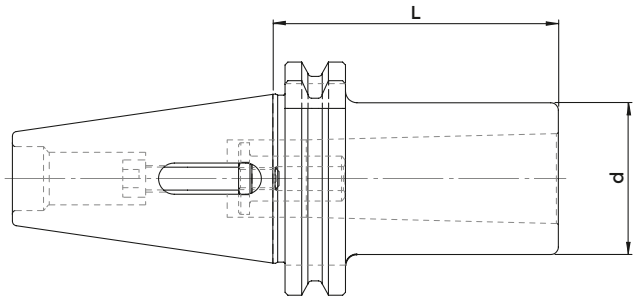

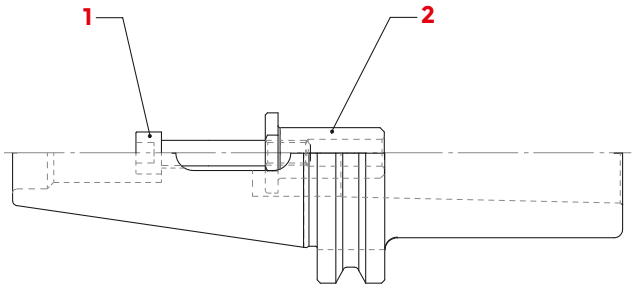

DIN69871 AD - DIN 228-2 FORM C/D

						1	2
COD.	DESCRIPTION	ISO	MORSE	d	L	SCREW	REDUCER
212-61201	TC 40 - CM 1 P+ F	40	1	25	50	7400	-
212-61202	TC 40 - CM 2 P+ F	40	2	32	60	7401	-
212-61203	TC 40 - CM 3 P+ F	40	3	40	75	7400	811-302006
3637	TC 45 - CM 1 P+ F	45	1	25	50	7400	-
3638	TC 45 - CM 2 P+ F	45	2	32	60	7405	-
3639	TC 45 - CM 3 P+ F	45	3	40	80	7455	-
3641	TC 45 - CM 4 P+ F	45	4	48	100	0056	0129
212-61205	TC 50 - CM 1 P+ F	50	1	25	45	7400	-
212-61206	TC 50 - CM 2 P+ F	50	2	32	60	7405	-
212-61207	TC 50 - CM 3 P+ F	50	3	40	65	811-101070	-
212-61208	TC 50 - CM 4 P+ F	50	4	48	95	811-101070	811-302008

COMBI MORSE TAPER HOLDERS FOR DRILLS AND MILLING CUTTERS - LONG SERIES

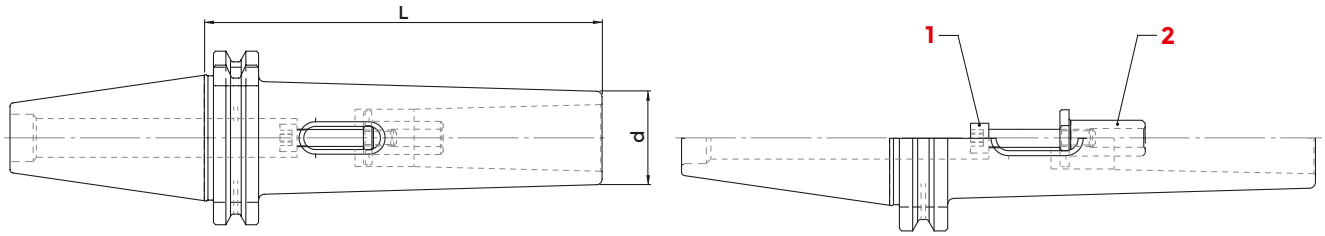

DIN69871 AD - DIN 228-2 FORM C/D

COD. DRILLS	COD. DRILLS + MILLING CUTTERS	DESCRIPTION	ISO	MORSE	d	L	1 SCREW	2 REDUCER
3778	212-61210	TC 40 - CM 1	40	1	18	120	7400	-
3779	212-61211	TC 40 - CM 2	40	2	25	120	7401	-
3780	212-61212	TC 40 - CM 3	40	3	33	140	7400	811-302006
4241	-	TC 40 - CM 4	40	4	48	165	-	-
3745	212-61214	TC 50 - CM 1	50	1	18	120	7400	-
3746	212-61215	TC 50 - CM 2	50	2	25	140	7405	-
3747	212-61216	TC 50 - CM 3	50	3	33	150	811-101070	-
3748	212-61217	TC 50 - CM 4	50	4	40	180	7409	-
3749	-	TC 50 - CM 5	50	5	55	220	-	-

ADAPTER FROM DIN69871(SK) TO MAS403BT/SK/DIN2080

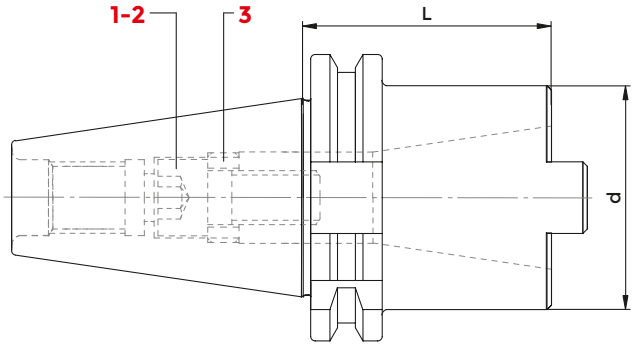

DIN69871 A

COD.	DESCRIPTION	ISO	ISO	d	L	G6.3 8000	1 SCREW DIN 2080	2 SCREW BT DIN 69871	3 NUT	WRENCH
4203	TC 40 - ISO 30 / TC 30 / BT 30	40	30	50	60	•	811-101065	0177	811-302032	816-20206002
212-11213	TC 40 - ISO 40 / TC 40 / BT 40	40	40	68	100	•	811-401147	811-401150	811-302036	816-20207002
212-11201	TC 50 - ISO 40 / TC 40 / BT 40	50	40	68	70	•	811-401147	811-401150	811-302036	816-20207002
212-11214	TC 50 - ISO 50 / TC 50 / BT 50	50	50	100	120	•	811-401151	811-401152	811-302047	816-202090

* included in delivery

ADAPTER FROM DIN69871(SK) TO DIN69893-1 (HSK A+C)

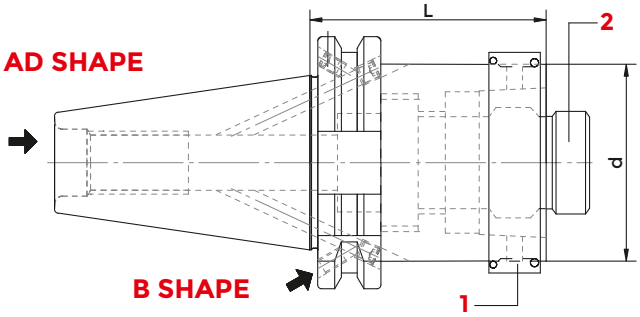

DIN69871 AD/B

COD.	DESCRIPTION	ISO	d	L	G6.3 8000	1 LOCKING RING	2 CLAMPING UNIT
212-91301	TC 40 - HSK 50 A+C	40	50	60	•	L0701450	HN50C
212-91302	TC 40 - HSK 63 A+C	40	63	80	•	L0701460	HN63C
212-91304	TC 50 - HSK 63 A+C	50	63	60	•	L0701460	HN63C

ADAPTER FROM DIN69871(SK) TO ISO26623-1 (POLYGONAL)

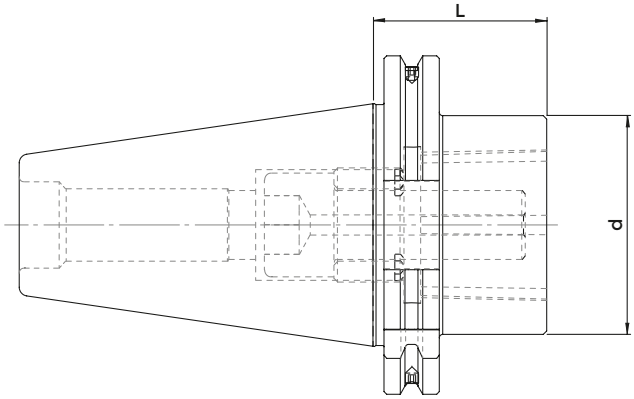

DIN69871 AD/B

COD.	DESCRIPTION	ISO	d	L	G6.3 8000
TC40H30C40ADB	TC 40 - C 40 / H 30	40	40	30	•
TC40H60C40ADB	TC 40 - C 40 / H 60	40	40	60	•
TC40H40C50ADB	TC 40 - C 50 / H 40	40	50	40	•
TC40H85C63ADB	TC 40 - C 63 / H 85	40	63	85	•
TC50H30C40ADB	TC 50 - C 40/ H 30	50	40	30	•
TC50H60C40ADB	TC 50 - C 40/ H 60	50	40	60	•
TC50H30C50ADB	TC 50 - C 50 / H 30	50	50	30	•
TC50H70C50ADB	TC 50 - C 50 / H 70	50	50	70	•
TC50H110C50ADB	TC 50 - C 50 / H 110	50	50	110	•
TC50H30C63ADB	TC 50 - C 63 / H 30	50	63	30	•
TC50H50C63ADB	TC 50 - C 63 / H 50	50	63	50	•
TC50H80C63ADB	TC 50 - C 63 / H 80	50	63	80	•
TC50H70C80ADB	TC 50 - C 80 / H 70	50	80	70	•
TC50H120C80ADB	TC 50 - C 80 / H 120	50	80	120	•

ER COLLET CHUCK WITH MINI NUT

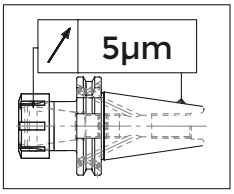

H= 0 > 100 mm - 5 µm
H= 100 > 200 mm - 10 µm

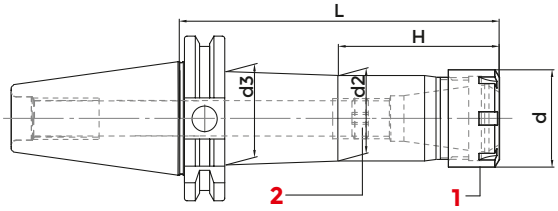

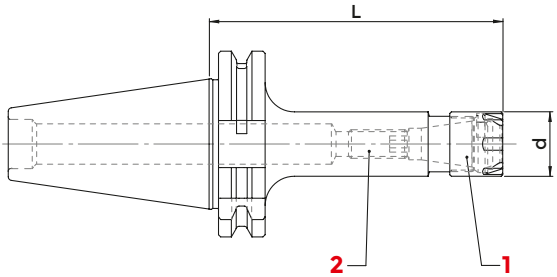

DIN 69871 AD - DIN6499/ISO15488 - DIN 69871 AD/B

COD. (AD)	COD. (AD+B)	DESCRIPTION	ISO	ER	d	d2	d3	H	L	G6.3 12000	G6.3 15000	1 NUT	2 SCREW	WRENCH	COLLET
214-91333	4720	TC 40 - ER 11 GM / H 70 SLIM LINE	40	ER 11 1÷ 8	16	14	20	22	70	-	•	812-203012	811-102114	816-203008	ER11
214-91334	4721	TC 40 - ER 11 GM / H100 SLIM LINE	40	ER 11 1÷ 8	16	14	20	40	100	-	•	812-203012	811-102114	816-203008	ER11
4057	4722	TC 40 - ER 11 GM / H130 SLIM LINE	40	ER 11 1÷ 8	16	16	-	-	130	-	•	812-203012	811-102114	816-203008	ER11
214-91335	4723	TC 40 - ER 11 GM / H160 SLIM LINE	40	ER 11 1÷ 8	16	14	27	50	160	-	•	812-203012	811-102114	816-203008	ER11
214-91336	4724	TC 40 - ER 16 GM / H 70 SLIM LINE	40	ER 16 1÷12	22	20	25	27	70	-	•	812-203013	811-102038	816-203009	ER16
214-91337	4748	TC 40 - ER 16 GM / H100 SLIM LINE	40	ER 16 1÷12	22	20	26	47	100	-	•	812-203013	811-102038	816-203009	ER16
264-31248	4749	TC 40 - ER 16 GM / H130 SLIM LINE	40	ER 16 1÷12	22	22	-	-	130	-	•	812-203013	811-102038	816-203009	ER16
214-91338	4021	TC 40 - ER 16 GM / H160 SLIM LINE	40	ER 16 1÷12	22	20	26	97	160	-	•	812-203013	811-102038	816-203009	ER16
3418	4026	TC 40 - ER 16 GM / H200 SLIM LINE	40	ER 16 1÷12	22	22	-	-	200	-	•	812-203013	811-102038	816-203009	ER16
214-91348	4000	TC 40 - ER 20 GM / H 70 SLIM LINE	40	ER 20 1÷15	28	28	-	-	70	-	•	812-203014	811-106005	816-203010	ER20
214-91349	4022	TC 40 - ER 20 GM / H100 SLIM LINE	40	ER 20 1÷15	28	26	30	48	100	-	•	812-203014	811-106005	816-203010	ER20
3434	4750	TC 40 - ER 20 GM / H130 SLIM LINE	40	ER 20 1÷15	28	28	-	-	130	-	•	812-203014	811-106005	816-203010	ER20
214-91350	4691	TC 40 - ER 20 GM / H160 SLIM LINE	40	ER 20 1÷15	28	26	31	98	160	-	•	812-203014	811-106005	816-203010	ER20
4017	4729	TC 40 - ER 20 GM / H200 SLIM LINE	40	ER 20 1÷15	28	28	-	-	200	-	•	812-203014	811-106005	816-203010	ER20
214-91339	4001	TC 40 - ER 25 GM / H 70 SLIM LINE	40	ER 25 1÷20	35	35	-	-	70	-	•	812-203015	0190	816-203011	ER25
214-91340	4751	TC 40 - ER 25 GM / H100 SLIM LINE	40	ER 25 1÷20	35	35	-	-	100	-	•	812-203015	0190	816-203011	ER25
3435	4730	TC 40 - ER 25 GM / H130 SLIM LINE	40	ER 25 1÷20	35	35	-	-	130	-	•	812-203015	0190	816-203011	ER25
214-91341	4752	TC 40 - ER 25 GM / H160 SLIM LINE	40	ER 25 1÷20	35	35	-	-	160	-	•	812-203015	0190	816-203011	ER25
3437	4753	TC 40 - ER 25 GM / H200 SLIM LINE	40	ER 25 1÷20	35	35	-	-	200	-	•	812-203015	0190	816-203011	ER25
214-91343	4046	TC 50 - ER 16 GM / H100 SLIM LINE	50	ER 16 1÷12	22	22	26	47	100	•	-	812-203013	0190	816-203009	ER16
3440	4756	TC 50 - ER 16 GM / H130 SLIM LINE	50	ER 16 1÷12	22	22	-	-	130	•	-	812-203013	0190	816-203009	ER16
214-91344	4693	TC 50 - ER 16 GM / H160 SLIM LINE	50	ER 16 1÷12	22	22	28	97	160	•	-	812-203013	0190	816-203009	ER16
4019	4757	TC 50 - ER 16 GM / H200 SLIM LINE	50	ER 16 1÷12	22	22	-	-	200	•	-	812-203013	0190	816-203009	ER16
214-91352	4047	TC 50 - ER 20 GM / H100 SLIM LINE	50	ER 20 1÷15	28	28	32	48	100	•	-	812-203014	811-106005	816-203010	ER20
3441	4758	TC 50 - ER 20 GM / H130 SLIM LINE	50	ER 20 1÷15	28	28	-	-	130	•	-	812-203014	811-106005	816-203010	ER20
214-91353	4760	TC 50 - ER 20 GM / H160 SLIM LINE	50	ER 20 1÷15	28	28	32	98	160	•	-	812-203014	811-106005	816-203010	ER20
3012	4070	TC 50 - ER 20 GM / H200 SLIM LINE	50	ER 20 1÷15	28	28	-	-	200	•	-	812-203014	811-106005	816-203010	ER20
214-91346	4071	TC 50 - ER 25 GM / H100 SLIM LINE	50	ER 25 1÷20	35	35	-	-	100	•	-	812-203015	0190	816-203011	ER25
3024	4483	TC 50 - ER 25 GM / H130 SLIM LINE	50	ER 25 1÷20	35	35	-	-	130	•	-	812-203015	0190	816-203011	ER25
214-91347	4759	TC 50 - ER 25 GM / H160 SLIM LINE	50	ER 25 1÷20	35	35	40	103	160	•	-	812-203015	0190	816-203011	ER25
3025	4484	TC 50 - ER 25 GM / H200 SLIM LINE	50	ER 25 1÷20	35	35	-	-	200	•	-	812-203015	0190	816-203011	ER25

ACCESSORIES

p. 648

p. 631

p. 652

ER COLLET CHUCK WITH HEXAGONAL NUT

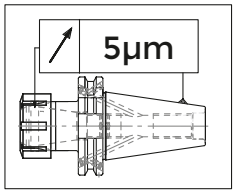

H= 0 > 100 mm - 5 µm
H= 100 > 200 mm - 10 µm

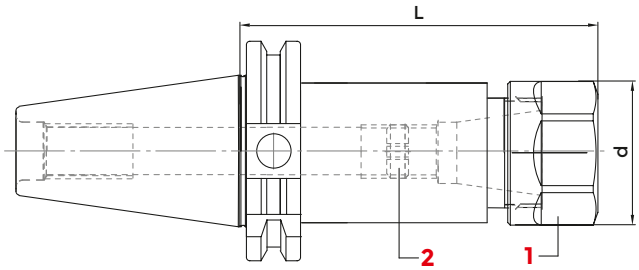

DIN 69871 AD/B - DIN6499/ISO15488

COD. (AD)	COD. (AD+B)	DESCRIPTION	ISO	ER	d	L	G6.3 15000	G6.3 12000	1 NUT	2 SCREW	WRENCH	COLLET
8048	-	TC 30 - ER 16 GE / H 55	30	ER 16 1÷12	28	55	•	-	812-203009	811-102030	816-203012	ER16
8049	-	TC 30 - ER 16 GE / H 100	30	ER 16 1÷12	28	100	•	-	812-203009	811-102030	816-203012	ER16
8050	-	TC 30 - ER 20 GE / H 55	30	ER 20 1÷15	34	55	•	-	812-203010	811-102030	816-203013	ER20
8051	-	TC 30 - ER 20 GE / H 100	30	ER 20 1÷15	34	100	•	-	812-203010	811-102030	816-203013	ER20
3336	4725	TC 40 - ER 11 GE / H 70	40	ER 11 1÷ 8	19	70	•	-	812-203008	811-102114	2905	ER11
3337	4726	TC 40 - ER 11 GE / H 100	40	ER 11 1÷ 8	19	100	•	-	812-203008	811-102114	2905	ER11
3338	4727	TC 40 - ER 11 GE / H 130	40	ER 11 1÷ 8	19	130	•	-	812-203008	811-102114	2905	ER11
3339	4728	TC 40 - ER 11 GE / H 160	40	ER 11 1÷ 8	19	160	•	-	812-203008	811-102114	2905	ER11
214-31241EXA	8068	TC 40 - ER 16 GE / H 70	40	ER 16 1÷12	28	70	•	-	812-203009	811-102038	816-203012	ER16
214-31242EXA	8069	TC 40 - ER 16 GE / H 100	40	ER 16 1÷12	28	100	•	-	812-203009	811-102038	816-203012	ER16
8054	8070	TC 40 - ER 16 GE / H 130	40	ER 16 1÷12	28	130	•	-	812-203009	811-102038	816-203012	ER16
8055	8071	TC 40 - ER 16 GE / H 160	40	ER 16 1÷12	28	160	•	-	812-203009	811-102038	816-203012	ER16
8056	8072	TC 40 - ER 16 GE / H 200	40	ER 16 1÷12	28	200	•	-	812-203009	811-102038	816-203012	ER16
214-31238EXA	8073	TC 40 - ER 20 GE / H 70	40	ER 20 1÷15	34	70	•	-	812-203010	811-106005	816-203013	ER20
8058	8074	TC 40 - ER 20 GE / H 100	40	ER 20 1÷15	34	100	•	-	812-203010	811-106005	816-203013	ER20
8059	8075	TC 40 - ER 20 GE / H 130	40	ER 20 1÷15	34	130	•	-	812-203010	811-106005	816-203013	ER20
8060	8076	TC 40 - ER 20 GE / H 160	40	ER 20 1÷15	34	160	•	-	812-203010	811-106005	816-203013	ER20
8061	8077	TC 40 - ER 20 GE / H 200	40	ER 20 1÷15	34	200	•	-	812-203010	811-106005	816-203013	ER20
8062	8078	TC 50 - ER 16 GE / H 100	50	ER 16 1÷12	28	100	-	•	812-203009	811-102038	816-203012	ER16
8063	8079	TC 50 - ER 16 GE / H 160	50	ER 16 1÷12	28	160	-	•	812-203009	811-102038	816-203012	ER16
8064	8080	TC 50 - ER 16 GE / H 200	50	ER 16 1÷12	28	200	-	•	812-203009	811-102038	816-203012	ER16
8065	8081	TC 50 - ER 20 GE / H 100	50	ER 20 1÷15	34	100	-	•	812-203010	811-106005	816-203013	ER20
8066	8082	TC 50 - ER 20 GE / H 160	50	ER 20 1÷15	34	160	-	•	812-203010	811-106005	816-203013	ER20
8067	8083	TC 50 - ER 20 GE / H 200	50	ER 20 1÷15	34	200	-	•	812-203010	811-106005	816-203013	ER20

ACCESSORIES

p. 649

p. 631

p. 653

ER COLLET CHUCKS - HIGH PRECISION

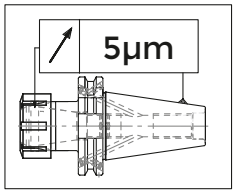

H= 0 > 100 mm - 5 µm
H= 100 > 200 mm - 10 µm

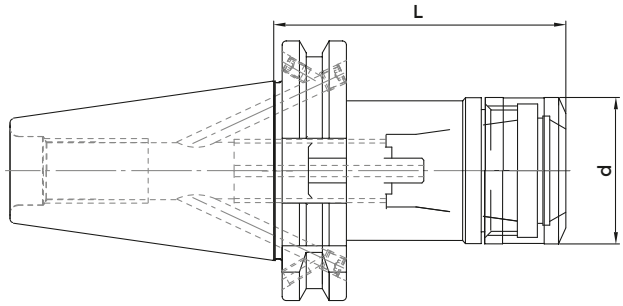

DIN 69871 AD/B

COD.	DESCRIPTION	ISO	L	d	ER	G2.5 30000	NUT	WRENCH
214-91355	TC40H70ER16-HP	40	70	30	16	•	812-203085	816-203069
214-91356	TC40H70ER25-HP	40	70	40	25	•	812-203086	816-203070
214-91357	TC40H70ER32-HP	40	70	50	32	•	812-203087	816-203071
214-91359	TC50H70ER32-HP	50	70	50	32	•	812-203087	816-203071
214-91360	TC40H100ER16-HP	40	100	30	16	•	812-203085	816-203069
214-91362	TC40H100ER25-HP	40	100	40	25	•	812-203086	816-203070
214-91363	TC40H100ER32-HP	40	100	50	32	•	812-203087	816-203071
214-91364	TC50H100ER16-HP	50	100	30	16	•	812-203085	816-203069
214-91367	TC50H100ER25-HP	50	100	40	25	•	812-203086	816-203070
214-91365	TC50H100ER32-HP	50	100	50	32	•	812-203087	816-203071

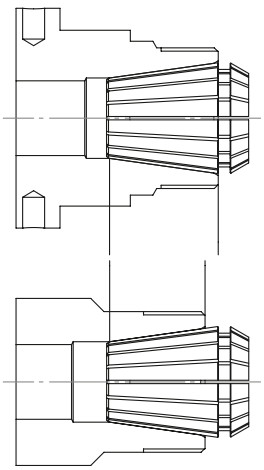

HIGH PRECISION LINE

STANDARD

Kit:
- 1 holder
- 10 collets

COD.	DESCRIPTION
KIT TC40 ER16 HP	N°1 TC40 H70 ER16 HP + N°10 PINZE ER 16 HP
KIT TC40 ER25 HP	N°1 TC40 H70 ER25 HP + N°10 PINZE ER 16 HP
KIT TC40 ER32 HP	N°1 TC40 H70 ER32 HP + N°10 PINZE ER 16 HP

ACCESSORIES

p. 650

p. 631

p. 654

ER COLLET CHUCKS

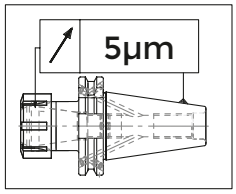

H= 0 > 100 mm - 5 µm
H= 100 > 200 mm - 10 µm

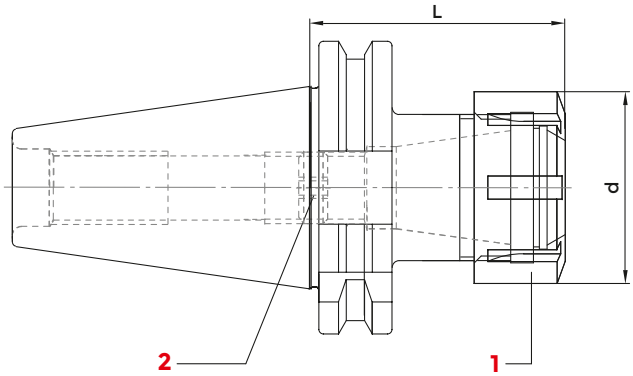

DIN 69871 AD/B - DIN6499/ISO15488

COD. (AD)	COD. (AD+B)	DESCRIPTION	ISO	ER	d	L	G6,3 12000	G6,3 15000	1 NUT	2 SCREW	WRENCH	COLLET
214-31211	-	TC 30 - ER 16 / H 55	30	ER 16 1÷12	32	55	-	•	812-203005	811-102030	816-203000	ER16
214-31213	-	TC 30 - ER 16 / H 100	30	ER 16 1÷12	32	100	-	•	812-203005	811-102030	816-203000	ER16
264-31236	-	TC 30 - ER 20 / H 55	30	ER 20 1÷15	35	55	-	•	812-203006	811-102030	816-203005	ER20
3374	-	TC 30 - ER 20 / H 100	30	ER 20 1÷15	35	100	-	•	812-203006	811-102030	816-203005	ER20
214-31212	-	TC 30 - ER 25 / H 55	30	ER 25 1÷20	42	55	-	•	812-203001	0190	816-203001	ER25
3375	-	TC 30 - ER 25 / H 100	30	ER 25 1÷20	42	100	-	•	812-203001	0190	816-203001	ER25
214-31228	-	TC 30 - ER 32 / H 60	30	ER 32 2÷25	50	60	-	•	812-203002	811-303118	816-203002	ER32
3376	-	TC 30 - ER 32 / H 100	30	ER 32 2÷25	50	100	-	•	812-203002	811-303118	816-203002	ER32
3336	4725	TC 40 - ER 11 / H 70	40	ER 11 1÷8	19	100	-	•	1157 GE	811-102114	2905 CE	ER11
3337	4726	TC 40 - ER 11 / H 100	40	ER 11 1÷8	19	70	-	•	1157 GE	811-102114	2905 CE	ER11
3338	4727	TC 40 - ER 11 / H 130	40	ER 11 1÷8	19	100	-	•	1157 GE	811-102114	2905 CE	ER11
3339	4728	TC 40 - ER 11 / H 160	40	ER 11 1÷8	19	130	-	•	1157 GE	811-102114	2905 CE	ER11
214-31241	214-31362	TC 40 - ER 16 / H 70	40	ER 16 1÷12	32	160	-	•	812-203005	811-102038	816-203000	ER16
214-31242	214-31363	TC 40 - ER 16 / H 100	40	ER 16 1÷12	32	100	-	•	812-203005	811-102038	816-203000	ER16
214-31385	4754	TC 40 - ER 16 / H 130	40	ER 16 1÷12	32	130	-	•	812-203005	811-102038	816-203000	ER16
214-31359	4702	TC 40 - ER 16 / H 160	40	ER 16 1÷12	32	160	-	•	812-203005	811-102038	816-203000	ER16
214-31369	4755	TC 40 - ER 16 / H 200	40	ER 16 1÷12	32	200	-	•	812-203005	811-102038	816-203000	ER16
214-31238	214-31383	TC 40 - ER 20 / H 70	40	ER 20 1÷15	35	70	-	•	812-203006	811-106005	816-203005	ER20
214-31257	214-31384	TC 40 - ER 20 / H 100	40	ER 20 1÷15	35	100	-	•	812-203006	811-106005	816-203005	ER20
214-31386	4830	TC 40 - ER 20 / H 130	40	ER 20 1÷15	35	130	-	•	812-203006	811-106005	816-203005	ER20
3100	4705	TC 40 - ER 20 / H 160	40	ER 20 1÷15	35	160	-	•	812-203006	811-106005	816-203005	ER20
3104	4831	TC 40 - ER 20 / H 200	40	ER 20 1÷15	35	200	-	•	812-203006	811-106005	816-203005	ER20
214-31201	214-31329	TC 40 - ER 25 / H 70	40	ER 25 1÷20	42	70	-	•	812-203001	0190	816-203001	ER25
214-31232	214-31347	TC 40 - ER 25 / H 100	40	ER 25 1÷20	42	100	-	•	812-203001	0190	816-203001	ER25
214-31387	4708	TC 40 - ER 25 / H 130	40	ER 25 1÷20	42	130	-	•	812-203001	0190	816-203001	ER25
214-31345	4709	TC 40 - ER 25 / H 160	40	ER 25 1÷20	42	160	-	•	812-203001	0190	816-203001	ER25
214-31370	4832	TC 40 - ER 25 / H 200	40	ER 25 1÷20	42	200	-	•	812-203001	0190	816-203001	ER25
214-31202	214-31331	TC 40 - ER 32 / H 70	40	ER 32 2÷25	50	70	-	•	812-203002	811-303118	816-203002	ER32
214-31230	214-31348	TC 40 - ER 32 / H 100	40	ER 32 2÷25	50	100	-	•	812-203002	811-303118	816-203002	ER32
214-31389	4712	TC 40 - ER 32 / H 130	40	ER 32 2÷25	50	130	-	•	812-203002	811-303118	816-203002	ER32
214-31346	4713	TC 40 - ER 32 / H 160	40	ER 32 2÷25	50	160	-	•	812-203002	811-303118	816-203002	ER32
214-31371	4076	TC 40 - ER 32 / H 200	40	ER 32 2÷25	50	200	-	•	812-203002	811-303118	816-203002	ER32
214-31215	214-31333	TC 40 - ER 40 / H 70	40	ER 40 3÷32	63	70	-	•	812-203003	0195	816-203003	ER40
214-31286	214-31364	TC 40 - ER 40 / H 100	40	ER 40 3÷32	63	100	-	•	812-203003	0195	816-203003	ER40
214-31390	4716	TC 40 - ER 40 / H 130	40	ER 40 3÷32	63	130	-	•	812-203003	0195	816-203003	ER40
214-31366	4717	TC 40 - ER 40 / H 160	40	ER 40 3÷32	63	160	-	•	812-203003	0195	816-203003	ER40

follows >>

ER COLLET CHUCKS

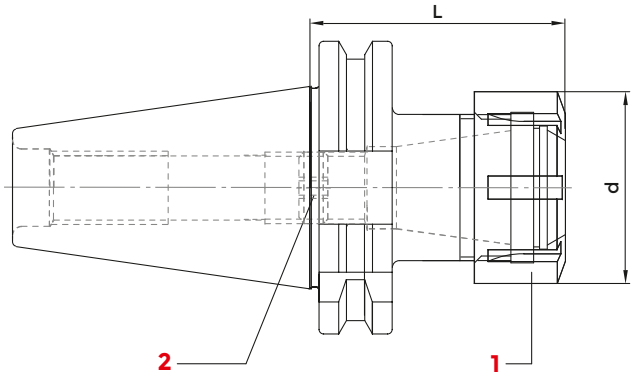

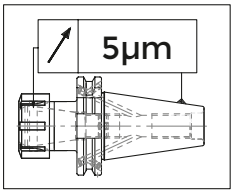

H= 0 > 100 mm - 5 µm
H= 100 > 200 mm - 10 µm

DIN 69871 AD/B - DIN6499/ISO15488

COD. (AD)	COD. (AD+B)	DESCRIPTION	ISO	ER	d	L	G6,3 12000	G6,3 15000	1 NUT	2 SCREW	WRENCH	COLLET
3103	4718	TC 40 - ER 40 / H 200	40	ER 40 3÷32	63	200	-	•	812-203003	0195	816-203003	ER40
154	4719	TC 40 - ER 50 / H 85	40	ER 50 6÷36	78	85	-	•	812-203007	0195	816-203004	ER50
3353	-	TC 45 - ER 32 / H 70	45	ER 32 2÷25	50	70	-	•	812-203002	811-303118	816-203002	ER32
3106	-	TC 45 - ER 32 / H 100	45	ER 32 2÷25	50	100	-	•	812-203002	811-303118	816-203002	ER32
3354	-	TC 45 - ER 32 / H 130	45	ER 32 2÷25	50	130	-	•	812-203002	811-303118	816-203002	ER32
184	-	TC 45 - ER 32 / H 160	45	ER 32 2÷25	50	160	-	•	812-203002	811-303118	816-203002	ER32
3355	-	TC 45 - ER 40 / H 80	45	ER 40 3÷32	63	80	-	•	812-203003	0195	816-203003	ER40
264-31233	214-31381	TC 50 - ER 16 / H 70	50	ER 16 1÷12	32	70	•	-	812-203005	811-102038	816-203000	ER20
214-31365	4731	TC 50 - ER 16 / H 100	50	ER 16 1÷12	32	100	•	-	812-203005	811-102038	816-203000	ER20
214-31367	4732	TC 50 - ER 16 / H 160	50	ER 16 1÷12	32	160	•	-	812-203005	811-102038	816-203000	ER20
214-31373	4806	TC 50 - ER 16 / H 200	50	ER 16 1÷12	32	200	•	-	812-203005	811-102038	816-203000	ER20
264-31234	-	TC 50 - ER 20 / H 70	50	ER 20 1÷15	35	70	•	-	812-203006	811-106005	816-203005	ER20
214-31380	4733	TC 50 - ER 20 / H 100	50	ER 20 1÷15	35	100	•	-	812-203006	811-106005	816-203005	ER20
3111	4734	TC 50 - ER 20 / H 160	50	ER 20 1÷15	35	160	•	-	812-203006	811-106005	816-203005	ER20
3112	4807	TC 50 - ER 20 / H 200	50	ER 20 1÷15	35	200	•	-	812-203006	811-106005	816-203005	ER20
214-31250	214-31341	TC 50 - ER 25 / H 70	50	ER 25 1÷20	42	70	•	-	812-203001	0190	816-203001	ER25
214-31342	4736	TC 50 - ER 25 / H 100	50	ER 25 1÷20	42	100	•	-	812-203001	0190	816-203001	ER25
214-31368	4737	TC 50 - ER 25 / H 160	50	ER 25 1÷20	42	160	•	-	812-203001	0190	816-203001	ER25
214-31374	4808	TC 50 - ER 25 / H 200	50	ER 25 1÷20	42	200	•	-	812-203001	0190	816-203001	ER25
214-31203	214-31335	TC 50 - ER 32 / H 70	50	ER 32 2÷25	50	70	•	-	812-203002	811-303118	816-203002	ER32
214-31336	4739	TC 50 - ER 32 / H 100	50	ER 32 2÷25	50	100	•	-	812-203002	811-303118	816-203002	ER32
3362	4740	TC 50 - ER 32 / H 130	50	ER 32 2÷25	50	130	•	-	812-203002	811-303118	816-203002	ER32
214-31337	4741	TC 50 - ER 32 / H 160	50	ER 32 2÷25	50	160	•	-	812-203002	811-303118	816-203002	ER32
214-31375	4742	TC 50 - ER 32 / H 200	50	ER 32 2÷25	50	200	•	-	812-203002	811-303118	816-203002	ER32
3382	4809	TC 50 - ER 32 / H 250	50	ER 32 2÷25	50	250	•	-	812-203002	811-303118	816-203002	ER32
214-31204	214-31338	TC 50 - ER 40 / H 80	50	ER 40 3÷32	63	80	•	-	812-203003	0195	816-203003	ER40
214-31339	4744	TC 50 - ER 40 / H 100	50	ER 40 3÷32	63	100	•	-	812-203003	0195	816-203003	ER40
3366	4745	TC 50 - ER 40 / H 130	50	ER 40 3÷32	63	130	•	-	812-203003	0195	816-203003	ER40
214-31340	4746	TC 50 - ER 40 / H 160	50	ER 40 3÷32	63	160	•	-	812-203003	0195	816-203003	ER40
214-31376	4747	TC 50 - ER 40 / H 200	50	ER 40 3÷32	63	200	•	-	812-203003	0195	816-203003	ER40
3369	4810	TC 50 - ER 50 / H 100	50	ER 50 6÷36	78	100	•	-	812-203007	0195	816-203004	ER50
8044	8045	TC 50 - ER 50 / H 160	50	ER 50 6÷36	78	160	•	-	812-203007	0195	816-203004	ER50

ACCESSORIES

p. 649

p. 631

p. 653

EQUIPMENT CASE WITH REDUCED SET OF ER COLLETS, AD SHAPE COLLET CHUCK AND WRENCH

COD.	DESCRIPTION	ISO	1 CHUCK	2 CASE	WRENCH	COLLET
7772	KIT Rid TC 40 / H 70 - ER 25	40	214-31201	7022	816-203001	ER25D: Ø 4 - 6 - 8 -10 -12 -16
7773	KIT Rid TC 40 / H 70 - ER 32	40	214-31202	7023	816-203002	ER32D: Ø 4 - 6 - 8 -10 -12 -16 - 20
7774	KIT Rid TC 40 / H 70 - ER 40	40	214-31215	7024	816-203003	ER40D: Ø 4 - 6 - 8 -10 -12 -16 - 20 -25
7775	KIT Rid TC 50 / H 70 - ER 32	50	214-31203	7023	816-203002	ER32D: Ø 4 - 6 - 8 -10 -12 -16 - 20
7776	KIT Rid TC 50 / H 80 - ER 40	50	214-31204	7024	816-203003	ER40D: Ø 4 - 6 - 8 -10 -12 -16 - 20 -25

EQUIPMENT CASE WITH COMPLETE SET OF ER COLLETS, AD SHAPE COLLET CHUCK AND WRENCH

COD.	DESCRIPTION	ISO	1 CHUCK	2 CASE	WRENCH	COLLET
7779	KIT TC 40 /H 70 - ER25	40	214-31201	7022	816-203001	ER25D: Ø 2 ÷ 16 (15 Pinze)
7780	KIT TC 40 /H 70 - ER32	40	214-31202	7023	816-203002	ER32D: Ø 3 ÷ 20 (18 Pinze)
7781	KIT TC 40 /H 70 - ER40	40	214-31215	7024	816-203003	ER40D: Ø 4 ÷ 26 (23 Pinze)
7782	KIT TC 50 /H 70 - ER32	50	214-31203	7023	816-203002	ER32D: Ø 3 ÷ 20 (18 Pinze)
7783	KIT TC 50 /H 80 - ER40	50	214-31204	7024	816-203003	ER40D: Ø 4 ÷ 26 (23 Pinze)

ER COLLET CHUCKS - HIGH SPEED LINE

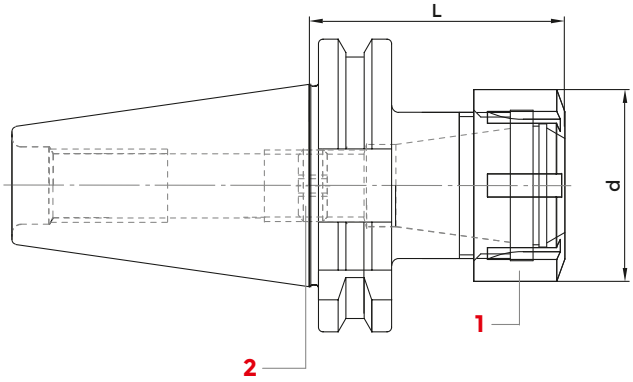

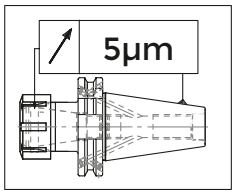

H= 0 > 100 mm - 5 µm
H= 100 > 200 mm - 10 µm

DIN 69871 AD - DIN 6499/ISO15488

HIGH SPEED LINE

COD.	DESCRIPTION	ISO	ER	d	L	G2.5 30000	2 SCREW
214-91301	TC40H70ER16	40	16	32	70	•	811-102038
214-91324	TC40H70ER20	40	20	35	70	•	811-106005
214-91302	TC40H70ER25	40	25	42	70	•	0190
214-91303	TC40H70ER32	40	32	50	70	•	811-303118
214-91304	TC40H70ER40	40	40	63	70	•	0195
214-91306	TC50H70ER32	50	32	50	70	•	811-303118
214-91308	TC40H100ER16	40	16	32	100	•	811-102038
214-91325	TC40H100ER20	40	20	35	100	•	811-106005
214-91309	TC40H100ER25	40	25	42	100	•	0190
214-91310	TC40H100ER32	40	32	50	100	•	811-303118
214-91312	TC50H100ER16	50	16	32	100	•	811-102038
214-91313	TC50H100ER25	50	25	42	100	•	0190
214-91314	TC50H100ER32	50	32	50	100	•	811-303118
214-91316	TC40H160ER16	40	16	32	160	•	811-102038
214-91317	TC40H160ER25	40	25	42	160	•	0190
214-91318	TC40H160ER32	40	32	50	160	•	811-303118

ACCESSORIES

p. 649

p. 631

p. 653

DIN6388 (EOC) COLLET CHUCKS

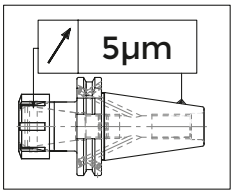

H= 0 > 100 mm - 5 µm
H= 100 > 200 mm - 10 µm

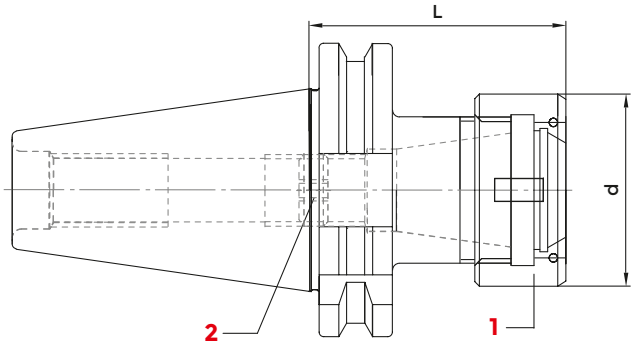

DIN 69871 AD/B - DIN6388

COD.	DESCRIPTION	ISO	EOC	d	L	G6.3 12000	G6.3 15000	1 NUT	WRENCH	2 COLLET
8693	TC 40-EOC 16/ H70	40	EOC 16 2÷16	43	70	-	•	GOC16	816-203032	EOC16
8696	TC 40-EOC 25/ H70	40	EOC 25 2÷25	60	70	-	•	GOC25	816-203034	EOC25
8699	TC 40-EOC 32/ H80	40	EOC32 3÷32	72	80	-	•	GOC32	816-203036	EOC32
8703	TC 50-EOC 25/ H100	50	EOC 25 2÷25	60	100	•	-	GOC25	816-203034	EOC25
8705	TC 50-EOC 32/ H80	50	EOC 32 3÷32	72	80	•	-	GOC32	816-203036	EOC32
8706	TC 50-EOC 32/ H130	50	EOC 32 3÷32	72	130	•	-	GOC32	816-203036	EOC32

ER SHORT COLLET CHUCK WITH INNER NUT

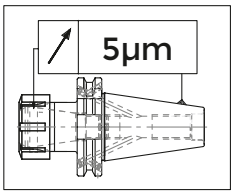

H= 0 > 100 mm - 5 µm
H= 100 > 200 mm - 10 µm

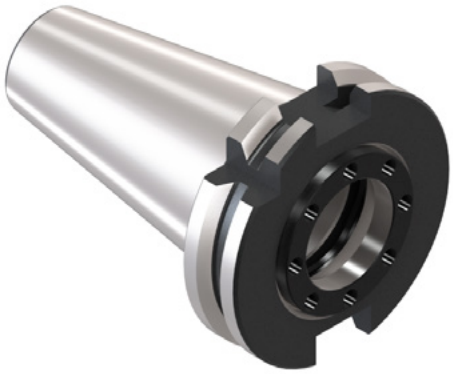

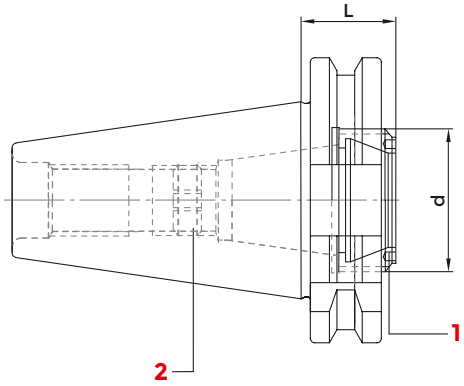

DIN 69871 AD - DIN 69871 A

COD.	DESCRIPTION	ISO	L	ER	G6.3 12000	G6.3 15000	1 NUT	WRENCH	2 COLLET
214-31377	TC 40 - ER25 GA	40	21	ER 25 1÷20	-	•	812-203057	CHER25EX	ER25
264-31215	TC 40 - ER32 GA	40	21	ER 32 2÷25	-	•	812-203032	CHER32EX	ER32
214-31378	TC 50 - ER32 GA	50	21	ER 32 2÷25	•	-	812-203032	CHER32EX	ER32

ACCESSORIES

p. 706

p. 705

p. 655

p. 651

p. 631

p. 651

ER COLLET CHUCKS - HIGH SPEED LINE

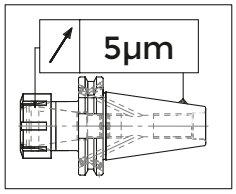

H= 0 > 100 mm - 5 µm
H= 100 > 200 mm - 10 µm

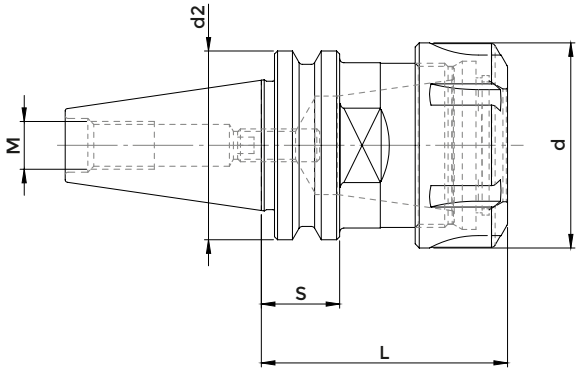

DIN 69871 AD/B - DIN6499/ISO15488

RIGHT SPIN

COD.	DESCRIPTION	ISO	ER	d	d2	L	S	M	G2,5 30000	1 NUT	2 WRENCH	3 COLLET	4 LOCKING NUT
2545	ISO 30 AV - ER 32 / H 60	30	ER 32 2÷25	50	46,00	60	15,9	M 12	•	812-203002	816-203002	ER32	0559
2546	ISO 30 AV - ER 40 / H 65	30	ER 40 3÷32	63	46,00	65	15,9	M 12	•	812-203003	816-203003	ER40	0561
264-31240	ISO 30 AV - ER 25 / H 65	30	ER 25 1÷20	42	50,00	65	15,9	M 12	•	812-203001	816-203001	ER25	-
264-31238	ISO 30 AV - ER 32 / H 50	30	ER 32 2÷25	50	50,00	50	15,9	M 12	•	812-203002	816-203002	ER32	0559
264-31239	ISO 30 AV - ER 32 / H 68	30	ER 32 2÷25	50	50,00	68	15,9	M 12	•	812-203002	816-203002	ER32	0559
2562	ISO 30 AV - ER 40 / H 57	30	ER 40 3÷32	63	50,00	57	15,9	M 12	•	812-203003	816-203003	ER40	0561
2563	ISO 30 AV - ER 40 / H 68	30	ER 40 3÷32	63	50,00	68	15,9	M 12	•	812-203003	816-203003	ER40	0561
2522	ISO 30 AV - ER 32 / H 63	30	ER 32 2÷25	50	58,00	63	15,9	M 12	•	812-203002	816-203002	ER32	0559
2567	ISO 40 AV - ER 32 / H 63	40	ER 32 2÷25	50	58,00	63	15,9	M 16	•	812-203002	816-203002	ER32	0559
2568	ISO 40 AV - ER 32 / H 68	40	ER 32 2÷25	50	63,55	68	15,9	M 16	•	812-203002	816-203002	ER32	0559
2521	ISO 40 AV - ER 40 / H 72	40	ER 40 3÷32	63	63,55	68	15,9	M 16	•	812-203003	816-203003	ER40	0561

LEFT SPIN

COD.	DESCRIPTION	ISO	ER	d	d2	L	S	M	G2,5 30000	1 NUT	2 WRENCH	3 COLLET	4 LOCKING NUT
2545SX	ISO 30 AV - ER 32 / H 60	30	ER 32 2÷25	50	46,00	60	15,9	M 12	•	812-203035	816-203002	ER32	0560
2546SX	ISO 30 AV - ER 40 / H 65	30	ER 40 3÷32	63	46,00	65	15,9	M 12	•	812-203034	816-203003	ER40	0580
2519SX	ISO 30 AV - ER 32 / H 50	30	ER 32 2÷25	50	50,00	50	15,9	M 12	•	812-203035	816-203002	ER32	0560
2520SX	ISO 30 AV - ER 32 / H 68	30	ER 32 2÷25	50	50,00	68	15,9	M 12	•	812-203035	816-203002	ER32	0560
2562SX	ISO 30 AV - ER 40 / H 57	30	ER 40 3÷32	63	50,00	57	15,9	M 12	•	812-203034	816-203003	ER40	0580
2563SX	ISO 30 AV - ER 40 / H 68	30	ER 40 3÷32	63	50,00	68	15,9	M 12	•	812-203034	816-203003	ER40	0580
2522SX	ISO 30 AV - ER 32 / H 63	30	ER 32 2÷25	50	58,00	63	15,9	M 12	•	812-203035	816-203002	ER32	0560

ACCESSORIES

p. 649

p. 631

p. 653

ER COLLET CHUCKS - FLANGE W/OUT LUGS

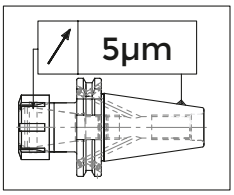

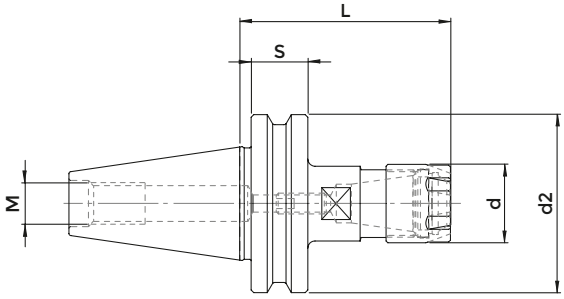

H= 0 > 100 mm - 5 µm
H= 100 > 200 mm - 10 µm

HIGH SPEED LINE

COD.	DESCRIPTION	ISO	ER	d	d2	L	S	M	G2,5 30000	NUT	WRENCH	COLLET
ISO20H49ER16M	ISO 20 AV - ER 16 / H 49	20	ER 16 1÷12	22	30	49	15,9	M 8	•	1229	816-203009	ER16
264-31237	ISO 30 AV - ER 16 / H 60	30	ER 16 1÷12	22	50	60	15,9	M 12	•	1229	816-203009	ER16
4171	ISO 30 AV - ER 20 / H 53	30	ER 20 1÷15	28	50	53	15,9	M 12	•	1230	816-203010	ER20

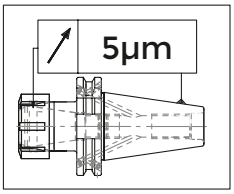

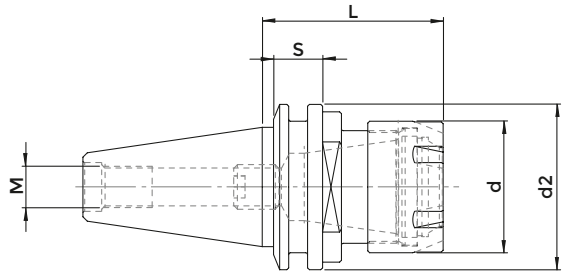

H= 0 > 100 mm - 5 µm
H= 100 > 200 mm - 10 µm

HIGH SPEED LINE

COD.	DESCRIPTION	ISO	ER	d	d2	L	S	M	G2,5 30000	NUT	WRENCH	COLLET
3523	ISO 30 CORTINI - ER 25 GM	30	ER 25 1÷20	35	44	48	13	M 12	•	1231	816-203011	ER25

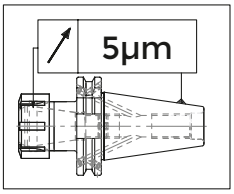

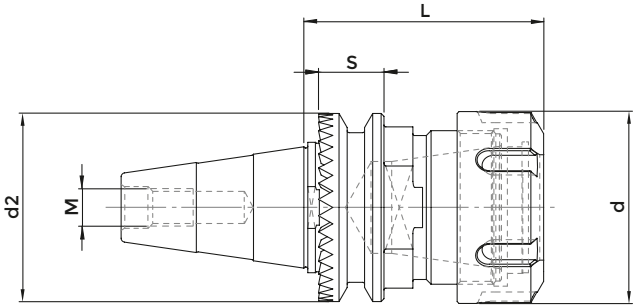

H= 0 > 100 mm - 5 µm
H= 100 > 200 mm - 10 µm

HIGH SPEED LINE

COD.	DESCRIPTION	ISO	ER	d	d2	L	S	M	G2,5 30000	NUT	WRENCH	COLLET
2116	ISO 30 SCM - ER 32	30	ER 32 2÷25	50	49	55	17	M 10	•	812-203002	816-203002	ER32
2117	ISO 30 SCM - ER 40	30	ER 40 3÷32	63	49	74	17	M 10	•	812-203003	816-203003	ER40
2118	ISO 30 SCM - EOC 25	30	EOC 25 2÷25	60	49	70	17	M 10	•	GOC25	816-203034	EOC25

MILLING CHUCKS

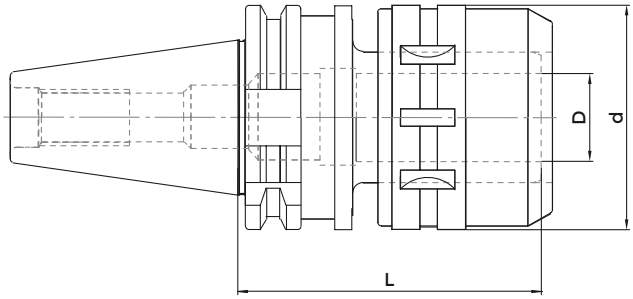

DIN 69871 AD

COD. (AD)	COD. (AD+B)	DESCRIPTION	ISO	d	D	L	G6.3 12000	COLLET
9626	-	TC 40- PC 16 / H 65	40	34	16	65	•	0805
214-01308	214-01310	TC 40 - PC 20 / H 90	40	54	20	90	•	K20D..
214-01301	-	TC 40 - PC 20 / H 105	40	54	20	105	•	K20D..
-	214-01311	TC 40 - PC 32 / H 95	40	63	32	95	•	K32D..
214-01302	-	TC 40 - PC 32 / H 105	40	72	32	105	•	K32D..
-	214-01312	TC 50 - PC 20 / H 85	50	50	20	85	•	K20D..
214-01304	-	TC 50 - PC 20 / H 105	50	54	20	105	•	K20D..
-	9637	TC 50 - PC 20 / H 135	50	50	20	135	•	K20D..
-	214-01313	TC 50 - PC 32 / H 90	50	63	32	90	•	K32D..
214-01305	5227	TC 50 - PC 32 / H 105	50	72	32	105	•	K32D..
214-01306	-	TC 50 - PC 32 / H 135	50	72	32	135	•	K32D..

Supplied with wrench

MILLING CHUCK Ø	SPECIFICATION DIN 7178-1	TOLLERANCE	RUN-OUT (3D)	CLAMPING TORQUE
C20	AT3	TC40 (0~+0,003)	0~0,01	980M.m (100 Kgf.m)
C32	AT3	TC50 (0~+0,004)	0~0,01	3430M.m (350 Kgf.m)

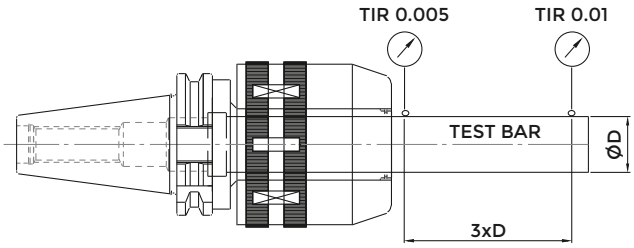

ACCESSORIES

p. 707

MILLING CHUCKS - HIGH SPEED LINE

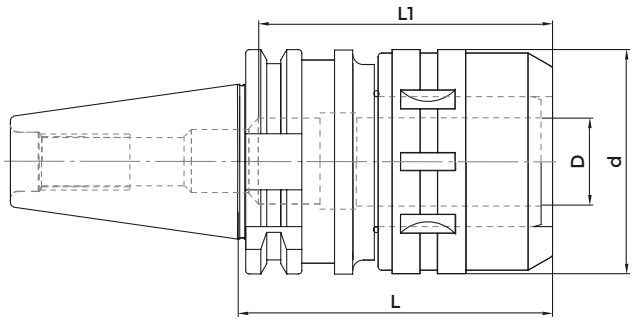

DIN 69871 A

HIGH SPEED LINE

COD.	DESCRIPTION	ISO	D	d	L	L1	G6.3 20000	COLLET
214-01202	TC40H105C20HS	40	20	54	105	70	•	K20D..
214-01203	TC40H105C32HS	40	32	74	105	100	•	K32D..
214-01205	TC50H105C32HS	50	32	74	105	100	•	K32D..

Supplied with wrench

MILLING CHUCK Ø	SPECIFICATION DIN 7178-1	TOLLERANCE	RUN-OUT (3D)	CLAMPING TORQUE
C20	AT3	TC40 (0~+0,003)	0~0,01	980M.m (100 Kgf.m)
C32	AT3	TC50 (0~+0,004)	0~0,01	3430M.m (350 Kgf.m)

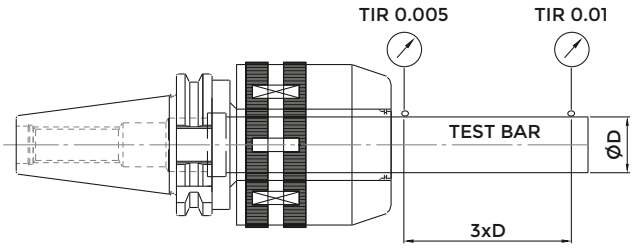

ACCESSORIES

p. 707

MILLING KIT: CHUCK, WRENCH, COLLET

COD.	DESCRIPTION	ISO	CHUCK	CASE	WRENCH	COLLET
KITTC40C20	KIT TC 40 - PC 20 / H 90	40	214-01308	3695	2900	K20D.. Ø 6 - 8 - 10 - 12 - 16
KITTC40C20DK	KIT TC 40 - PC 20 / H 105	40	214-01301	3695	2900	K20D.. Ø 6 - 8 - 10 - 12 - 16
KITTC40C32	KIT TC 40 - PC 32 / H 105	40	214-01302	3695	816-203036	K32D.. Ø 6 - 8 - 10 - 12 - 16 - 20 - 25
KITTC50C20	KIT TC 50 - PC 20 / H 105	50	214-01304	3695	2900	K20D.. Ø 6 - 8 - 10 - 12 - 16
KITTC50C32	KIT TC 50 - PC 32 / H 105	50	214-01305	3695	816-203036	K32D.. Ø 6 - 8 - 10 - 12 - 16 - 20 - 25

DRILL CHUCKS ADAPTERS

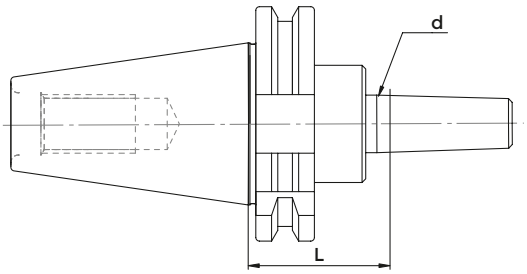

DIN 69871 AD - DIN 238

COD.	DESCRIPTION	ISO	L	d	G6,3 8000
3867	TC 30 - B 12	30	40	12,065	•
3868	TC 30 - B 16	30	40	15,733	•
3869	TC 40 - B 12	40	40	12,065	•
216-31201	TC 40 - B 16	40	40	15,733	•
216-31202	TC 40 - B 18	40	40	17,780	•
216-31203	TC 50 - B 16	50	40	15,733	•
216-31204	TC 50 - B 18	50	40	17,780	•

DRILL CHUCKS - RIGHT SPIN

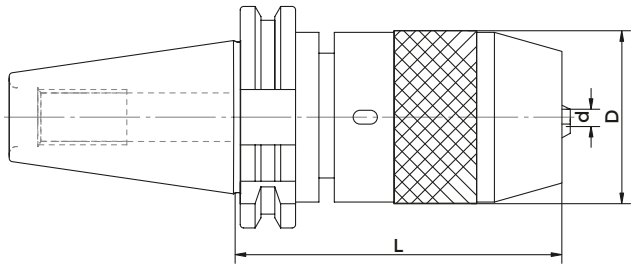

DIN 69871 A

COD.	DESCRIPTION	ISO	DRILL RANGE	L	d	G6,3 8000	CLAMPS	CROSS	WRENCH
8583	TC 30 - DC 13	30	0,5 ÷ 13	100	50	•	832-012020	9021	816-111024
252-11211	TC 40 - DC 13	40	0,5 ÷ 13	90	50	•	832-012020	9021	816-111024
252-11212	TC 40 - DC 16	40	3 ÷ 16	115	57	•	832-012021	9023	816-111025
252-11213	TC 50 - DC 13	50	0,5 ÷ 13	100	50	•	832-012020	9021	816-111024
252-11214	TC 50 - DC 16	50	3 ÷ 16	105	57	•	832-012021	9023	816-111025

DRILL CHUCKS - LEFT AND RIGHT SPIN

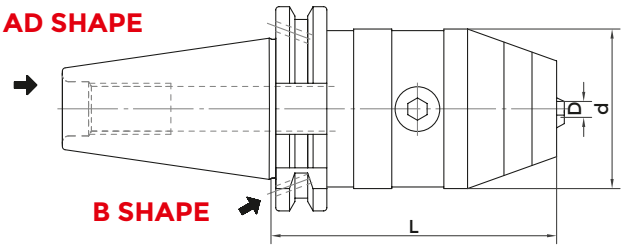

DIN 69871 ADB

COD. (AD)	COD. (AD+B)	DESCRIPTION	ISO	DRILL RANGE	L	d	G6,3 8000	WRENCH
252-11301	8589	TC 40 - DCU 13	40	0,5 ÷ 13	90	50	•	816-152001
252-11302	8590	TC 40 - DCU 16	40	3 ÷ 16	95	50	•	816-152001
252-11303	8591	TC 50 - DCU 13	50	0,5 ÷ 13	90	50	•	816-152001
252-11304	8592	TC 50 - DCU 16	50	3 ÷ 16	95	50	•	816-152001

TENSION/COMPRESSION QUICK CHANGE TAPPING HEADS

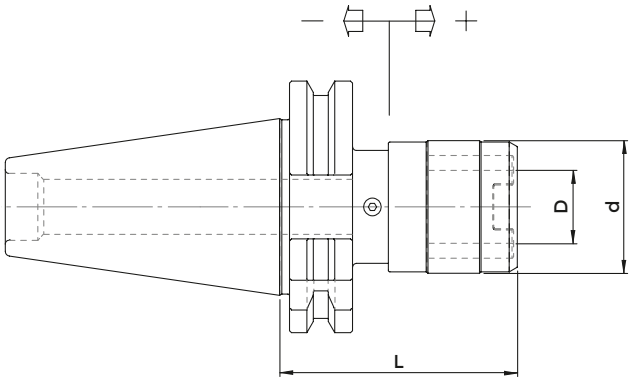

DIN 69871 A

COD.	DESCRIPTION	ISO	D	d	L	G6,3 8000	RANGE	TAP SIZE RANGE
M3008	TC 30 - B. 1	30	19	38	60	•	- 7,5 + 7,5	M 3 ÷ M 12 (*18)
2996	TC 30 - B. 2	30	31	55	100	•	- 12,5 + 12,5	M 6 ÷ M 20 (*30)
M3010	TC 40 - B. 1	40	19	38	60	•	- 7,5 + 7,5	M 3 ÷ M 12 (*18)
M3110	TC 40 - B. 2	40	31	55	100	•	- 12,5 + 12,5	M 6 ÷ M 20 (*30)
M3210	TC 40 - B. 3	40	48	79	140	•	- 20,0 + 20,0	M 14 ÷ M 33 (*48)
3380	TC 45 - B. 1	45	19	38	60	•	- 7,5 + 7,5	M 3 ÷ M 12 (*18)
3381	TC 45 - B. 2	45	31	55	84	•	- 12,5 + 12,5	M 6 ÷ M 20 (*30)
M3030	TC 50 - B. 1	50	19	38	62	•	- 7,5 + 7,5	M 3 ÷ M 12 (*18)
M3130	TC 50 - B. 2	50	31	55	83	•	- 12,5 + 12,5	M 6 ÷ M 20 (*30)
M3230	TC 50 - B. 3	50	48	79	133	•	- 20,0 + 20,0	M 14 ÷ M 33 (*48)

* Adapters with screws

SOLID TAPPING HEADS

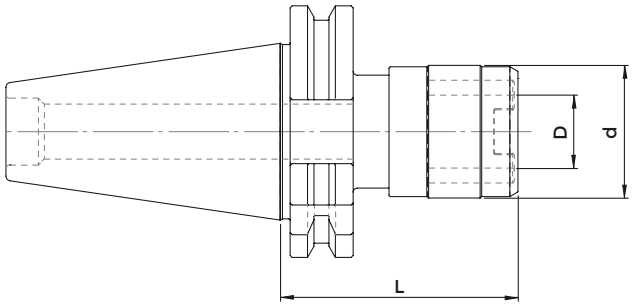

DIN 69871 A

COD.	DESCRIPTION	ISO	D	d	L	G6,3 8000	TAP SIZE RANGE
							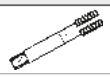
4946	TC 30 - B. 1 FISSO	30	19	33	59	•	M 3 ÷ M 12 (*18)
4947	TC 30 - B. 2 FISSO	30	31	50	80	•	M 6 ÷ M 20 (*30)
M5020	TC 40 - B. 1 FISSO	40	19	33	59	•	M 3 ÷ M 12 (*18)
M5040	TC 40 - B. 2 FISSO	40	31	50	86	•	M 6 ÷ M 20 (*30)
4991	TC 40 - B. 3 FISSO	40	48	72	122	•	M 14 ÷ M 33 (*48)
3062	TC 50 - B. 1 FISSO	50	19	33	75	•	M 3 ÷ M 12 (*18)
4950	TC 50 - B. 2 FISSO	50	31	50	98	•	M 6 ÷ M 20 (*30)
4992	TC 50 - B. 3 FISSO	50	48	72	122	•	M 14 ÷ M 33 (*48)

BLANK BARS

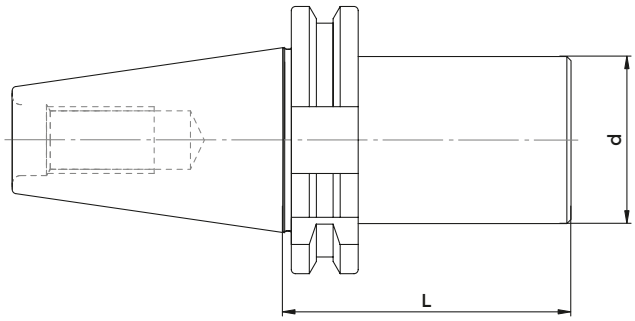

DIN 69871 A

COD.	DESCRIPTION	ISO	d	L
217-41204	TC 40 - D. 40 ST	40	40	160
4356	TC 40 - D. 50 ST	40	50	200
217-41205	TC 40 - D. 63 ST	40	63	160
217-41206	TC 40 - D. 63 ST	40	63	250
4362	TC 50 - D. 40 ST	50	40	160
4364	TC 50 - D. 63 ST	50	63	250
217-41207	TC 50 - D. 80 ST	50	80	160
217-41208	TC 50 - D. 80 ST	50	80	200
217-41209	TC 50 - D. 80 ST	50	80	300

BT CHUCKS

JIS-B 6339

TAPER SHANKS DATA SHEET

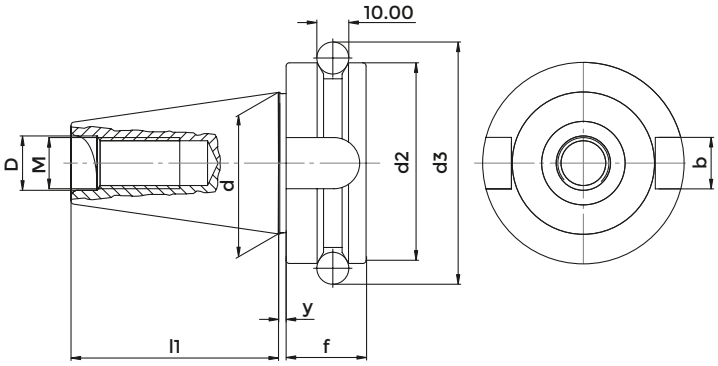

JIS-B 6339 - MAS 403/BT SHAPE A

ISO	d	l1	D	M	y	d2	f	d3	b
30	31,75	48,4	12,5	M12	2	46	20	56,144	16,1
40	44,45	65,4	17	M16	2	63	25	75,68	16,1
50	69,85	101,8	25	M24	3	100	35	110,02	25,7

TAPER SHANKS DATA SHEET

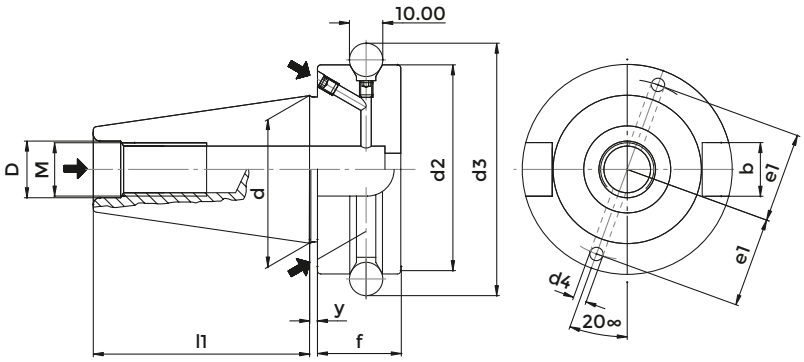

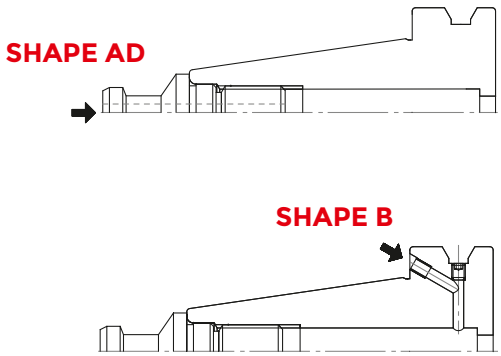

JIS-B 6339 MAS 403/BT SHAPE AD/B

ISO	d	l1	D	M	y	d2	f	d3	d4	el	b
40	44,45	65,4	17	M16	2	63	25	75,68	4	27	16,1
50	69,85	101,8	25	M24	3	100	35	110,02	5	42	25,7

For coolant through V-flange bores (B) or center of toolholders (AD). For central coolant, the V-flange channels are closed by socket screws.

TECHNICAL FEATURES
KINTEK DIN TOOLHOLDERS

JIS-B 6339 MAS 403/BT SHAPE A-AD/B

All Kintek Toolholders are manufactured according to DIN norm.

COLLET CHUCK RUNOUT ACCURACY

The norm DIN6391 permits a runout error between external cone and internal cone / collet seat of 0.016.

Our production has a runout accuracy which is guaranteed to be within 0,003 / 0,010 m at the tool seat.

SHELL END MILL ADAPTOR RUNOUT ACCURACY

Our shell end mill adaptors meet the requirements of the norm DIN6358, which prescribes for diameters 16-22-27-32-40 a runout accuracy of: 0, 01 for SK 30/40 0,015 for SK 50.

WELDON END MILL HOLDER RUNOUT ACCURACY

According to the norm DIN6359-1 Weldon end mill holders have to meet the following requirements:
BORE: H5 tolerance
RUNOUT ACCURACY: <0.01 (per ISO 40)
Our end mill adaptors ensure the prescribed holes' tolerance and have a runout accuracy which is normally 0.005.

BALANCING

The major part of toolholders of this category can run up to 8000 rpm grade G 6,3 or 12000 rpm. Besides the descriptive and dimensional table of products, you can find the addictive balancing grade.

CONSTRUCTIVE FEATURES

- Manufactured with Casehardening Steel.
- Casehardened with depth 0,6 - 0,8 mm
- Hardened-Tempered
- Hardness HRC 58+-2, Strength 800-1000 N/mm^2
- Black oxided
- Internal and external grinding finished.

NEW HIGH-SPEED BALANCING TOOLHOLDERS

The new high-speed toolholders are balanced in the Grade G 2,5 at 25000 rpm.

CONSTRUCTIVE FEATURES FOR HIGH-SPEED TOOLHOLDERS

- Manufactured with casehardening Steel.
- Casehardened with depth 0,6 - 0,8 mm
- Hardened-Tempered
- Hardness HRC 58+-2, Strength 800-1000 N/mm^2
- Black oxided
- Internal and external grinding finish of the cone
- Grinding finish on the front side and on the thread of collet nuts.
- Tested 100% with certified measuring instruments and supplied with balancing certificate

CONE TOLERANCE

According to the class AT3

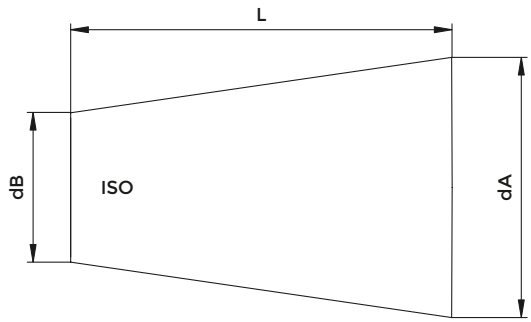

ISO	L	dA-dB	AT3
30	42	12.250	+0.002
40	59	17.208	+0.003
50	92	26.833	+0.004

SHORT TYPE WELDON END MILL HOLDERS

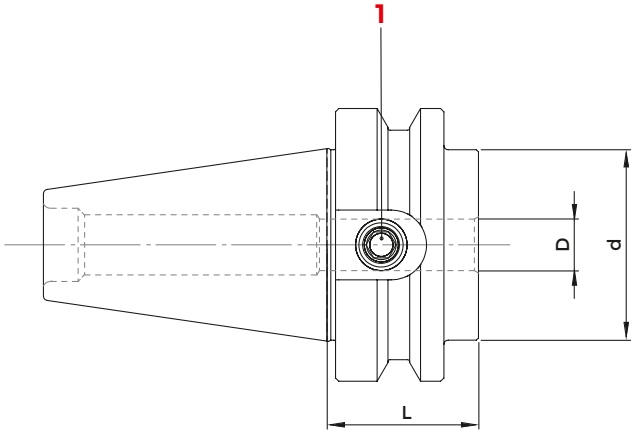

JIS-B 6339 MAS 403/BT SHAPE AD/B - DIN 1835 B

COD. (AD)	COD. (AD+B)	DESCRIPTION	ISO	D	L	d	G6.3 12000	1 SCREW 1	1 SCREW 2
263-115630	-	BT 30- WE 12 / H35	30	12	35	42	•	811-106013	-
263-115640	-	BT 30 - WE 16 / H35	30	16	35	42	•	811-106026	-
263-115650	-	BT 30 - WE 20 / H35	30	20	35	43	•	811-106024	-
263-115660	-	BT 30 - WE 25 / H35	30	25	35	45,5	•	811-106026	-
3053	-	BT 40 - WE 12 / H 35	40	12	35	44	•	811-106005	-
213-11493	5122	BT 40 - WE 16 / H 35	40	16	35	44	•	0068	-
213-11494	5123	BT 40 - WE 20 / H 35	40	20	35	44	•	811-106027	-
213-11495	-	BT 40 - WE 25 / H 35	40	25	35	44	•	811-106026	-
213-11496	4554	BT 40 - WE 25 / H 60	40	25	60	49	•	811-106026	811-106014
3069	-	BT 40 - WE 32 / H 40	40	32	40	44	•	0074	-
213-11497	4556	BT 40 - WE 32 / H 70	40	32	70	72	•	811-106026	4977
213-11498	-	BT 50 - WE 16 / H 44	50	16	44	70	•	811-106006	-
213-11499	5126	BT 50 - WE 20 / H 44	50	20	44	70	•	811-106007	-
263-11401	5127	BT 50 - WE 25 / H 44	50	25	44	70	•	811-106008	-
263-11402	5128	BT 50 - WE 32 / H 44	50	32	44	70	•	811-106009	-
8468	8473	BT 50 - WE 40 / H 44	50	40	44	70	•	0259	-

WELDON END MILL HOLDERS

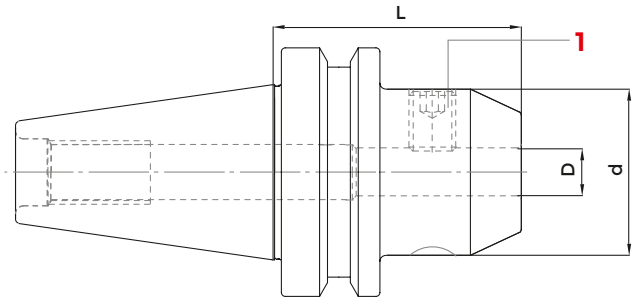

JIS-B 6339 MAS 403/BT SHAPE AD/B - DIN 1835 B

COD. (AD)	COD. (AD+B)	DESCRIPTION	ISO	D	L	d	G6.3 12000	1 SCREW
263-11501	-	BT 30 - WE 6 / H 50	30	6	50	25	•	811-106001
263-11502	-	BT 30 - WE 8 / H 50	30	8	50	28	•	811-106002
263-11503	-	BT 30 - WE 10 / H 50	30	10	50	35	•	811-106004
263-11504	-	BT 30 - WE 12 / H 55	30	12	55	42	•	811-106005
263-11505	-	BT 30 - WE 16 / H 63	30	16	63	48	•	811-106006
263-11506	-	BT 30 - WE 20 / H 70	30	20	70	52	•	811-106007
213-11413	4909	BT 40 - WE 6 / H 50	40	6	50	25	•	811-106001
213-11434	5863	BT 40 - WE 6 / H 100	40	6	100	25	•	811-106001
8004	8021	BT 40 - WE 6 / H 130	40	6	130	25	•	811-106001
213-11442	5864	BT 40 - WE 6 / H 160	40	6	160	25	•	811-106001
4253	4391	BT 40 - WE 6 / H 200	40	6	200	25	•	811-106001
213-11414	4910	BT 40 - WE 8 / H 50	40	8	50	28	•	811-106002
213-11435	5865	BT 40 - WE 8 / H 100	40	8	100	28	•	811-106002
8005	8022	BT 40 - WE 8 / H 130	40	8	130	28	•	811-106002
213-11443	5866	BT 40 - WE 8 / H 160	40	8	160	28	•	811-106002
4254	4396	BT 40 - WE 8 / H 200	40	8	200	28	•	811-106002
213-11415	4911	BT 40 - WE 10 / H 63	40	10	63	35	•	811-106004
213-11436	5867	BT 40 - WE 10 / H 100	40	10	100	35	•	811-106004
8006	8023	BT 40 - WE 10 / H 130	40	10	130	35	•	811-106004
213-11444	5868	BT 40 - WE 10 / H 160	40	10	160	35	•	811-106004
4255	4397	BT 40 - WE 10 / H 200	40	10	200	35	•	811-106004
213-11416	4912	BT 40 - WE 12 / H 63	40	12	63	42	•	811-106005
213-11437	5869	BT 40 - WE 12 / H 100	40	12	100	42	•	811-106005
8007	8024	BT 40 - WE 12 / H 130	40	12	130	42	•	811-106005
213-11445	5870	BT 40 - WE 12 / H 160	40	12	160	42	•	811-106005
4262	4401	BT 40 - WE 12 / H 200	40	12	200	42	•	811-106005
213-11417	4913	BT 40 - WE 14 / H 63	40	14	63	44	•	811-106005
213-11438	5871	BT 40 - WE 14 / H 100	40	14	100	44	•	811-106005
8008	8025	BT 40 - WE 14 / H 130	40	14	130	44	•	811-106005
4268	4432	BT 40 - WE 14 / H 160	40	14	160	44	•	811-106005
-	4433	BT 40 - WE 14 / H 200	40	14	200	44	•	811-106006
213-11418	4914	BT 40 - WE 16 / H 63	40	16	63	48	•	811-106006
213-11439	5872	BT 40 - WE 16 / H 100	40	16	100	48	•	811-106006
8009	8026	BT 40 - WE 16 / H 130	40	16	130	48	•	811-106006
213-11446	5873	BT 40 - WE 16 / H 160	40	16	160	48	•	811-106006
4270	4434	BT 40 - WE 16 / H 200	40	16	200	48	•	811-106006

follows >>

WELDON END MILL HOLDERS

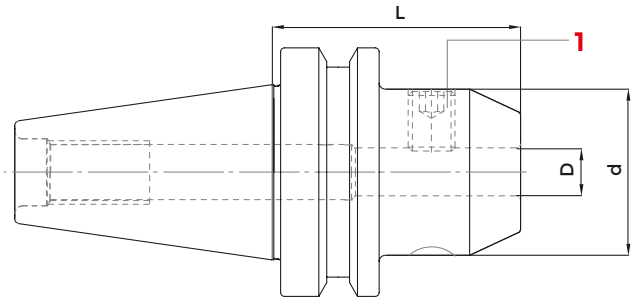

JIS-B 6339 MAS 403/BT SHAPE AD/B - DIN 1835 B

COD. (AD)	COD. (AD+B)	DESCRIPTION	ISO	D	L	d	G6.3 12000	1 SCREW
213-11419	4915	BT 40 - WE 18 / H 63	40	18	63	50	•	811-106006
213-11440	5874	BT 40 - WE 18 / H 100	40	18	100	50	•	811-106006
4272	-	BT 40 - WE 18 / H 200	40	18	200	50	•	811-106006
213-11420	4916	BT 40 - WE 20 / H 63	40	20	63	52	•	811-106007
213-11441	5875	BT 40 - WE 20 / H 100	40	20	100	52	•	811-106007
5067	4437	BT 40 - WE 20 / H 130	40	20	130	52	•	811-106007
213-11447	5876	BT 40 - WE 20 / H 160	40	20	160	52	•	811-106007
4274	4446	BT 40 - WE 20 / H 200	40	20	200	52	•	811-106007
213-11421	4917	BT 40 - WE 25 / H 90	40	25	90	65	•	811-106008
5069	4939	BT 40 - WE 25 / H 130	40	25	130	65	•	811-106008
213-11468	4448	BT 40 - WE 25 / H 160	40	25	160	65	•	811-106008
4358	4479	BT 40 - WE 25 / H 200	40	25	200	65	•	811-106008
213-11422	4918	BT 40 - WE 32 / H 100	40	32	100	72	•	811-106009
5071	4480	BT 40 - WE 32 / H 130	40	32	130	72	•	811-106009
213-11469	4481	BT 40 - WE 32 / H 160	40	32	160	72	•	811-106009
4359	4482	BT 40 - WE 32 / H 200	40	32	200	72	•	811-106009
213-11465	4919	BT 40 - WE 40 / H 105	40	40	105	80	•	811-106009
213-11423	4920	BT 50 - WE 6 / H 63	50	6	63	25	•	811-106001
213-11448	5877	BT 50 - WE 6 / H 100	50	6	100	25	•	811-106001
8011	8028	BT 50 - WE 6 / H 130	50	6	130	25	•	811-106001
5568	5878	BT 50 - WE 6 / H 160	50	6	160	25	•	811-106001
213-11484	4485	BT 50 - WE 6 / H 200	50	6	200	25	•	811-106001
213-11424	4921	BT 50 - WE 8 / H 63	50	8	63	28	•	811-106002
213-11449	5879	BT 50 - WE 8 / H 100	50	8	100	28	•	811-106002
8012	8029	BT 50 - WE 8 / H 130	50	8	130	28	•	811-106002
213-11458	5880	BT 50 - WE 8 / H 160	50	8	160	28	•	811-106002
213-11485	4497	BT 50 - WE 8 / H 200	50	8	200	28	•	811-106002
213-11425	4922	BT 50 - WE 10 / H 70	50	10	70	35	•	811-106004
213-11450	5907	BT 50 - WE 10 / H 100	50	10	100	35	•	811-106004
8013	8030	BT 50 - WE 10 / H 130	50	10	130	35	•	811-106004
213-11459	5908	BT 50 - WE 10 / H 160	50	10	160	35	•	811-106004
213-11486	4498	BT 50 - WE 10 / H 200	50	10	200	35	•	811-106004
213-11426	4923	BT 50 - WE 12 / H 80	50	12	80	42	•	811-106005
213-11451	5912	BT 50 - WE 12 / H 100	50	12	100	42	•	811-106005
8014	8031	BT 50 - WE 12 / H 130	50	12	130	42	•	811-106005
213-11460	5909	BT 50 - WE 12 / H 160	50	12	160	42	•	811-106005

follows >>

WELDON END MILL HOLDERS

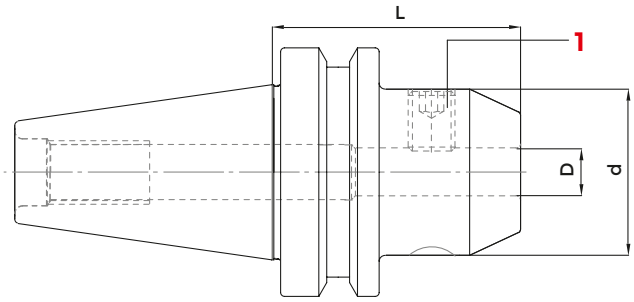

JIS-B 6339 MAS 403/BT SHAPE AD/B - DIN 1835 B

COD. (AD)	COD. (AD+B)	DESCRIPTION	ISO	D	L	d	G6.3 12000	1 SCREW
213-11487	4499	BT 50 - WE 12 / H 200	50	12	200	42	•	811-106005
213-11427	4924	BT 50 - WE 14 / H 80	50	14	80	44	•	811-106005
4371	4500	BT 50 - WE 14 / H 100	50	14	100	44	•	811-106005
8015	8032	BT 50 - WE 14 / H 130	50	14	130	44	•	811-106005
4375	-	BT 50 - WE 14 / H 160	50	14	160	44	•	811-106005
4376	-	BT 50 - WE 14 / H 200	50	14	200	44	•	811-106005
213-11428	4925	BT 50 - WE 16 / H 80	50	16	80	48	•	811-106006
213-11453	5913	BT 50 - WE 16 / H 100	50	16	100	48	•	811-106006
8016	8033	BT 50 - WE 16 / H 130	50	16	130	48	•	811-106006
213-11461	5910	BT 50 - WE 16 / H 160	50	16	160	48	•	811-106006
213-11489	4523	BT 50 - WE 16 / H 200	50	16	200	48	•	811-106006
213-11429	4926	BT 50 - WE 18 / H 80	50	18	80	50	•	811-106006
4381	4524	BT 50 - WE 18 / H 100	50	18	100	50	•	811-106006
8017	-	BT 50 - WE 18 / H 130	50	18	130	50	•	811-106006
4382	4525	BT 50 - WE 18 / H 160	50	18	160	50	•	811-106006
213-11430	4927	BT 50 - WE 20 / H 80	50	20	80	52	•	811-106007
213-11455	5914	BT 50 - WE 20 / H 100	50	20	100	52	•	811-106007
8018	8035	BT 50 - WE 20 / H 130	50	20	130	52	•	811-106007
213-11462	5911	BT 50 - WE 20 / H 160	50	20	160	52	•	811-106007
213-11491	4527	BT 50 - WE 20 / H 200	50	20	200	52	•	811-106007
213-11431	4928	BT 50 - WE 25 / H 100	50	25	100	65	•	811-106008
8019	8036	BT 50 - WE 25 / H 130	50	25	130	65	•	811-106008
213-11472	BT50H160WE25ADB	BT 50 - WE 25 / H 160	50	25	160	65	•	811-106008
213-11492	4528	BT 50 - WE 25 / H 200	50	25	200	65	•	811-106008
213-11432	4929	BT 50 - WE 32 / H 105	50	32	105	72	•	811-106009
8020	8037	BT 50 - WE 32 / H 130	50	32	130	72	•	811-106009
213-11473	5916	BT 50 - WE 32 / H 160	50	32	160	72	•	811-106009
213-11463	4529	BT 50 - WE 32 / H 200	50	32	200	72	•	811-106009
213-11433	4930	BT 50 - WE 40 / H 120	50	40	120	80	•	811-106009
5085	5917	BT 50 - WE 40 / H 160	50	40	160	80	•	811-106009
213-11594	4530	BT 50 - WE 40 / H 200	50	40	200	80	•	811-106009
263-11425	4552	BT 50 - WE 50 / H 125	50	50	125	100	•	4978

WELDON END MILL HOLDERS - HIGH SPEED LINE

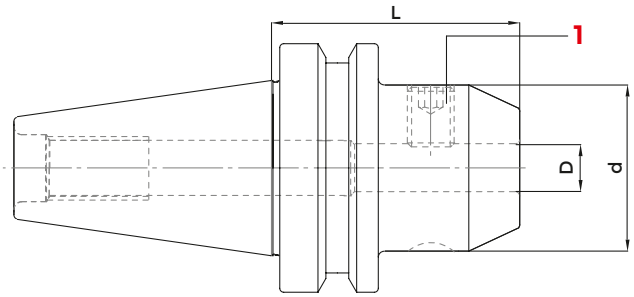

JIS-B 6339 MAS 403/BT A - DIN 1835 B — HIGH SPEED LINE

COD.	DESCRIPTION	ISO	D	L	d	G2.5 25000	1 SCREW
213-91401	BT40H50WE06	40	6	50	25	•	811-106001
213-91402	BT40H50WE08	40	8	50	28	•	811-106002
213-91403	BT40H63WE10	40	10	63	35	•	811-106004
213-91404	BT40H63WE12	40	12	63	42	•	811-106005
213-91406	BT40H63WE16	40	16	63	48	•	811-106006
213-91408	BT40H63WE20	40	20	63	52	•	811-106007
213-91409	BT40H90WE25	40	25	90	65	•	811-106008
213-91410	BT40H100WE32	40	32	100	72	•	811-106009

WELDON END MILL HOLDERS - LONG SERIES - HIGH SPEED LINE

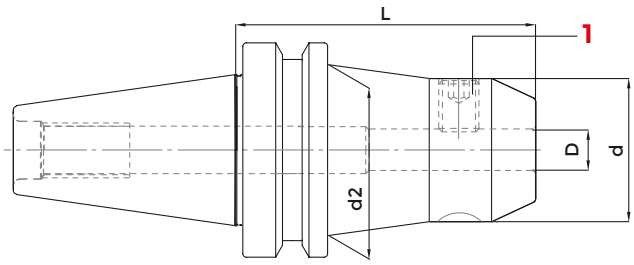

JIS-B 6339 MAS 403/BT A - DIN 1835 B — HIGH SPEED LINE

COD.	DESCRIPTION	ISO	D	L	d	d2	G2.5 25000	1 SCREW
213-91424	BT40H100WE06	40	6	100	25	35	•	811-106001
213-91425	BT40H100WE08	40	8	100	28	38	•	811-106002
213-91426	BT40H100WE10	40	10	100	35	40	•	811-106004
213-91427	BT40H100WE12	40	12	100	42	-	•	811-106005
213-91429	BT40H100WE16	40	16	100	48	-	•	811-106006
213-91431	BT40H100WE20	40	20	100	52	-	•	811-106007

WELDON END MILL HOLDERS - SHORT SERIES WITH COOLANT CHANNELS

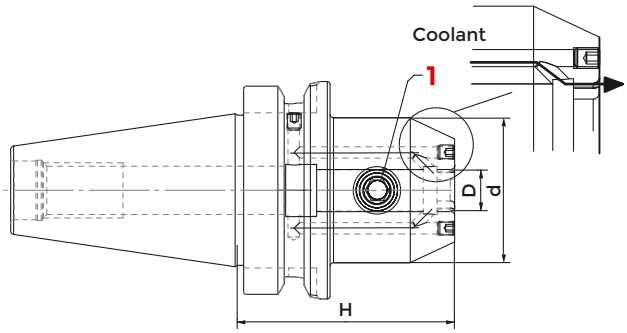

JIS-B 6339 MAS 403/BT SHAPE AD/B - DIN 1835 B

COD.	DESCRIPTION	ISO	D	H	d	G6.3 12000	1 SCREW
213-61423	BT 40 - WEC 6 / H 50	40	6	50	25	•	811-106001
213-61424	BT 40 - WEC 8 / H 50	40	8	50	28	•	811-106002
213-61425	BT 40 - WEC 10 / H 63	40	10	63	35	•	811-106004
213-61426	BT 40 - WEC 12 / H 63	40	12	63	42	•	811-106005
213-61427	BT 40 - WEC 14 / H 63	40	14	63	44	•	811-106005
213-61428	BT 40 - WEC 16 / H 63	40	16	63	48	•	811-106006
213-61429	BT 40 - WEC 18 / H 63	40	18	63	50	•	811-106006
213-61430	BT 40 - WEC 20 / H 63	40	20	63	52	•	811-106007
213-61431	BT 40 - WEC 25 / H 90	40	25	90	65	•	811-106008
213-61432	BT 40 - WEC 32 / H 100	40	32	100	72	•	811-106009
213-61433	BT 40 - WEC 40 / H 105	40	40	105	80	•	811-106009
213-61437	BT 50 - WEC 12 / H 80	50	12	80	42	•	811-106005
213-61439	BT 50 - WEC 16 / H 80	50	16	80	48	•	811-106006
213-61441	BT 50 - WEC 20 / H 80	50	20	80	52	•	811-106007
213-61442	BT 50 - WEC 25 / H 100	50	25	100	65	•	811-106008
213-61443	BT 50 - WEC 32 / H 105	50	32	105	72	•	811-106009
213-61444	BT 50 - WEC 40 / H 120	50	40	120	80	•	811-106009

WHISTLE NOTCH END MILL HOLDERS

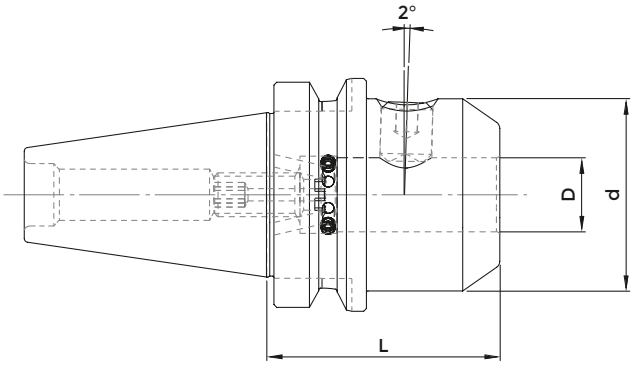

JIS-B 6339 MAS 403/BT SHAPE AD - DIN 1835 B

COD.	DESCRIPTION	ISO	D	L	d	G6.3 12000	1 SCREW
4666	BT 40 - WN 6 / H 50	40	6	50	25	•	811-106001
4667	BT 40 - WN 8 / H 50	40	8	50	28	•	811-106002
4668	BT 40 - WN 10 / H 63	40	10	63	35	•	811-106004
4669	BT 40 - WN 12 / H 63	40	12	63	42	•	811-106005
4670	BT 40 - WN 14 / H 63	40	14	63	44	•	811-106005
213-31417	BT 40 - WN 16 / H 63	40	16	63	48	•	811-106006
4672	BT 40 - WN 18 / H 63	40	18	63	50	•	811-106006
213-31419	BT 40 - WN 20 / H 63	40	20	63	52	•	811-106007
213-31420	BT 40 - WN 25 / H 90	40	25	90	65	•	811-106008
213-31421	BT 40 - WN 32 / H 100	40	32	100	72	•	811-106009
213-31422	BT 40 - WN 40 / H 105	40	40	105	80	•	811-106009

INDEXABLE DRILL HOLDERS

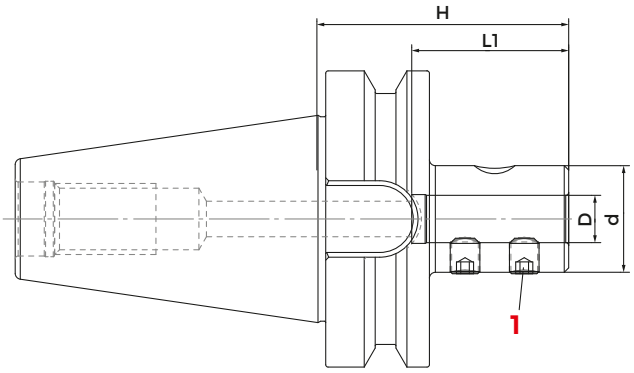

JIS-B 6339 MAS-403/BT SHAPE AD

COD.	DESCRIPTION	ISO	D	d	H	L1	G6.3 12000	1 SCREW
8574	BT 40 - D. 16 P	40	16	36	75	54	•	811-402003
217-90989	BT 40 - D. 20 P	40	20	40	75	54	•	811-402003
217-90990	BT 40 - D. 25 P	40	25	45	80	59	•	811-402005
217-90991	BT 40 - D. 32 P	40	32	52	85	63	•	811-402005
8721	BT 50 - D. 16 P	50	16	36	80	54	•	811-402003
217-90993	BT 50 - D. 20 P	50	20	40	80	54	•	811-402003
217-90994	BT 50 - D. 25 P	50	25	45	90	59	•	811-402005
217-90995	BT 50 - D. 32 P	50	32	52	90	63	•	811-402005
217-90996	BT 50 - D. 40 P	50	40	60	100	73	•	811-402007

FACE MILL HOLDERS - TENONS DRIVE

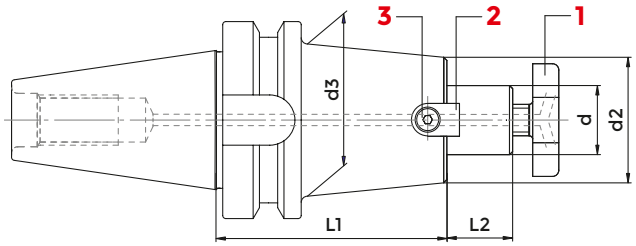

JIS-B 6339 MAS 403/BT SHAPE AD/B - ISO 3937

COD. (AD)	COD. (AD+B)	DESCRIPTION	ISO	d	L1	L2	d2	d3	G6,3 8000	1 CROSS SCREW	2 TENON	3 SCREW	WRENCH
216-71501	-	BT 30 - D. 16 FISSO / H 35	30	16	35	17	38	-	•	811-107003	814-202280	811-101004	816-130002
216-71502	-	BT 30 - D. 22 FISSO / H 40	30	22	40	19	48	-	•	811-107004	814-202250	811-101011	816-130003
216-71503	-	BT 30 - D. 27 FISSO / H 40	30	27	40	21	58	-	•	811-107005	814-202270	7414	816-130004
216-71507	216-71401	BT 40 - D. 16 FISSO / H 45	40	16	45	17	38	-	•	811-107003	814-202280	811-101004	816-130002
216-71522	216-71411	BT 40 - D. 16 FISSO / H 100	40	16	100	17	38	-	•	811-107003	814-202280	811-101004	816-130002
9420	216-71428	BT 40 - D. 16 FISSO / H 130	40	16	130	17	38	-	•	811-107003	814-202280	811-101004	816-130002
216-71523	216-71437	BT 40 - D. 16 FISSO / H 160	40	16	160	17	38	-	•	811-107003	814-202280	811-101004	816-130002
216-71508	216-71402	BT 40 - D. 22 FISSO / H 45	40	22	45	19	48	-	•	811-107004	814-202250	811-101011	816-130003
216-71526	216-71412	BT 40 - D. 22 FISSO / H 100	40	22	100	19	46	48	•	811-107004	814-202250	811-101011	816-130003
216-71530	-	BT 40 - D. 22 FISSO / H 100 FIS.63	40	22	100	19	50	59	•	811-107004	814-202250	811-101011	816-130003
9421	216-71429	BT 40 - D. 22 FISSO / H 130	40	22	130	19	46	48	•	811-107004	814-202250	811-101011	816-130003
216-71527	216-71438	BT 40 - D. 22 FISSO / H 160	40	22	160	19	46	48	•	811-107004	814-202250	811-101011	816-130003
216-71509	216-71403	BT 40 - D. 27 FISSO / H 45	40	27	45	21	58	-	•	811-107005	814-202270	7414	816-130004
216-71599	216-71413	BT 40 - D. 27 FISSO / H 100	40	27	100	21	48	-	•	811-107005	814-202160	811-101017	816-130004
9422	216-71430	BT 40 - D. 27 FISSO / H 130	40	27	130	21	55	-	•	811-107005	814-202270	7414	816-130004
5591	216-71452	BT 40 - D. 27 FISSO / H 160	40	27	160	21	55	-	•	811-107005	814-202270	7414	816-130004
216-71510	216-71404	BT 40 - D. 32 FISSO / H 50	40	32	50	24	78	-	•	811-107006	814-202630	811-101029	816-130005
266-71501	5888	BT 40 - D. 32 FISSO / H 100	40	32	100	24	58	-	•	811-107006	814-202170	811-101027	816-130005
8419	216-71453	BT 40 - D. 32 FISSO / H 160	40	32	160	24	66	-	•	811-107006	814-202290	0207	816-130005
216-71511	216-71405	BT 40 - D. 40 FISSO / H 55	40	40	55	27	88	-	•	811-107006	814-202290	0207	816-130005
266-71502	8445	BT 40 - D. 40 FISSO / H 100	40	40	100	27	70	-	•	811-107007	814-202710	811-101029	816-130006
-	216-71451	BT 40 - D. 40 FISSO / H 130	40	40	130	27	88	60	•	811-107007	814-202180	0207	816-130006
8421	216-71454	BT 40 - D. 40 FISSO / H 160	40	40	160	27	88	-	•	811-107007	814-202710	811-101029	816-130006
216-71517	216-71406	BT 50 - D. 16 FISSO / H 60	50	16	60	17	38	-	•	811-107003	814-202280	811-101004	816-130002
216-71589	216-71415	BT 50 - D. 16 FISSO / H 100	50	16	100	17	38	-	•	811-107003	814-202280	811-101004	816-130002
9425	216-71432	BT 50 - D. 16 FISSO / H 130	50	16	130	17	38	-	•	811-107003	814-202280	811-101004	816-130002
216-71591	216-71439	BT 50 - D. 16 FISSO / H 160	50	16	160	17	38	-	•	811-107003	814-202280	811-101004	816-130002
-	216-71446	BT 50 - D. 16 FISSO / H 200	50	16	200	17	38	-	•	811-107003	814-202280	811-101004	816-130002
216-71518	216-71407	BT 50 - D. 22 FISSO / H 60	50	22	60	19	48	-	•	811-107004	814-202250	811-101011	816-130003
216-71534	216-71416	BT 50 - D. 22 FISSO / H 100	50	22	100	19	46	49	•	811-107004	814-202250	811-101011	816-130003
9492	-	BT 50 - D. 22 FISSO / H 100 FIS.63	50	22	100	19	50	60	•	811-107004	814-202250	811-101011	816-130003

follows >>

FACE MILL HOLDERS - TENONS DRIVE

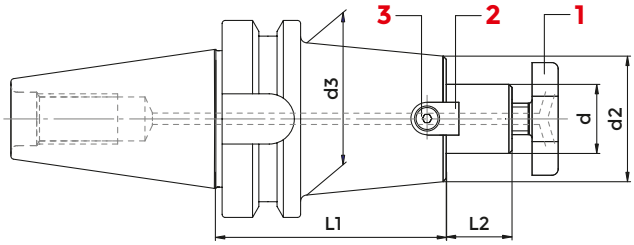

JIS-B 6339 MAS 403/BT SHAPE AD/B - ISO 3937

COD. (AD)	COD. (AD+B)	DESCRIPTION	ISO	d	L1	L2	d2	d3	G6,3 8000	1 CROSS SCREW	2 TENON	3 SCREW	WRENCH
9426	216-71433	BT 50 - D. 22 FISSO / H 130	50	22	130	19	46	56	•	811-107004	814-202250	811-101011	816-130003
216-71535	216-71440	BT 50 - D. 22 FISSO / H 160	50	22	160	19	46	49	•	811-107004	814-202250	811-101011	816-130003
216-71540	-	BT 50 - D. 22 FISSO / H 160 FIS.63	50	22	160	19	50	60	•	811-107004	814-202250	811-101011	816-130003
-	216-71459	BT 50 - D. 22 FISSO / H 200 FIS.63	50	22	200	19	50	60	•	811-107004	814-202250	811-101011	816-130003
216-71519	216-71408	BT 50 - D. 27 FISSO / H 60	50	27	60	21	58	-	•	811-107005	814-202270	7414	816-130004
216-71544	216-71417	BT 50 - D. 27 FISSO / H 100	50	27	100	21	55	78	•	811-107005	814-202270	7414	816-130004
9427	216-71434	BT 50 - D. 27 FISSO / H 130	50	27	130	21	55	78	•	811-107005	814-202270	7414	816-130004
216-71545	216-71441	BT 50 - D. 27 FISSO / H 160	50	27	160	21	55	78	•	811-107005	814-202270	7414	816-130004
216-71520	216-71409	BT 50 - D. 32 FISSO / H 60	50	32	60	24	78	-	•	811-107006	814-202630	811-101029	816-130005
216-71590	216-71418	BT 50 - D. 32 FISSO / H 100	50	32	100	24	66	78	•	811-107006	814-202290	811-101029	816-130005
9428	216-71435	BT 50 - D. 32 FISSO / H 130	50	32	130	24	66	78	•	811-107006	814-202290	811-101029	816-130005
216-71592	216-71442	BT 50 - D. 32 FISSO / H 160	50	32	160	24	66	78	•	811-107006	814-202290	811-101029	816-130005
216-71521	216-71410	BT 50 - D. 40 FISSO / H 60	50	40	60	27	88	-	•	811-107007	814-202710	811-101029	816-130006
266-71503	216-71419	BT 50 - D. 40 FISSO / H 100	50	40	100	27	70	-	•	811-107007	814-202180	0207	816-130006
-	216-71436	BT 50 - D. 40 FISSO / H 130	50	40	130	27	70	-	•	811-107007	814-202180	0207	816-130006
8434	216-71443	BT 50 - D. 40 FISSO / H 160	50	40	160	27	70	78	•	811-107007	814-202180	0207	816-130006

ACCESSORIES

p. 693

p. 695

p. 694

COMBI-SHELL MILL HOLDERS

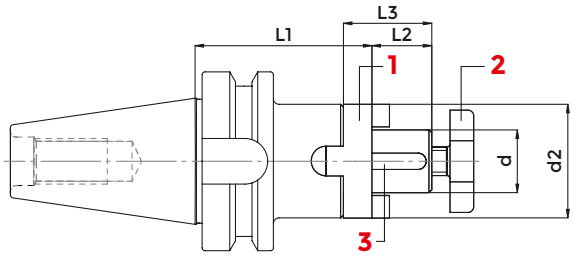

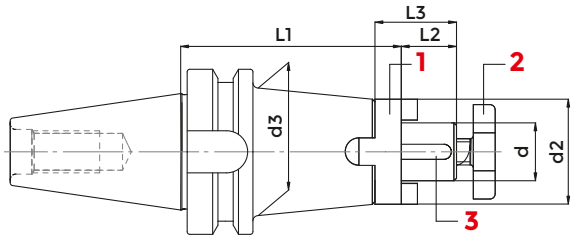

JIS-B 6339 MAS 403/BT SHAPE A - DIN 6358

COD.	DESCRIPTION	ISO	d	L1	L2	L3	d2	d3	G6,3 8000	1 COUPLING RING	2 CROSS SCREW	3 KEY	WRENCH
216-11527	BT 30 - D.16 C / H 50	30	16	50	17	27	32	-	•	814-30001	811-107003	814-201010	816-130002
216-11536	BT 30 - D.16 C / H 100	30	16	100	17	27	32	-	•	814-30001	811-107003	814-201010	816-130002
216-11528	BT 30 - D.22 C / H 50	30	22	50	19	31	40	-	•	814-30002	811-107004	814-201020	816-130003
216-11537	BT 30 - D.22 C / H 100	30	22	100	19	31	40	-	•	814-30002	811-107004	0016	816-130003
3943	BT 30 - D.27 C / H 55	30	27	55	21	33	48	-	•	814-30003	811-107005	814-201030	816-130004
216-11501	BT 40 - D.16 C / H 55	40	16	55	17	27	32	-	•	814-30001	811-107003	814-201010	816-130002
216-11517	BT 40 - D.16 C / H 100	40	16	100	17	27	32	44	•	814-30001	811-107003	814-201010	816-130002
8483	BT 40 - D.16 C / H 160	40	16	160	17	27	32	44	•	814-30001	811-107003	814-201010	816-130002
216-11502	BT 40 - D.22 C / H 55	40	22	55	19	31	40	-	•	814-30002	811-107004	814-201020	816-130003
216-11518	BT 40 - D.22 C / H 100	40	22	100	19	31	40	-	•	814-30002	811-107004	814-201020	816-130003
8484	BT 40 - D.22 C / H 160	40	22	160	19	31	40	47	•	814-30002	811-107004	814-201020	816-130003
216-11503	BT 40 - D.27 C / H 55	40	27	55	21	33	48	-	•	814-30003	811-107005	814-201030	816-130004
216-11519	BT 40 - D.27 C / H 100	40	27	100	21	33	48	-	•	814-30003	811-107005	814-201030	816-130004
8485	BT 40 - D.27 C / H 160	40	27	160	21	33	48	55	•	814-30003	811-107005	814-201030	816-130004
216-11504	BT 40 - D.32 C / H 60	40	32	60	24	38	58	-	•	814-30004	811-107006	814-201040	816-130005
216-11520	BT 40 - D.32 C / H 100	40	32	100	24	38	58	-	•	814-30004	811-107006	814-201040	816-130005
8486	BT 40 - D.32 C / H 160	40	32	160	24	38	58	-	•	814-30004	811-107006	814-201040	816-130005
216-11505	BT 40 - D.40 C / H 60	40	40	60	27	41	70	-	•	814-30005	811-107007	814-201050	816-130006
216-11521	BT 40 - D.40 C / H 100	40	40	100	27	41	70	-	•	814-30005	811-107007	814-201050	816-130006
216-11507	BT 50 - D.16 C / H 70	50	16	70	17	27	32	-	•	814-30001	811-107003	814-201010	816-130002
4117	BT 50 - D.16 C / H 100	50	16	100	17	27	32	44	•	814-30001	811-107003	814-201010	816-130002
216-11508	BT 50 - D.22 C / H 70	50	22	70	19	31	40	-	•	814-30002	811-107004	814-201020	816-130003
216-11523	BT 50 - D.22 C / H 100	50	22	100	19	31	40	50	•	814-30002	811-107004	814-201020	816-130003
216-11509	BT 50 - D.27 C / H 70	50	27	70	21	33	48	-	•	814-30003	811-107005	814-201030	816-130004
216-11524	BT 50 - D.27 C / H 100	50	27	100	21	33	48	60	•	814-30003	811-107005	814-201030	816-130004
216-11510	BT 50 - D.32 C / H 70	50	32	70	24	38	58	-	•	814-30004	811-107006	814-201040	816-130005
216-11525	BT 50 - D.32 C / H 100	50	32	100	24	38	58	-	•	814-30004	811-107006	814-201040	816-130005
3816	BT 50 - D.40 C / H 70	50	40	70	27	41	70	-	•	814-30005	811-107007	814-201050	816-130006
4121	BT 50 - D.40 C / H 100	50	40	100	27	41	70	-	•	814-30005	811-107007	814-201050	816-130006

ACCESSORIES

p. 694

p. 693

p. 694

MILL HOLDERS WITH FEATHER KEY

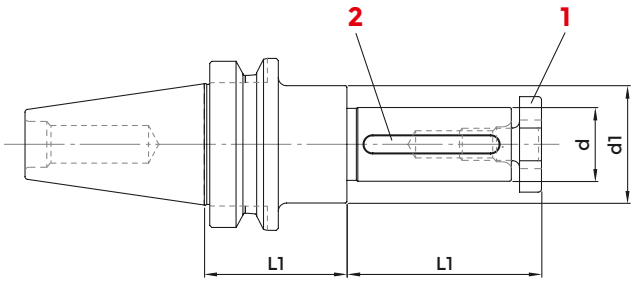

JIS-B 6339 MAS 403/BT SHAPE A - DIN 6358

COD.	DESCRIPTION	ISO	d	L1	L2	d1	G6.3 8000	1 CROSS SCREW	2 KEY	WRENCH
8503	BT 40 - D. 16 CHT	40	16	52	30	28	•	811-107003	0147	816-130002
8504	BT 40 - D. 22 CHT	40	22	52	40	36	•	811-107004	0148	816-130003
8505	BT 40 - D. 27 CHT	40	27	52	60	43	•	811-107005	0149	816-130004
8506	BT 40 - D. 32 CHT	40	32	52	60	48	•	811-107006	0150	816-130005
8507	BT 40 - D. 40 CHT	40	40	52	60	56	•	811-107007	0151	816-130006

ACCESSORIES

p. 693

p. 694

FACE MILL HOLDER FOR FACE MILLING CUTTERS

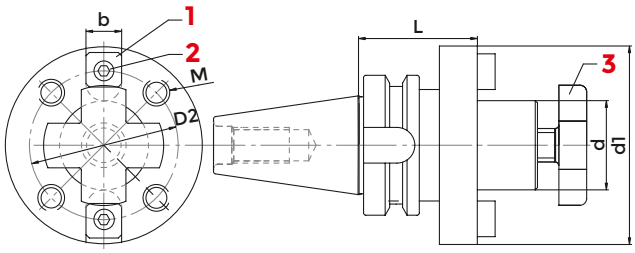

JIS-B 6339 MAS 403/BT A - DIN 6357

COD.	DESCRIPTION	ISO	d	L	d1	D2	M	b	G6,3 8000	1 SCREW	2 TENON	3 KEY
4186	BT 40 - D. 40 FM	40	40	60	89	66,7	M 12	15,9	•	0207	814-202080	811-107007
216-21502	BT 50 - D. 40 FM	50	40	70	89	66,7	M 12	15,9	•	0207	814-202080	811-107007
216-21503	BT 50 - D. 60 FM	50	60	80	129	101,6	M16	25,4	•	811-101064	814-202120	-

ACCESSORIES

p. 695

p. 693

END MILL HOLDERS FOR MILLING CUTTERS WITH THREADED SHANKS

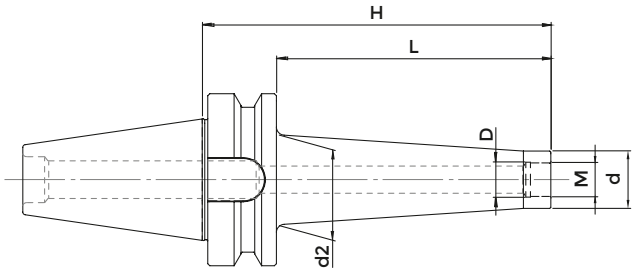

JIS-B 6339 MAS 403/BT SHAPE A/D - DIN 6358

COD.	DESCRIPTION	ISO	M	D	d	d2	H	L	G6.3 12000
217-81420	BT 40 - M 8 / H 55	40	M 8	8,5	13	15	55	28	•
7828	BT 40 - M 8 / H 77	40	M 8	8,5	13	23	77	50	•
217-81402	BT 40 - M 8 / H 102	40	M 8	8,5	13	23	102	75	•
7830	BT 40 - M 8 / H 127	40	M 8	8,5	13	25	127	100	•
217-81421	BT 40 - M 10 / H 55	40	M 10	10,5	18	20	55	28	•
217-81404	BT 40 - M 10 / H 77	40	M 10	10,5	18	23	77	50	•
7833	BT 40 - M 10 / H 102	40	M 10	10,5	18	28	102	75	•
217-81406	BT 40 - M 10 / H 127	40	M 10	10,5	18	32	127	100	•
217-81422	BT 40 - M 12 / H 55	40	M 12	12,5	21	24	55	28	•
217-81407	BT 40 - M 12 / H 77	40	M 12	12,5	21	24	77	50	•
217-81408	BT 40 - M 12 / H 102	40	M 12	12,5	21	31	102	75	•
217-81409	BT 40 - M 12 / H 127	40	M 12	12,5	21	33	127	100	•
217-81423	BT 40 - M 16 / H 55	40	M 16	17,0	29	32	55	28	•
217-81410	BT 40 - M 16 / H 77	40	M 16	17,0	29	34	77	50	•
217-81411	BT 40 - M 16 / H 102	40	M 16	17,0	29	34	102	75	•
217-81412	BT 40 - M 16 / H 127	40	M 16	17,0	29	36	127	100	•
217-81413	BT 40 - M 16 / H 152	40	M 16	17,0	29	40	152	125	•
217-81414	BT 50 - M 12 / H 88	50	M 12	12,5	21	24	88	50	•
7845	BT 50 - M 12 / H 138	50	M 12	12,5	21	33	138	100	•
7846	BT 50 - M 12 / H 188	50	M 12	12,5	21	40	188	150	•
8719	BT 50 - M 12 / H 254	50	M 12	12,5	21	42	254	216	•
217-81417	BT 50 - M 16 / H 88	50	M 16	17,0	29	34	88	50	•
217-81418	BT 50 - M 16 / H 138	50	M 16	17,0	29	36	138	100	•
217-81419	BT 50 - M 16 / H 188	50	M 16	17,0	29	42,5	188	150	•
8720	BT 50 - M 16 / H 254	50	M 16	17,0	29	44	254	216	•

INDEXABLE MORSE TAPER DRILL HOLDERS

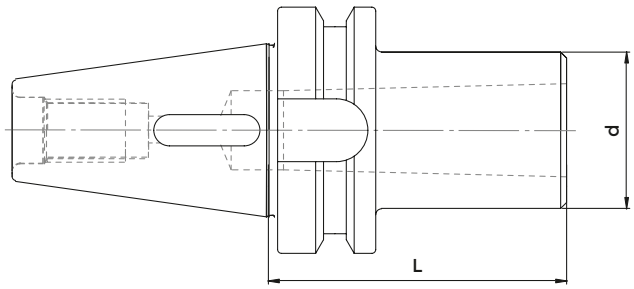

JIS-B 6339 MAS 403/BT SHAPE A/D - DIN 228-2

COD.	DESCRIPTION	ISO	MORSE	d	L	G6.3 8000
8346	BT 30 - CM 1 PUNTE	30	1	25	50	•
3796	BT 30 - CM 2 PUNTE	30	2	32	60	•
3883	BT 30 - CM 3 PUNTE	30	3	40	80	•
212-41501	BT 40 - CM 1 PUNTE	40	1	25	50	•
212-41502	BT 40 - CM 2 PUNTE	40	2	32	60	•
212-41503	BT 40 - CM 3 PUNTE	40	3	40	75	•
212-41504	BT 40 - CM 4 PUNTE	40	4	48	95	•
212-41519	BT 50 - CM 1 PUNTE	50	1	25	45	•
212-41505	BT 50 - CM 2 PUNTE	50	2	32	60	•
212-41506	BT 50 - CM 3 PUNTE	50	3	40	65	•
212-41507	BT 50 - CM 4 PUNTE	50	4	48	95	•
212-41508	BT 50 - CM 5 PUNTE	50	5	63	105	•

END MILL HOLDERS FOR MORSE TAPER CUTTERS

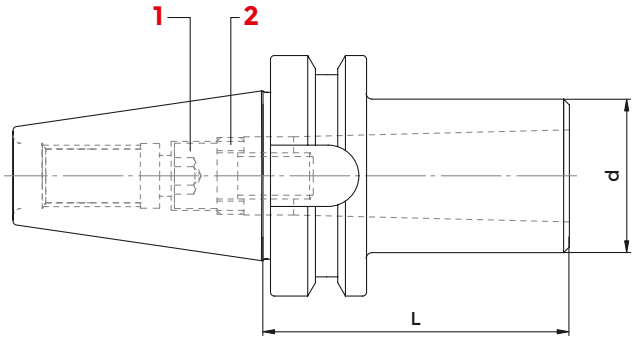

JIS-B 6339 MAS 403/BT SHAPE A - DIN 228-2

COD.	DESCRIPTION	ISO	MORSE	d	L	G6.3 8000	1 SCREW	2 LEFT NUT	WRENCH
3884	BT 30 - CM 3 FRESE	30	3	40	80	•	7402	811-302032	816-20206002
212-21502	BT 40 - CM 2 FRESE	40	2	32	50	•	811-111007	811-302031	816-20205002
212-21503	BT 40 - CM 3 FRESE	40	3	40	75	•	7403	811-302032	816-20206002
212-21504	BT 40 - CM 4 FRESE	40	4	48	95	•	7404	811-302036	816-20207002
3801	BT 50 - CM 2 FRESE	50	2	32	50	•	811-111007	811-302031	816-20205002
212-21506	BT 50 - CM 3 FRESE	50	3	40	65	•	7403	811-302032	816-20206002
212-21507	BT 50 - CM 4 FRESE	50	4	48	95	•	7407	811-302036	816-20207002
3891	BT 50 - CM 5 FRESE	50	5	63	120	•	7408	811-302034	816-20208002

COMBI MORSE TAPER HOLDERS FOR DRILLS AND MILLING CUTTERS

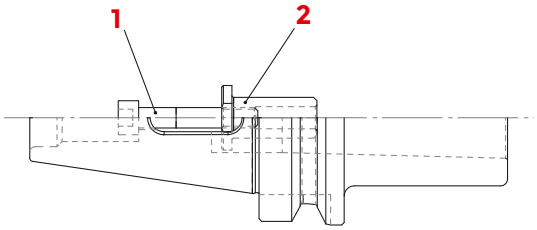

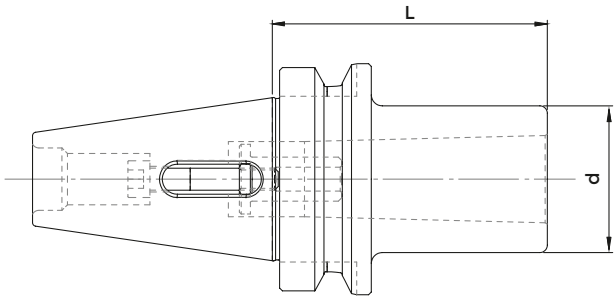

JIS-B 6339 MAS 403/BT SHAPE A - DIN 228-2

COD.	DESCRIPTION	ISO	MORSE	d	L	G6.3 8000	1 SCREW	2 REDUCER
212-61518	BT 40 - CM 1 P+ F	40	1	25	50	•	7400	-
212-61519	BT 40 - CM 2 P+ F	40	2	32	60	•	7401	-
212-61520	BT 40 - CM 3 P+ F	40	3	40	75	•	7400	811-302006
3790	BT 50 - CM 1 P+ F	50	1	25	45	•	7400	-
212-61523	BT 50 - CM 2 P+ F	50	2	32	60	•	7405	-
212-61524	BT 50 - CM 3 P+ F	50	3	40	65	•	811-101070	-
212-61525	BT 50 - CM 4 P+ F	50	4	48	95	•	7409	-

COMBI MORSE TAPER HOLDERS FOR DRILLS AND MILLING CUTTERS

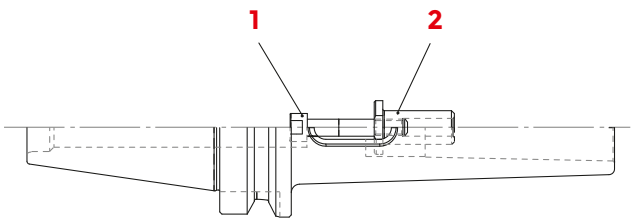

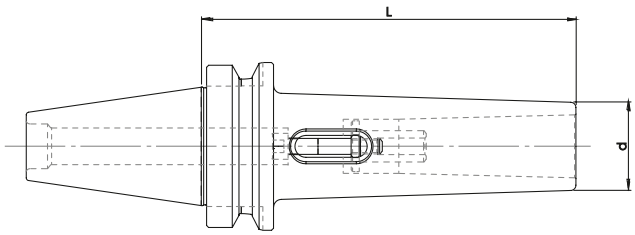

JIS-B 6339 MAS 403/BT SHAPE A - DIN 228-2

COD. DRILLS	COD.DRILLS + MILLING CUTTERS	DESCRIPTION	ISO	MORSE	d	L	G6,3 8000	1 SCREW	2 REDUCER
8348	4258	BT 40 - CM 1	40	1	18	115	•	7400	-
8350	212-61502	BT 40 - CM 2	40	2	25	120	•	7401	-
8351	212-61503	BT 40 - CM 3	40	3	33	140	•	7400	811-302006
4261	-	BT 40 - CM 4	40	4	40	165	•	-	-
8353	212-61505	BT 50 - CM 1	50	1	18	120	•	7400	-
8355	212-61506	BT 50 - CM 2	50	2	25	140	•	7405	-
8357	212-61507	BT 50 - CM 3	50	3	33	150	•	811-101070	-
8358	212-61508	BT 50 - CM 4	50	4	40	180	•	7409	-
8359	-	BT 50 - CM 5	50	5	55	220	•	-	-

ADAPTER FROM BT TO NT/SK/BT

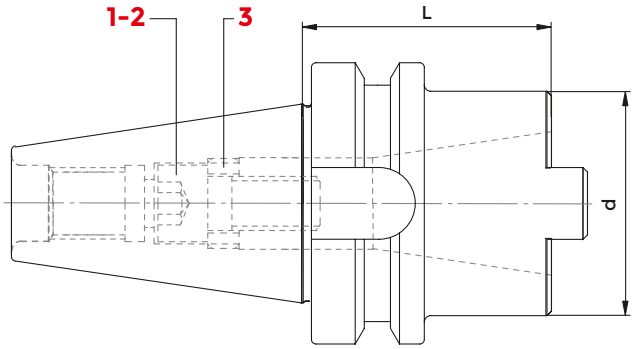

JIS-B 6339 MAS 403/BT SHAPE A - MAS403BT

COD.	DESCRIPTION	ISO	d	L	G6,3 8000	1 SCREW DIN 2080	2 SCREW BT DIN 69871	3 NUT	WRENCH
212-11504	BT 40 - ISO 30 / TC 30 / BT 30	30	50	70	•	*811-101065	*0177	*811-302032	816-20206002
212-11508	BT 40 - ISO 40 / TC 40 / BT 40	40	68	100	•	*811-401147	*811-401150	*811-302036	816-20207002
212-11507	BT 50 - ISO 40 / TC 40 / BT 40	40	78	70	•	*811-401147	*811-401150	*811-302036	816-20207002
212-11509	BT 50 - ISO 50 / TC 50 / BT 50	50	100	120	•	*811-401151	*811-401152	*811-302047	816-202090

*included in delivery

ADAPTER FROM BT TO DIN69893-1 (HSK A+C)

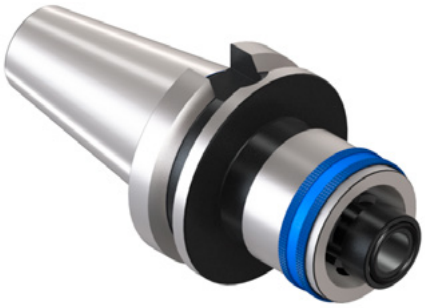

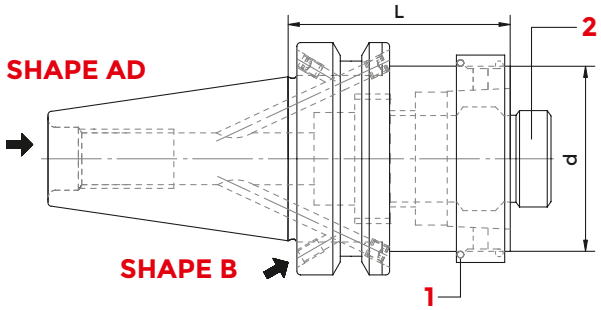

JIS-B 6339 MAS 403/BT SHAPE AD/B

COD.	DESCRIPTION	ISO	d	L	G6,3 8000	1 LOCKING RING	2 CLAMPING UNIT
212-91402	BT 40 - HSK 63 A+C	40	63	80	•	L0701460	HN63C
212-91404	BT 50 - HSK 63 A+C	50	63	70	•	L0701460	HN63C

ADAPTER FROM BT TO ISO26623-1 (POLYGONAL)

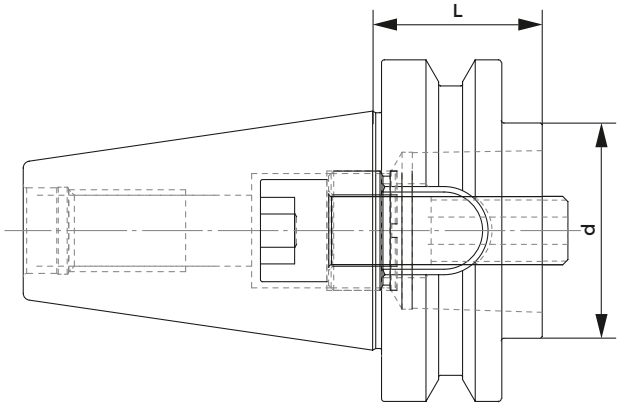

JIS-B 6339 MAS 403/BT SHAPE AD/B - MAS403BT

COD.	DESCRIPTION	ISO	d	L	G6,3 8000
BT40H75C63ADB	BT 40 - C 63 / H 75	40	63	75	•
BT50H70C40ADB	BT 50 - C 40/ H 70	50	40	70	•
BT50H90C63ADB	BT 50 - C 63 / H 90	50	63	90	•

ER COLLET CHUCK WITH MINI NUT

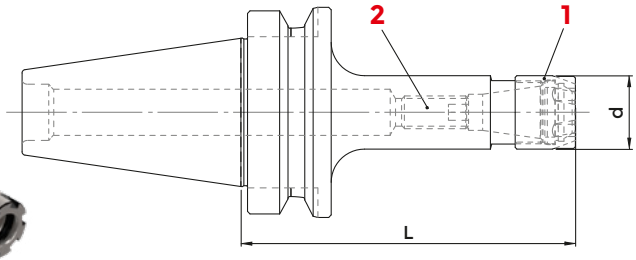

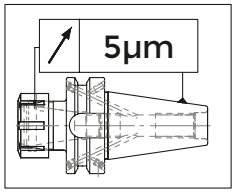

H= 0 > 100 mm - 5 µm
H= 100 > 200 mm - 10 µm

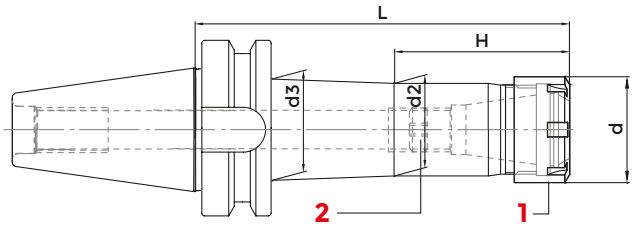

JIS-B 6339 MAS 403/BT AD/B - DIN 6358

COD. (AD)	COD. (AD+B)	DESCRIPTION	ISO	ER	d	d2	d3	L	H	G6,3 12000	G6,3 15000	1 NUT	2 SCREW	WRENCH	COLLET
214-91448	-	BT 30 - ER 11 GM /H 70 SLIM LINE	30	ER 11 1÷8	16	16	19	70	20	-	•	812-203012	811-102114	816-203008	ER11
9655	-	BT 30 - ER 11 GM /H 100 SLIM LINE	30	ER 11 1÷8	16	14	20	100	20	-	•	812-203012	811-102114	816-203008	ER11
214-31596	-	BT 30 - ER 16 GM /H 80 SLIM LINE	30	ER 16 1÷12	22	22	-	80	-	-	•	812-203013	811-102114	816-203009	ER16
3454	-	BT 30 - ER 16 GM /H 120 SLIM LINE	30	ER 16 1÷12	22	22	-	120	-	-	•	812-203013	811-102114	816-203009	ER16
214-91433	4855	BT 40 - ER 11 GM /H 70 SLIM LINE	40	ER 11 1÷8	16	14	20	70	20	-	•	812-203012	811-102114	816-203008	ER11
214-91434	4856	BT 40 - ER 11 GM /H 100 SLIM LINE	40	ER 11 1÷8	16	14	20	100	40	-	•	812-203012	811-102114	816-203008	ER11
3272	4857	BT 40 - ER 11 GM /H 130 SLIM LINE	40	ER 11 1÷8	16	16	-	130	-	-	•	812-203012	811-102114	816-203008	ER11
214-91435	4858	BT 40 - ER 11 GM /H 160 SLIM LINE	40	ER 11 1÷8	16	14	27	160	50	-	•	812-203012	811-102114	816-203008	ER11
214-91436	4859	BT 40 - ER 16 GM /H 70 SLIM LINE	40	ER 16 1÷12	22	22	25	70	27	-	•	812-203013	811-102038	816-203009	ER16
214-91437	4860	BT 40 - ER 16 GM /H 100 SLIM LINE	40	ER 16 1÷12	22	22	26	100	47	-	•	812-203013	811-102038	816-203009	ER16
3457	4861	BT 40 - ER 16 GM /H 130 SLIM LINE	40	ER 16 1÷12	22	22	-	130	-	-	•	812-203013	811-102038	816-203009	ER16
214-91438	4862	BT 40 - ER 16 GM /H 160 SLIM LINE	40	ER 16 1÷12	22	22	26	160	97	-	•	812-203013	811-102038	816-203009	ER16
4781	4812	BT 40 - ER 16 GM /H 200 SLIM LINE	40	ER 16 1÷12	22	22	-	200	-	-	•	812-203013	811-102038	816-203009	ER16
214-91450	4501	BT 40 - ER 20 GM /H 70 SLIM LINE	40	ER 20 1÷15	28	27	-	70	-	-	•	812-203014	4973	816-203010	ER20
214-91451	4863	BT 40 - ER 20 GM /H 100 SLIM LINE	40	ER 20 1÷15	28	27	30	100	48	-	•	812-203014	4973	816-203010	ER20
3458	4864	BT 40 - ER 20 GM /H 130 SLIM LINE	40	ER 20 1÷15	28	27	-	130	-	-	•	812-203014	4973	816-203010	ER20
214-91452	4865	BT 40 - ER 20 GM /H 160 SLIM LINE	40	ER 20 1÷15	28	27	31	160	98	-	•	812-203014	4973	816-203010	ER20
4782	4813	BT 40 - ER 20 GM /H 200 SLIM LINE	40	ER 20 1÷15	28	27	-	200	-	-	•	812-203014	4973	816-203010	ER20
214-91439	4656	BT 40 - ER 25 GM /H 70 SLIM LINE	40	ER 25 1÷20	35	33	-	70	-	-	•	812-203015	0190	816-203011	ER25
214-91440	4866	BT 40 - ER 25 GM /H 100 SLIM LINE	40	ER 25 1÷20	35	33	-	100	-	-	•	812-203015	0190	816-203011	ER25
4690	4867	BT 40 - ER 25 GM /H 130 SLIM LINE	40	ER 25 1÷20	35	33	-	130	-	-	•	812-203015	0190	816-203011	ER25
214-91441	4868	BT 40 - ER 25 GM /H 160 SLIM LINE	40	ER 25 1÷20	35	33	33	160	103	-	•	812-203015	0190	816-203011	ER25
3460	4814	BT 40 - ER 25 GM /H 200 SLIM LINE	40	ER 25 1÷20	35	33	-	200	-	-	•	812-203015	0190	816-203011	ER25
214-91443	-	BT 50 - ER 16 GM /H 100 SLIM LINE	50	ER 16 1÷12	22	22	26	100	47	•	-	812-203013	811-102038	816-203009	ER16
3463	4869	BT 50 - ER 16 GM /H 130 SLIM LINE	50	ER 16 1÷12	22	22	-	130	-	•	-	812-203013	811-102038	816-203009	ER16

follows >>

ER COLLET CHUCK WITH MINI NUT

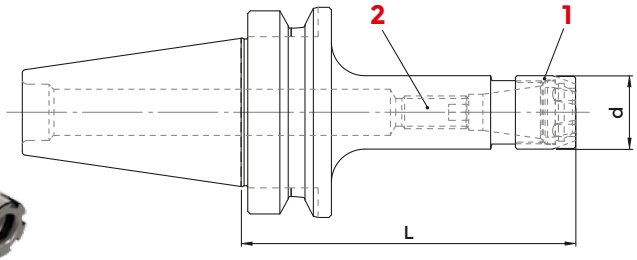

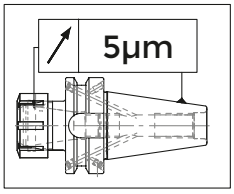

H= 0 > 100 mm - 5 µm
H= 100 > 200 mm - 10 µm

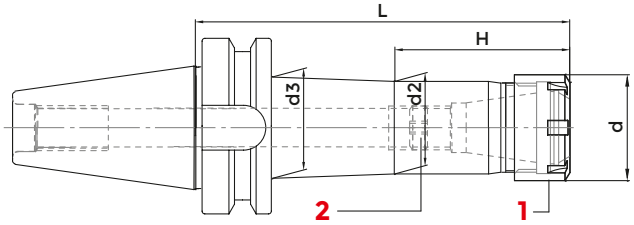

JIS-B 6339 MAS 403/BT AD/B - DIN 6358

COD. (AD)	COD. (AD+B)	DESCRIPTION	ISO	ER	d	d2	d3	L	H	G6,3 12000	G6,3 15000	1 NUT	2 SCREW	WRENCH	COLLET
214-91444	4833	BT 50 - ER 16 GM /H 160 SLIM LINE	50	ER 16 1÷12	22	22	28	160	97	•	-	812-203013	811-102038	816-203009	ER16
3495	4834	BT 50 - ER 16 GM /H 200 SLIM LINE	50	ER 16 1÷12	22	22	-	200	-	•	-	812-203013	811-102038	816-203009	ER16
3464	4870	BT 50 - ER 20 GM /H 130 SLIM LINE	50	ER 20 1÷15	28	27	-	130	-	•	-	812-203014	4973	816-203010	ER20
214-91455	4657	BT 50 - ER 20 GM /H 160 SLIM LINE	50	ER 20 1÷15	28	27	-	160	-	•	-	812-203014	4973	816-203010	ER20
3048	4658	BT 50 - ER 20 GM /H 200 SLIM LINE	50	ER 20 1÷15	28	27	-	200	-	•	-	812-203014	4973	816-203010	ER20
3051	4659	BT 50 - ER 25 GM /H 130 SLIM LINE	50	ER 25 1÷20	35	34	-	130	-	•	-	812-203015	0190	816-203011	ER25
214-91447	4871	BT 50 - ER 25 GM /H 160 SLIM LINE	50	ER 25 1÷20	35	34	40	160	108	•	-	812-203015	0190	816-203011	ER25
3061	4660	BT 50 - ER 25 GM /H 200 SLIM LINE	50	ER 25 1÷20	35	34	-	200	-	•	-	812-203015	0190	816-203011	ER25

ACCESSORIES

p. 648

p. 631

p. 652

ER COLLET CHUCK WITH HEXAGONAL NUT

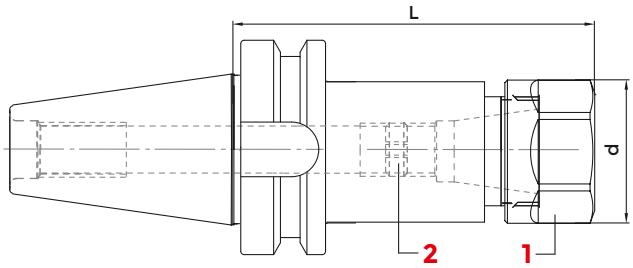

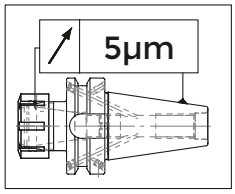

H= 0 > 100 mm - 5 µm
H= 100 > 200 mm - 10 µm

JIS-B 6339 MAS 403/BT A - DIN 6358

COD. (AD)	COD. (AD+B)	DESCRIPTION	ISO	ER	d	L	G6,3 15000	1 NUT	2 SCREW	WRENCH	COLLET
214-31511EXA	-	BT 30 - ER 16 GE / H 60	30	ER 16 1÷12	28	60	•	812-203009	811-102030	816-203012	ER16
214-31520EXA	-	BT 30 - ER 16 GE / H 100	30	ER 16 1÷12	28	100	•	812-203009	811-102030	816-203012	ER16
8086	-	BT 30 - ER 20 GE / H 60	30	ER 20 1÷15	34	60	•	812-203010	811-102030	816-203013	ER20
8087	-	BT 30 - ER 20 GE / H 100	30	ER 20 1÷15	34	100	•	812-203010	811-102030	816-203013	ER20
3447	4843	BT 40 - ER 11 GE / H 70	40	ER 11 1÷ 8	19	70	•	812-203008	811-102114	2905	ER11
3448	4844	BT 40 - ER 11 GE / H 100	40	ER 11 1÷ 8	19	100	•	812-203008	811-102114	2905	ER11
3449	4845	BT 40 - ER 11 GE / H 130	40	ER 11 1÷ 8	19	130	•	812-203008	811-102114	2905	ER11
3450	4846	BT 40 - ER 11 GE / H 160	40	ER 11 1÷ 8	19	160	•	812-203008	811-102114	2905	ER11
214-31539EXA	8104	BT 40 - ER 16 GE / H 70	40	ER 16 1÷12	28	70	•	812-203009	811-102038	816-203012	ER16
214-31527EXA	8105	BT 40 - ER 16 GE / H 100	40	ER 16 1÷12	28	100	•	812-203009	811-102038	816-203012	ER16
8090	8106	BT 40 - ER 16 GE / H 130	40	ER 16 1÷12	28	130	•	812-203009	811-102038	816-203012	ER16
214-31442EXA	8107	BT 40 - ER 16 GE / H 160	40	ER 16 1÷12	28	160	•	812-203009	811-102038	816-203012	ER16
8092	-	BT 40 - ER 16 GE / H 200	40	ER 16 1÷12	28	200	•	812-203009	811-102038	816-203012	ER16
8093	8109	BT 40 - ER 20 GE / H 70	40	ER 20 1÷15	34	70	•	812-203010	811-106005	816-203013	ER20
8094	8110	BT 40 - ER 20 GE / H 100	40	ER 20 1÷15	34	100	•	812-203010	811-106005	816-203013	ER20
8095	8111	BT 40 - ER 20 GE / H 130	40	ER 20 1÷15	34	130	•	812-203010	811-106005	816-203013	ER20
8096	8112	BT 40 - ER 20 GE / H 160	40	ER 20 1÷15	34	160	•	812-203010	811-106005	816-203013	ER20
8097	-	BT 40 - ER 20 GE / H 200	40	ER 20 1÷15	34	200	•	812-203010	811-106005	816-203013	ER20

ACCESSORIES

p. 649

p. 631

p. 653

ER COLLET CHUCKS - HIGH PRECISION

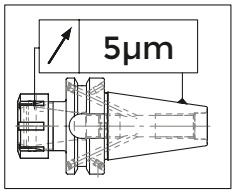

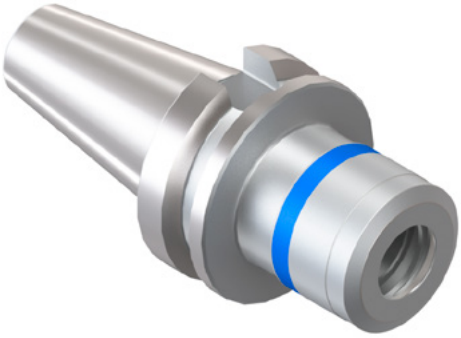

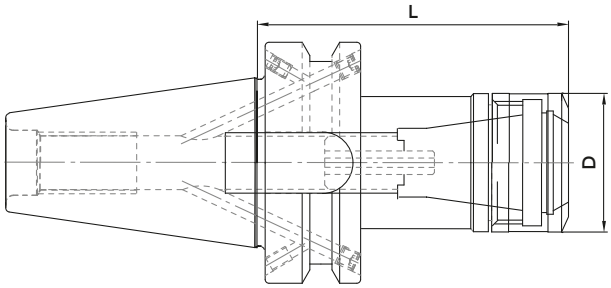

H= 0 > 100 mm - 5 µm
H= 100 > 200 mm - 10 µm

MAS BT AD+B - DIN 6499

COD.	DESCRIPTION	ISO	L	D	ER	G2.5 30000	NUT	WRENCH
214-91473*	BT30H70ER16-HP	30	70	30	16	•	812-203085	816-203069
214-91474*	BT30H70ER25-HP	30	70	40	25	•	812-203086	816-203070
214-91475*	BT30H70ER32-HP	30	70	50	32	•	812-203087	816-203071
214-91462	BT40H70ER16-HP	40	70	30	16	•	812-203085	816-203069
214-91463	BT40H70ER25-HP	40	70	40	25	•	812-203086	816-203070
214-91464	BT40H70ER32-HP	40	70	50	32	•	812-203087	816-203071
214-91467	BT40H100ER16-HP	40	100	30	16	•	812-203085	816-203069
214-91469	BT40H100ER25-HP	40	100	40	25	•	812-203086	816-203070
214-91470	BT40H100ER32-HP	40	100	50	32	•	812-203087	816-203071
214-91465	BT50H80ER16-HP	50	80	30	16	•	812-203085	816-203069
214-91471	BT50H100ER16-HP	50	100	30	16	•	812-203085	816-203069
214-91472	BT50H100ER32-HP	50	100	50	32	•	812-203087	816-203071

* for BT30, AD shape only

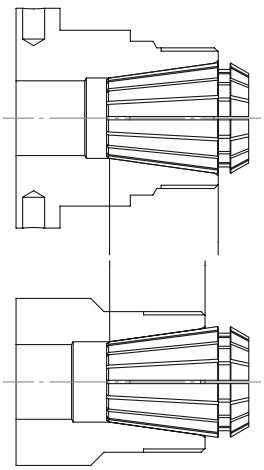

HIGH PRECISION LINE

STANDARD

Kit:
- 1 holder
- 10 collets

COD.	DESCRIPTION
KIT BT40 ER16 HP	BT40 ER16 H70 HP
KIT BT40 ER25 HP	BT40 ER25 H70 HP
KIT BT40 ER32 HP	BT40 ER32 H70 HP

ACCESSORIES

p. 650

p. 631

p. 654

ER COLLET CHUCKS

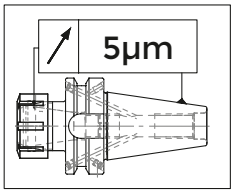

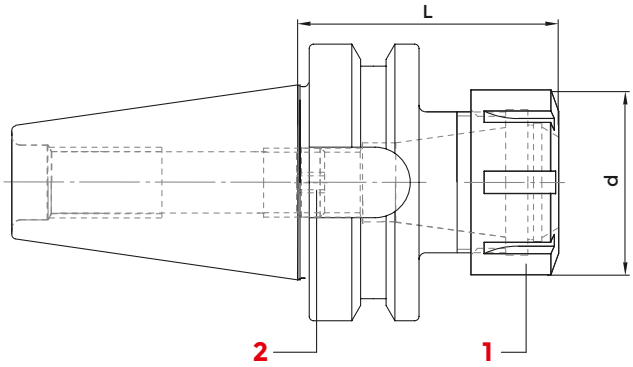

H= 0 > 100 mm - 5 µm
H= 100 > 200 mm - 10 µm

JIS-B 6339 MAS 403/BT AD - DIN 6499/ISO15488

COD. (AD)	COD. (AD+B)	DESCRIPTION	ISO	ER	d	L	G6,3 12000	G6,3 15000	1 NUT	2 SCREW	WRENCH	COLLET
214-31511	-	BT 30 - ER16 / H 60	30	ER 16 1÷12	32	55	-	•	812-203005	811-102030	816-203000	ER16
214-31520	-	BT 30 - ER16 / H 100	30	ER 16 1÷12	32	100	-	•	812-203005	811-102030	816-203000	ER16
214-31585	-	BT 30 - ER20 / H 60	30	ER 20 1÷15	35	55	-	•	812-203006	811-102030	816-203005	ER20
214-31573	-	BT 30 - ER20 / H 100	30	ER 20 1÷15	35	100	-	•	812-203006	811-102030	816-203005	ER20
214-31512	-	BT 30 - ER25 / H 60	30	ER 25 1÷20	42	55	-	•	812-203001	0190	816-203001	ER25
214-31538	-	BT 30 - ER25 / H 100	30	ER 25 1÷20	42	100	-	•	812-203001	0190	816-203001	ER25
214-31525	-	BT 30 - ER32 / H 60	30	ER 32 2÷25	50	60	-	•	812-203002	0190	816-203002	ER32
3252	-	BT 30 - ER32 / H 100	30	ER 32 2÷25	50	100	-	•	812-203002	0190	816-203002	ER32
214-31539	214-31447	BT 40 - ER16 / H 70	40	ER 16 1÷12	32	70	-	•	812-203005	811-102038	816-203000	ER16
214-31527	214-31448	BT 40 - ER16 / H 100	40	ER 16 1÷12	32	100	-	•	812-203005	811-102038	816-203000	ER16
214-31477	4847	BT 40 - ER16 / H 130	40	ER 16 1÷12	32	130	-	•	812-203005	811-102038	816-203000	ER16
214-31442	4874	BT 40 - ER16 / H 160	40	ER 16 1÷12	32	160	-	•	812-203005	811-102038	816-203000	ER16
214-31454	4852	BT 40 - ER16 / H 200	40	ER 16 1÷12	32	200	-	•	812-203005	811-102038	816-203000	ER16
214-31555	214-31474	BT 40 - ER20 / H 70	40	ER 20 1÷15	35	70	-	•	812-203006	4973	816-203005	ER20
214-31556	214-31475	BT 40 - ER20 / H 100	40	ER 20 1÷15	35	100	-	•	812-203006	4973	816-203005	ER20
214-31478	4853	BT 40 - ER20 / H 130	40	ER 20 1÷15	35	130	-	•	812-203006	4973	816-203005	ER20
3114	4877	BT 40 - ER20 / H 160	40	ER 20 1÷15	35	160	-	•	812-203006	4973	816-203005	ER20
3499	4854	BT 40 - ER20 / H 200	40	ER 20 1÷15	35	200	-	•	812-203006	4973	816-203005	ER20
214-31501	214-31422	BT 40 - ER25 / H 70	40	ER 25 1÷20	42	70	-	•	812-203001	0190	816-203001	ER25
214-31542	214-31439	BT 40 - ER25 / H 100	40	ER 25 1÷20	42	100	-	•	812-203001	0190	816-203001	ER25
214-31479	4880	BT 40 - ER25 / H 130	40	ER 25 1÷20	42	130	-	•	812-203001	0190	816-203001	ER25
214-31432	BT40H160ER25ADB	BT 40 - ER25 / H 160	40	ER 25 1÷20	42	160	-	•	812-203001	0190	816-203001	ER25
214-31455	4811	BT 40 - ER25 / H 200	40	ER 25 1÷20	42	200	-	•	812-203001	0190	816-203001	ER25
214-31502	214-31423	BT 40 - ER32 / H 70	40	ER 32 2÷25	50	70	-	•	812-203002	811-303118	816-203002	ER32
214-31545	214-31440	BT 40 - ER32 / H 100	40	ER 32 2÷25	50	100	-	•	812-203002	811-303118	816-203002	ER32
214-31480	4884	BT 40 - ER32 / H 130	40	ER 32 2÷25	50	130	-	•	812-203002	811-303118	816-203002	ER32
214-31433	4885	BT 40 - ER32 / H 160	40	ER 32 2÷25	50	160	-	•	812-203002	811-303118	816-203002	ER32
214-31456	4886	BT 40 - ER32 / H 200	40	ER 32 2÷25	50	200	-	•	812-203002	811-303118	816-203002	ER32
214-31515	214-31424	BT 40 - ER40 / H 70	40	ER 40 3÷32	63	70	-	•	812-203003	0195	816-203003	ER40
214-31583	214-31449	BT 40 - ER40 / H 100	40	ER 40 3÷32	63	100	-	•	812-203003	0195	816-203003	ER40

follows >>

ER COLLET CHUCKS

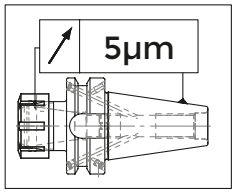

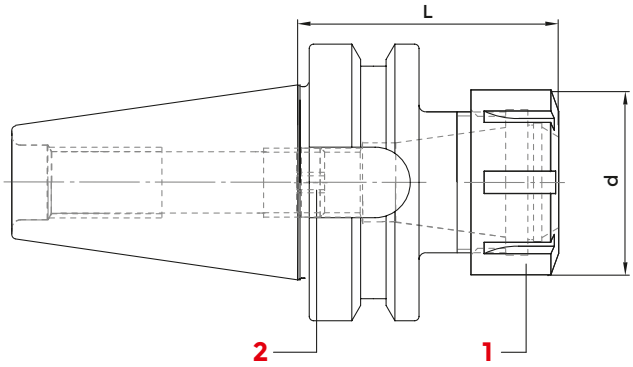

H= 0 > 100 mm - 5 µm
H= 100 > 200 mm - 10 µm

JIS-B 6339 MAS 403/BT AD - DIN 6499/ISO15488

COD. (AD)	COD. (AD+B)	DESCRIPTION	ISO	ER	d	L	G6,3 12000	G6,3 15000	1 NUT	2 SCREW	WRENCH	COLLET
214-31481	4889	BT 40 - ER40 / H 130	40	ER 40 3÷32	63	130	-	•	812-203003	0195	816-203003	ER40
214-31451	4890	BT 40 - ER40 / H 160	40	ER 40 3÷32	63	160	-	•	812-203003	0195	816-203003	ER40
214-31457	4891	BT 40 - ER40 / H 200	40	ER 40 3÷32	63	200	-	•	812-203003	0195	816-203003	ER40
3265	4931	BT 40 - ER50 / H 85	40	ER 50 6÷36	78	85	-	•	812-203007	0195	816-203004	ER50
9008	-	BT 50 - ER16 / H 80	50	ER 16 1÷12	32	80	•	-	812-203005	811-102038	816-203000	ER16
214-31450	4892	BT 50 - ER16 / H 100	50	ER 16 1÷12	32	100	•	-	812-203005	811-102038	816-203000	ER16
214-31452	4893	BT 50 - ER16 / H 160	50	ER 16 1÷12	32	160	•	-	812-203005	811-102038	816-203000	ER16
214-31458	4957	BT 50 - ER16 / H 200	50	ER 16 1÷12	32	200	•	-	812-203005	811-102038	816-203000	ER16
214-31476	4894	BT 50 - ER20 / H 100	50	ER 20 1÷15	35	100	•	-	812-203006	4973	816-203005	ER20
3120	4895	BT 50 - ER20 / H 160	50	ER 20 1÷15	35	160	•	-	812-203006	4973	816-203005	ER20
214-31549	214-31429	BT 50 - ER25 / H 80	50	ER 25 1÷20	42	80	•	-	812-203001	0190	816-203001	ER25
214-31438	4897	BT 50 - ER25 / H 100	50	ER 25 1÷20	42	100	•	-	812-203001	0190	816-203001	ER25
214-31453	4898	BT 50 - ER25 / H 160	50	ER 25 1÷20	42	160	•	-	812-203001	0190	816-203001	ER25
214-31459	4959	BT 50 - ER25 / H 200	50	ER 25 1÷20	42	200	•	-	812-203001	0190	816-203001	ER25
214-31503	214-31430	BT 50 - ER32 / H 80	50	ER 32 2÷25	50	80	•	-	812-203002	811-303118	816-203002	ER32
214-31434	4900	BT 50 - ER32 / H 100	50	ER 32 2÷25	50	100	•	-	812-203002	811-303118	816-203002	ER32
BT50H130ER32AD	4901	BT 50 - ER32 / H 130	50	ER 32 2÷25	50	130	•	-	812-203002	811-303118	816-203002	ER32
214-31435	4902	BT 50 - ER32 / H 160	50	ER 32 2÷25	50	160	•	-	812-203002	811-303118	816-203002	ER32
214-31460	4903	BT 50 - ER32 / H 200	50	ER 32 2÷25	50	200	•	-	812-203002	811-303118	816-203002	ER32
3400	4961	BT 50 - ER32 / H 250	50	ER 32 2÷25	50	250	•	-	812-203002	811-303118	816-203002	ER32
214-31504	214-31431	BT 50 - ER40 / H 80	50	ER 40 3÷32	63	80	•	-	812-203003	0195	816-203003	ER40
214-31436	4905	BT 50 - ER40 / H 100	50	ER 40 3÷32	63	100	•	-	812-203003	0195	816-203003	ER40
214-31510	4906	BT 50 - ER40 / H 130	50	ER 40 3÷32	63	130	•	-	812-203003	0195	816-203003	ER40
214-31437	4907	BT 50 - ER40 / H 160	50	ER 40 3÷32	63	160	•	-	812-203003	0195	816-203003	ER40
214-31461	4908	BT 50 - ER40 / H 200	50	ER 40 3÷32	63	200	•	-	812-203003	0195	816-203003	ER40
3473	4999	BT 50 - ER50 / H 100	50	ER 50 6÷36	78	100	•	-	812-203007	0195	816-203004	ER50
8046	8047	BT 50 - ER50 / H 160	50	ER 50 6÷36	78	160	•	-	812-203007	0195	816-203004	ER50

ACCESSORIES

p. 649

p. 631

p. 653

EQUIPMENT CASE WITH REDUCED SET OF ER COLLETS, AD SHAPE COLLET CHUCK AND WRENCH

COD.	DESCRIPTION	ISO	CHUCK	CASE	WRENCH	COLLET
7784	KIT Rid BT 30 / H 55 - ER 25	30	214-31512	7022	816-203001	ER25: Ø 4 - 6 - 8 -10 -12 -16
7785	KIT Rid BT 30 / H 60 - ER 32	30	214-31525	7023	816-203002	ER32: Ø 4 - 6 - 8 -10 -12 -16 - 20
7786	KIT Rid BT 40 / H 70 - ER 25	40	214-31501	7022	816-203001	ER25: Ø 4 - 6 - 8 -10 -12 -16
7787	KIT Rid BT 40 / H 70 - ER 32	40	214-31502	7023	816-203002	ER32: Ø 4 - 6 - 8 -10 -12 -16 - 20
7788	KIT Rid BT 40 / H 70 - ER 40	40	214-31515	7024	816-203003	ER40: Ø 4 - 6 - 8 -10 -12 -16 - 20 -25
7789	KIT Rid BT 50 / H 80 - ER 32	50	214-31503	7023	816-203002	ER32: Ø 4 - 6 - 8 -10 -12 -16 - 20
7790	KIT Rid BT 50 / H 80 - ER 40	50	214-31504	7024	816-203003	ER40: Ø 4 - 6 - 8 -10 -12 -16 - 20 -25

EQUIPMENT CASE WITH COMPLETE SET OF ER COLLETS, AD SHAPE COLLET CHUCK AND WRENCH

COD.	DESCRIPTION	ISO	CHUCK	CASE	WRENCH	COLLET
7791	KIT BT 30 / H 55 - ER 25	30	214-31512	7022	816-203001	ER25: Ø 2 ÷ 16 (15 Pinze)
7792	KIT BT 30 / H 60 - ER 32	30	214-31525	7023	816-203002	ER32: Ø 3 ÷ 20 (18 Pinze)
7793	KIT BT 40 / H 70 - ER 25	40	214-31501	7022	816-203001	ER25: Ø 2 ÷ 16 (15 Pinze)
7794	KIT BT 40 / H 70 - ER 32	40	214-31502	7023	816-203002	ER32: Ø 3 ÷ 20 (18 Pinze)
7795	KIT BT 40 / H 70 - ER 40	40	214-31515	7024	816-203003	ER40: Ø 4 ÷ 26 (23 Pinze)
7796	KIT BT 50 / H 80 - ER 32	50	214-31503	7023	816-203002	ER32: Ø 3 ÷ 20 (18 Pinze)
7797	KIT BT 50 / H 80 - ER 40	50	214-31504	7024	816-203003	ER40: Ø 4 ÷ 26 (23 Pinze)

ER COLLET CHUCKS - HIGH SPEED LINE

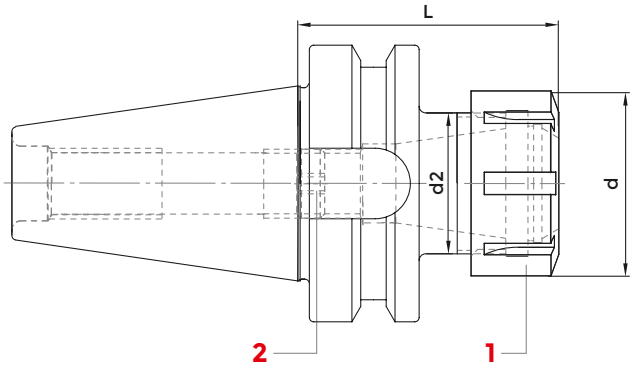

JIS-B 6339 MAS 403/BT AD - DIN6499/ISO15488 HIGH SPEED LINE

COD.	DESCRIPTION	ISO	ER	d	d2	L	G2,5 30000	2 SCREW
214-91458	BT30H60ER16	30	16	32	22	60	•	811-102030
214-91459	BT30H60ER20	30	20	35	25	60	•	811-102030
214-91460	BT30H60ER25	30	25	42	32	60	•	0190
214-91461	BT30H60ER32	30	32	50	40	60	•	0190
214-91401	BT40H70ER16	40	16	32	22	70	•	811-102038
214-91408	BT40H100ER16	40	16	32	31.5	100	•	811-102038
214-91402	BT40H70ER25	40	25	42	32	70	•	0190
214-91409	BT40H100ER25	40	25	42	41.5	100	•	0190
214-91403	BT40H70ER32	40	32	50	40	70	•	0190
214-91410	BT40H100ER32	40	32	50	49.5	100	•	0190
214-91406	BT50H80ER32	50	32	50	40	80	•	0190

ACCESSORIES

p. 649

p. 631

p. 653

DIN6388 (EOC) COLLET CHUCKS

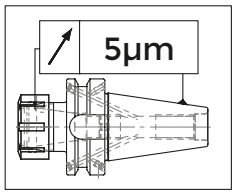

H= 0 > 100 mm - 5 µm
H= 100 > 200 mm - 10 µm

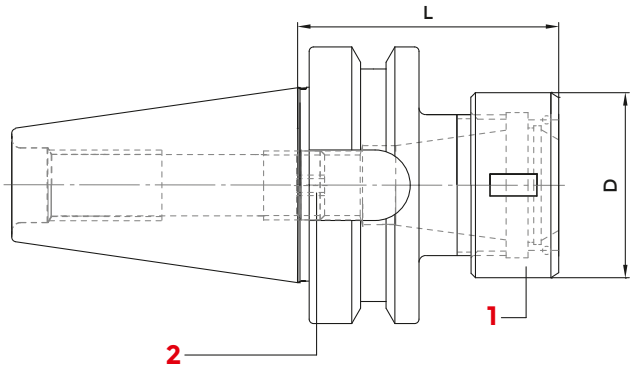

JIS-B 6339 MAS 403/BT AD - DIN 6388

COD.	DESCRIPTION	ISO	EOC	d	L	G6.3 12000	G6.3 15000	1 NUT	2 WRENCH	COLLET
8726	BT 40 - EOC 16 / H 70	40	EOC 16 2÷16	43	70	-	•	GOC16	816-203032	EOC16
214-11402	BT 40 - EOC 25 / H 70	40	EOC 25 2÷25	60	70	-	•	GOC25	816-203034	EOC25
8732	BT 40 - EOC 32 / H 80	40	EOC 32 3÷32	72	80	-	•	GOC32	816-203036	EOC32
8735	BT 50 - EOC 25 / H 85	50	EOC 25 2÷25	60	85	•	-	GOC25	816-203034	EOC25
8738	BT 50 - EOC 32 / H 95	50	EOC 32 3÷32	72	95	•	-	GOC32	816-203036	EOC32
8739	BT 50 - EOC 32 / H 130	50	EOC 32 3÷32	72	130	•	-	GOC32	816-203036	EOC32

ACCESSORIES

p. 706

p. 705

p. 654

ER SHORT COLLET CHUCK WITH INNER NUT

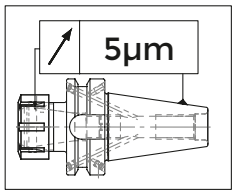

H= 0 > 100 mm - 5 µm
H= 100 > 200 mm - 10 µm

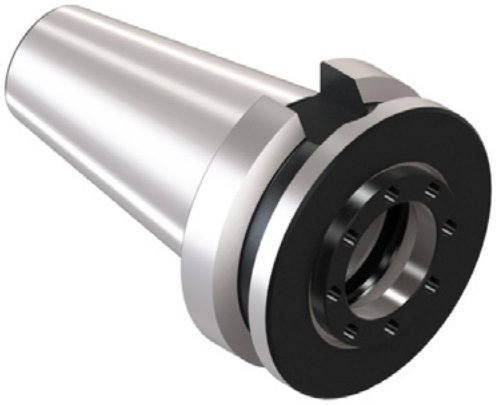

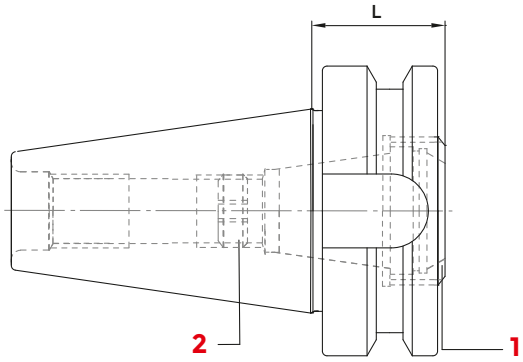

JIS-B 6339 MAS 403/BT AD - MAS 403/BT A

COD.	DESCRIPTION	ISO	L	ER	G6.3 12000	G6.3 15000	1 NUT	2 WRENCH	COLLET
214-31462	BT 40 - ER 25 GA	40	29	ER 25 1÷20	-	•	812-203057	CHER25EX	ER25
214-31571	BT 40 - ER 32 GA	40	29	ER 32 2÷25	-	•	812-203032	CHER32EX	ER32
214-31463	BT 50 - ER 32 GA	50	40	ER 32 2÷25	•	-	812-203032	CHER32EX	ER32

ACCESSORIES

p. 651

p. 631

p. 651

MILLING CHUCK

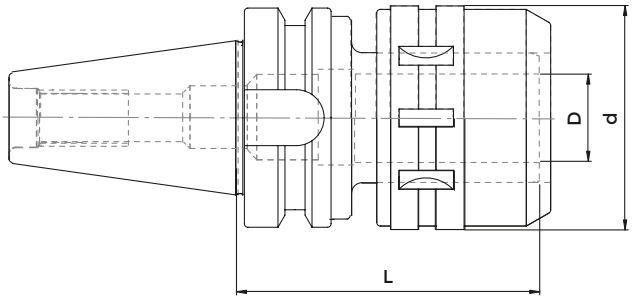

JIS-B 6339 MAS 403/BT AD

COD. (AD)	COD. (AD+B)	DESCRIPTION	ISO	D	L	d	G6.3 12000	COLLET
214-01508	214-01601	BT 40 - PC 20 / H 80	40	20	80	54	•	K20D..
214-01501	-	BT 40 - PC 20 / H 105	40	20	105	54	•	K20D..
-	214-01602	BT 40 - PC 32 / H 85	40	32	85	63	•	K32D..
214-01502	-	BT 40 - PC 32 / H 105	40	32	105	72	•	K32D..
5133	9650	BT 40 - PC 32 / H 135	40	32	135	63	•	K32D..
214-01504	9651	BT 50 - PC 20 / H 105	50	20	105	54	•	K20D..
-	9652	BT 50 - PC 20 / H 135	50	20	135	50	•	K20D..
214-01505	9653	BT 50 - PC 32 / H 105	50	32	105	72	•	K32D..
214-01506	9654	BT 50 - PC 32 / H 135	50	32	135	72	•	K32D..

Supplied with wrench

MILLING CHUCK Ø	SPECIFICATION DIN 7178-1	TOLLERANCE	RUN-OUT (3D)	CLAMPING TORQUE
C20	AT3	BT40 (0~+0,003)	0~0,01	980M.m (100Kgf.m)
C32	AT3	BT50 (0~+0,004)	0~0,01	3430M.m (350Kgf.m)

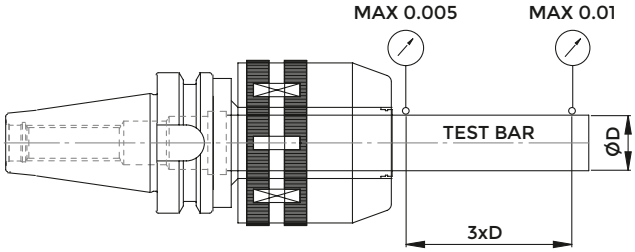

ACCESSORIES

p. 707

MILLING CHUCK KIT

COD.	DESCRIPTION	ISO	CHUCK	CASE	WRENCH	COLLET
KITBT40C20	KIT BT 40 - PC 20 / H 80	40	214-01508	3695	2900	K20D..: Ø 6 - 8 - 10 - 12 - 16
KITBT40C20DK	KIT BT 40 - PC 20 / H 105	40	214-01501	3695	2900	K20D..: Ø 6 - 8 - 10 - 12 - 16
KITBT40C32DK	KIT BT 40 - PC 32 / H 105	40	214-01502	3695	816-203036	K32D..: Ø 6 - 8 - 10 - 12 - 16 - 20 - 25
KITBT50C20	KIT BT 50 - PC 20 / H 105	50	214-01504	3695	2900	K20D..: Ø 6 - 8 - 10 - 12 - 16
KITBT50C32	KIT BT 50 - PC 32 / H 105	50	214-01505	3695	816-203036	K32D..: Ø 6 - 8 - 10 - 12 - 16 - 20 - 25

MILLING CHUCK - HIGH SPEED LINE

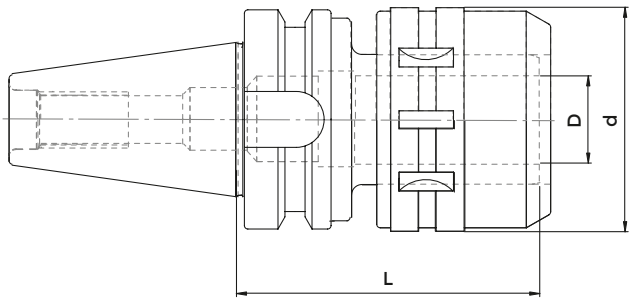

JIS-B 6339 MAS 403/BT

HIGH SPEED LINE

COD.	DESCRIPTION	ISO	D	d	L	G6.3 20000
214-01510	BT40H80C20HS	40	20	54	80	•
214-01511	BT40H105C20HS	40	20	54	105	•
214-01513	BT50H105C20HS	50	20	54	105	•
214-01514	BT50H105C32HS	50	32	74	105	•

Supplied with wrench

ACCESSORIES

p. 707

MILLING CHUCK KIT - HIGH SPEED LINE

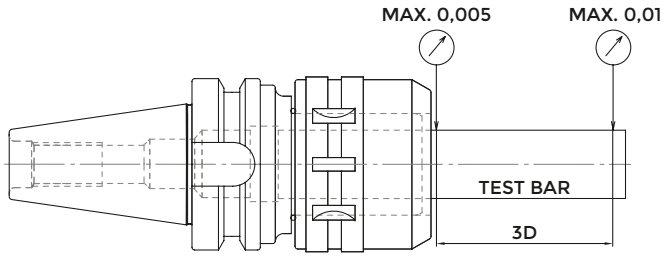

HIGH SPEED LINE

COD.	DESCRIPTION
KIT BT40 C20HS	N°1 BT40 L90 C20 + n°5 collets K20: Ø6,8,10,12,16
KIT BT40 C32HS	N°1 BT40 L105 C32 + n°7 collets K32: Ø6,8,10,12,16,20,25

TENSION/COMPRESSION QUICK CHANGE TAPPING HEADS

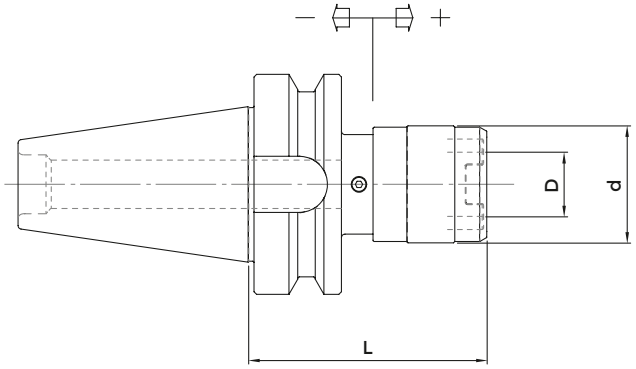

JIS-B 6339 MAS 403/BT A

COD.	DESCRIPTION	ISO	D	d	L	RANGE	TAP SIZE RANGE
2863	BT 30 - B. 1	30	19	38	63	-7,5 + 7,5	M 3 ÷ M 12 (* M 18)
2865	BT 30 - B. 2	30	31	55	96	-12,5 + 12,5	M 6 ÷ M 20 (* M 30)
M3310	BT 40 - B. 1	40	19	38	68	-7,5 + 7,5	M 3 ÷ M 12 (* M 18)
M3410	BT 40 - B. 2	40	31	55	93	-12,5 + 12,5	M 6 ÷ M 20 (* M 30)
3526	BT 40 - B. 3	40	48	79	164	-20,0 + 20,0	M 14 ÷ M 33 (* M 48)
M3320	BT 50 - B. 1	50	19	38	80	-7,5 + 7,5	M 3 ÷ M 12 (* M 18)
M3430	BT 50 - B. 2	50	31	55	102	-12,5 + 12,5	M 6 ÷ M 20 (* M 30)
M3530	BT 50 - B. 3	50	48	79	133	-20,0 + 20,0	M 14 ÷ M 33 (* M 48)

* Adapters with screws

SOLID TAPPING HEADS

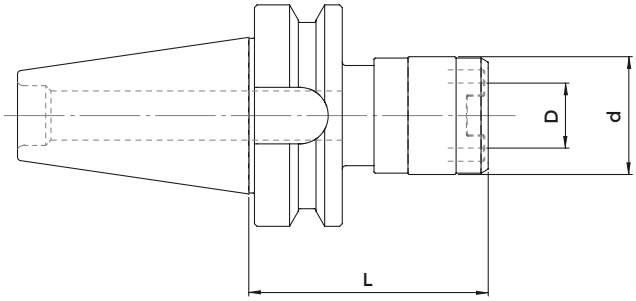

JIS-B 6339 MAS 403/BT A

COD.	DESCRIPTION	ISO	D	d	L	TAP SIZE RANGE
M6010	BT 40 - B. 1 FISSO	40	19	33	67	M 3 ÷ M 12 (* M 18)
M6020	BT 40 - B. 2 FISSO	40	31	50	90	M 6 ÷ M 20 (* M 30)
5711	BT 40 - B. 3 FISSO	40	48	72	117	M 14 ÷ M 33 (* M 48)

* Adapters with screws

DRILL CHUCKS ADAPTERS

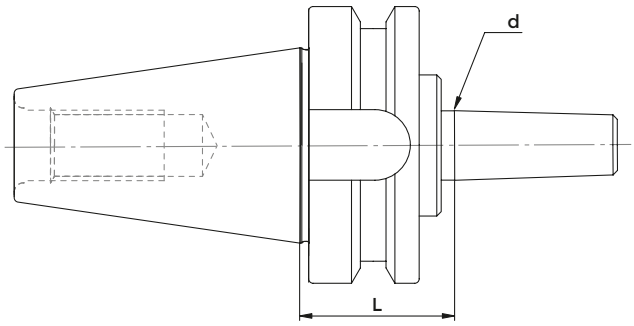

JIS-B 6339 MAS 403/BT AD - DIN 238

COD.	DESCRIPTION	ISO	L	d	G6.3 8000
3994	BT 30 - B 16	30	40	15,733	•
3865	BT 40 - B 12	40	40	12,065	•
216-31502	BT 40 - B 16	40	40	15,733	•
3995	BT 40 - B 18	40	40	17,78	•
3996	BT 50 - B 16	50	45	15,733	•
3997	BT 50 - B 18	50	45	17,78	•

DRILL CHUCKS - RIGHT SPIN

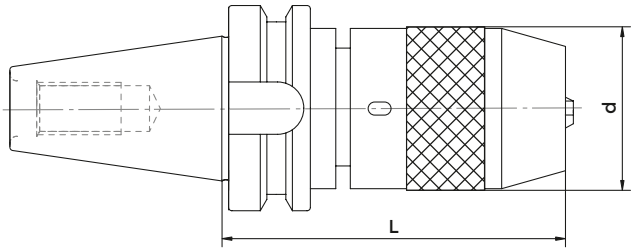

JIS-B 6339 MAS 403/BT A

COD.	DESCRIPTION	ISO	DRILL RANGE	L	d	G6.3 8000	CLAMPS	SCREW	WRENCH
8593	BT 30 - DC 13	30	0,5 ÷ 13	90	50	•	832-012020	9021	816-111024
252-11501	BT 40 - DC 13	40	0,5 ÷ 13	90	50	•	832-012020	9021	816-111024
252-11502	BT 40 - DC 16	40	3 ÷ 16	120	57	•	832-012021	9023	816-111025
252-11503	BT 50 - DC 13	50	0,5 ÷ 13	110	50	•	832-012020	9021	816-111024
252-11504	BT 50 - DC 16	50	3 ÷ 16	110	57	•	832-012021	9023	816-111025

DRILL CHUCKS
LEFT AND RIGHT SPIN

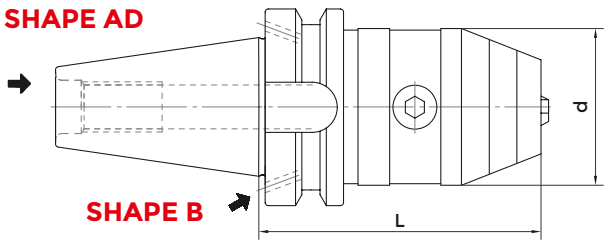

JIS-B 6339 MAS 403/BT A - MAS 403BT/ADB

COD. (AD)	COD. (AD+B)	DESCRIPTION	ISO	DRILL RANGE	L	d	G6.3 8000	SCREW
252-11400	-	BT 30 - DCU 13	30	0,5 ÷ 13	100	50	•	816-152001
252-11410	8599	BT 40 - DCU 13	40	0,5 ÷ 13	98	50	•	816-152001
252-11411	8600	BT 40 - DCU 16	40	3 ÷ 16	103	50	•	816-152001
252-11412	8601	BT 50 - DCU 13	50	0,5 ÷ 13	110	50	•	816-152001
252-11413	8602	BT 50 - DCU 16	50	3 ÷ 16	112	50	•	816-152001

BLANK BARS

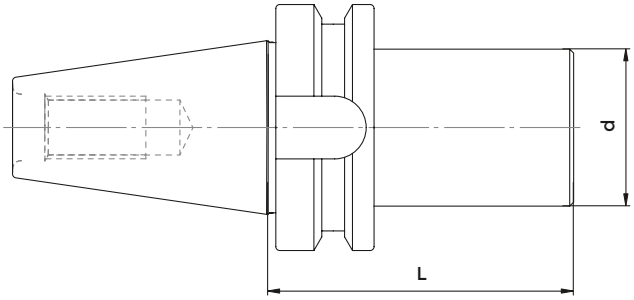

JIS-B 6339 MAS 403/BT A - AD

COD.	DESCRIPTION	ISO	d	L
217-41502	BT 40 - D. 40 ST	40	40	160
4368	BT 40 - D. 50 ST	40	50	200
217-41503	BT 40 - D. 63 ST	40	63	160
217-41504	BT 40 - D. 63 ST	40	63	250
4372	BT 50 - D. 63 ST	50	63	250
217-41507	BT 50 - D. 80 ST	50	80	300

DOUBLE CONTACT TOOLHOLDERS

DK

DOUBLE CONTACT TOOLHOLDERS DK

SEVERAL ADVANTAGES OF DOUBLE CONTACT TOOLHOLDER DK:

- Enhanced rigidity thanks to simultaneous fit of taper and flange
- Improvement of the life of the cutting tool
- Improved stability leads to minimized vibration
- Greater bending stiffness allows for higher cutting data, hence higher productivity.

HIGH PRECISION LINE

- RUN OUT 5 MICRON at 2,5 times the diameter achieved only by using HP ER collets.
- The High level of accuracy is achieved either on the NOMINAL DIAMETER or by clamping the tool whose diameter is maximum 0,5 mm smaller than the nominal diameter.
- 20% higher clamping force (compared to standard ER collet chuck system).

RUN-OUT

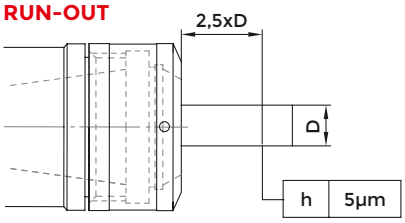

TECHNICAL FEATURES KINTEK SK TOOLHOLDERS

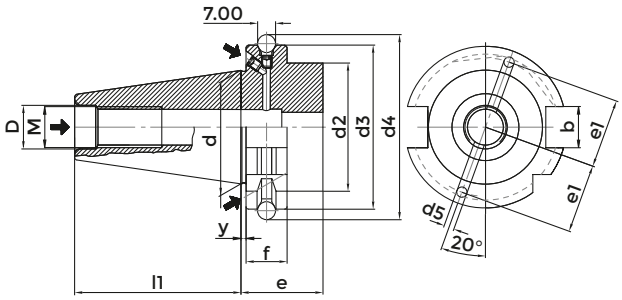

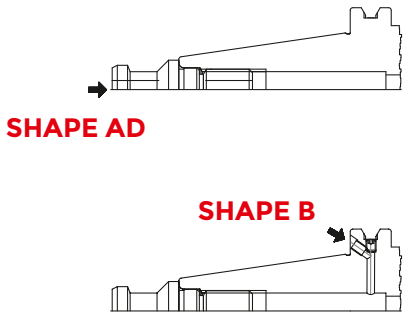

DIN69871 - SK - SHAPE AD

ISO	d	l1	D	M	y	d2	f	d3	d4	e	b
30	31,75	47,8	13	12	1	45	18	50	59,3	32,8	16,1
40	44,45	68,4	17	16	1	50	18	63,55	72,3	32,8	16,1
50	69,85	101,75	25	24	1,5	80	18	97,5	107,25	33,3	25,7

DIN69871 - SK - SHAPE AD/B

ISO	d	l1	D	M	y	d2	f	d3	d4	e	b	d5	e1
40	44,45	68,4	17	16	1	50	18	63,55	72,3	32,8	16,1	4	27
50	69,85	101,75	25	24	1,5	80	18	97,5	107,25	32,8	25,7	5	42

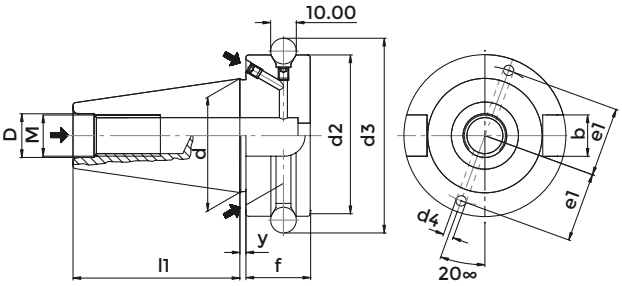

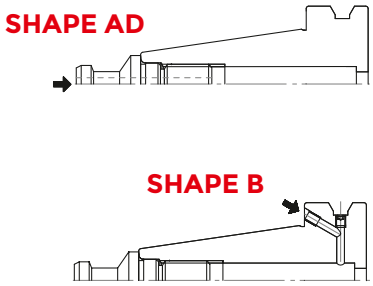

JIS-B 6339 MAS 403/BT SHAPE AD

ISO	d	l1	D	M	y	d2	f	d3	b
30	31,75	48,4	12,5	12	1	46	21	56,144	16,1
40	44,45	65,4	17	16	1	63	26	75,68	16,1
50	69,85	101,8	25	24	1,5	100	36,5	110,02	25,7

JIS-B 6339 MAS 403/BT SHAPE AD/B

ISO	d	l1	D	M	y	d2	f	d3	b	d5	e1
40	44,45	65,4	17	16	1	63	26	75,68	16,1	4	27
50	69,85	101,8	25	24	1,5	100	36,5	110,02	25,7	5	42

DOUBLE CONTACT ER COLLET CHUCKS - HIGH PRECISION

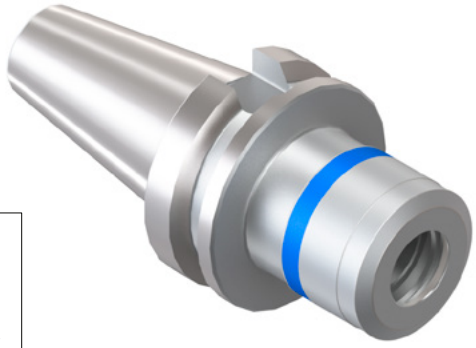

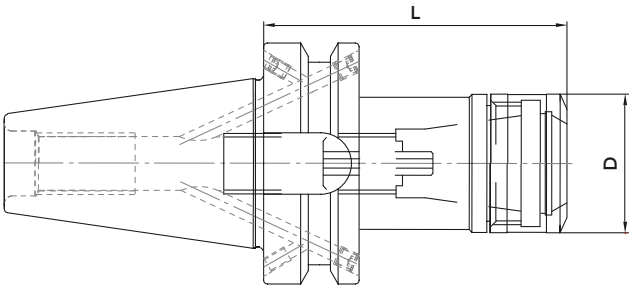

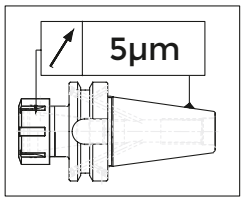

H= 0 > 100 mm - 5 µm
H= 100 > 200 mm - 10 µm

MAS BT AD+B DOUBLE CONTACT - DIN 6499

COD.	DESCRIPTION	ISO	L	d	ER	RANGE	G2,5 30000
*214-37231	BT30H70ER16-HPDK	30	70	30	16	1÷12	•
214-37219	BT40H70ER16-HPDK	40	70	30	16	1÷12	•
214-37220	BT40H70ER25-HPDK	40	70	40	25	1÷20	•
214-37221	BT40H70ER32-HPDK	40	70	50	32	1÷25	•
214-37224	BT40H100ER32-HPDK	40	100	50	32	1÷25	•

*for BT30, AD shape only
All suitable for collets

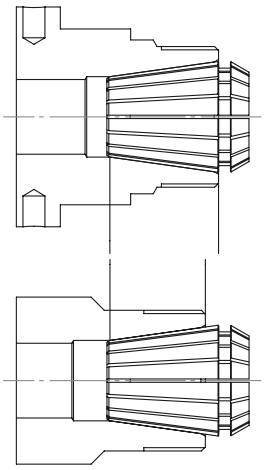

HIGH PRECISION LINE

STANDARD LINE

ACCESSORIES

p. 650

p. 654

DOUBLE CONTACT ER COLLET CHUCKS - HIGH PRECISION

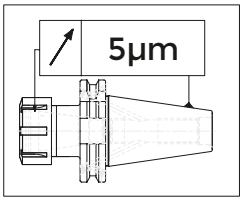

H= 0 > 100 mm - 5 µm
H= 100 > 200 mm - 10 µm

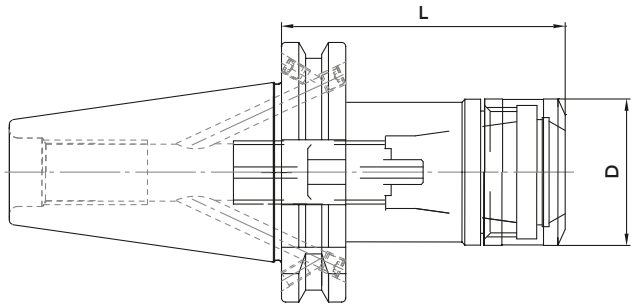

DIN69871 AD+B DOUBLE CONTACT - DIN 6499

COD.	DESCRIPTION	ISO	L	d	ER	RANGE	G2,5 30000
214-37115	TC40H70ER16-HPDK	40	70	30	16	1÷12	•
214-37116	TC40H70ER25-HPDK	40	70	40	25	1÷20	•
214-37117	TC40H70ER32-HPDK	40	70	50	32	1÷25	•
214-37118	TC40H100ER16-HPDK	40	100	30	16	1÷12	•
214-37119	TC40H100ER25-HPDK	40	100	40	25	1÷20	•
214-37120	TC40H100ER32-HPDK	40	100	50	32	1÷25	•

All suitable for collets

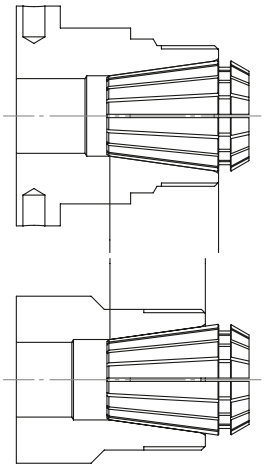

HIGH PRECISION LINE

STANDARD LINE

ACCESSORIES

p. 650

p. 654

DOUBLE CONTACT ER COLLET CHUCK WITH HEXAGONAL NUT

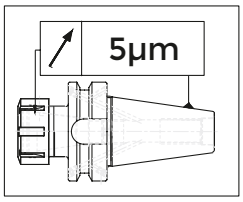

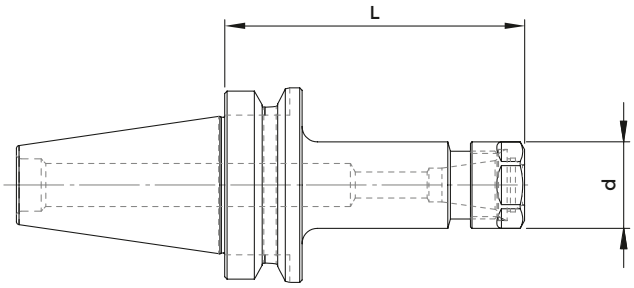

H= 0 > 100 mm - 5 µm
H= 100 > 200 mm - 10 µm

MAS 403/BT AD

COD.	DESCRIPTION	ISO	ER	RANGE	d	L	G6.3 15000	NUT	WRENCH	COLLET
10531	BT 30 - ER 16 GE / H 70	30	16	1÷12	28	70	•	812-203009	816-203012	ER16
214-37234	BT 30 - ER 16 GE / H 100	30	16	1÷12	28	100	•	812-203009	816-203012	ER16
10539	BT 40 - ER 16 GE / H 70	40	16	1÷12	28	70	•	812-203009	816-203012	ER16
214-37235	BT 40 - ER 16 GE / H 100	40	16	1÷12	28	100	•	812-203009	816-203012	ER16
10544	BT 40 - ER 20 GE / H 70	40	20	1÷12	28	100	•	812-203010	816-203013	ER20
10545	BT 40 - ER 20 GE / H 100	40	20	1÷12	28	100	•	812-203010	816-203013	ER20

ACCESSORIES

p. 649

p. 631

p. 653

DOUBLE CONTACT ER COLLET CHUCKS

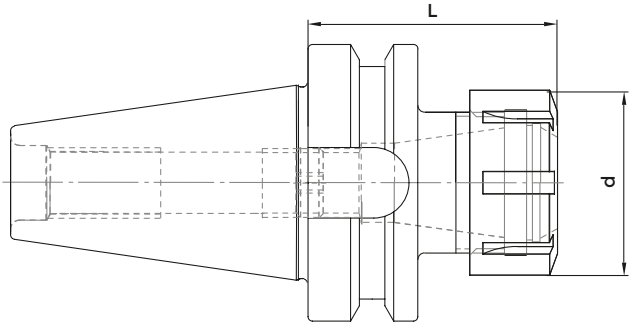

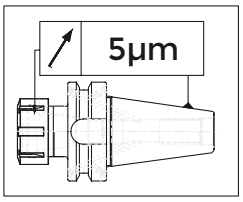

H= 0 > 100 mm - 5 µm
H= 100 > 200 mm - 10 µm

MAS 403/BT AD

COD.	DESCRIPTION	ISO	ER	RANGE	d	L	G6.3 12000	G6.3 15000	NUT	WRENCH	COLLET
214-37201	BT 30 - ER 16 / H 70	30	16	1÷12	32	70	-	•	812-203005	816-203000	ER16
214-37239	BT 30 - ER 16 / H 100	30	16	1÷12	32	100	-	•	812-203005	816-203000	ER16
214-37202	BT 30 - ER 20 / H 70	30	20	1÷15	35	70	-	•	812-203006	816-203005	ER20
214-37238	BT 30 - ER 20 / H 100	30	20	1÷15	35	100	-	•	812-203006	816-203005	ER20
214-37203	BT 30 - ER 25 / H 70	30	25	1÷20	42	70	-	•	812-203001	816-203001	ER25
214-37237	BT 30 - ER 25 / H 100	30	25	1÷20	42	100	-	•	812-203001	816-203001	ER25
214-37204	BT 30 - ER 32 / H 60	30	32	2÷25	50	60	-	•	812-203002	816-203002	ER32
214-37236	BT 30 - ER 32 / H 100	30	32	2÷25	50	100	-	•	812-203002	816-203002	ER32
214-37205	BT 40 - ER 16 / H 70	40	16	1÷12	32	70	-	•	812-203005	816-203000	ER16
214-37209	BT 40 - ER 16 / H 100	40	16	1÷12	32	100	-	•	812-203005	816-203000	ER16
214-37206	BT 40 - ER 25 / H 70	40	25	1÷20	42	70	-	•	812-203001	816-203001	ER25
214-37210	BT 40 - ER 25 / H 100	40	25	1÷20	42	100	-	•	812-203001	816-203001	ER25
214-37241	BT 40 - ER 25 / H 130	40	25	1÷20	42	130	-	•	812-203001	816-203001	ER25
214-37243	BT 40 - ER 25 / H 160	40	25	1÷20	42	160	-	•	812-203001	816-203001	ER25
214-37207	BT 40 - ER 32 / H 70	40	32	2÷25	50	70	-	•	812-203002	816-203002	ER32
214-37211	BT 40 - ER 32 / H 100	40	32	2÷25	50	100	-	•	812-203002	816-203002	ER32
214-37242	BT 40 - ER 32 / H 130	40	32	2÷25	50	130	-	•	812-203002	816-203002	ER32
214-37244	BT 40 - ER 32 / H 160	40	32	2÷25	50	160	-	•	812-203002	816-203002	ER32
214-37208	BT 40 - ER 40 / H 70	40	40	3÷32	63	70	-	•	812-203003	816-203003	ER40
214-37212	BT 40 - ER 40 / H 100	40	40	3÷32	63	100	-	•	812-203003	816-203003	ER40
10592	BT 40 - ER 50 / H 85	40	50	6÷36	78	85	-	•	812-203007	816-203004	ER50
214-37213	BT 50 - ER 32 / H 80	50	32	2÷25	50	80	•	-	812-203002	816-203002	ER32
214-37215	BT 50 - ER 32 / H 100	50	32	2÷25	50	100	•	-	812-203002	816-203002	ER32
214-37245	BT 50 - ER 32 / H 130	50	32	2÷25	50	130	•	-	812-203002	816-203002	ER32
214-37217	BT 50 - ER 32 / H 160	50	32	2÷25	50	160	•	-	812-203002	816-203002	ER32
214-37218	BT 50 - ER 32 / H 200	50	32	2÷25	50	200	•	-	812-203002	816-203002	ER32
214-37214	BT 50 - ER 40 / H 80	50	40	3÷32	63	80	•	-	812-203003	816-203003	ER40
214-37216	BT 50 - ER 40 / H 100	50	40	3÷32	63	100	•	-	812-203003	816-203003	ER40

ACCESSORIES

p. 649

p. 631

p. 653

DOUBLE CONTACT ER COLLET CHUCK WITH HEXAGONAL NUT

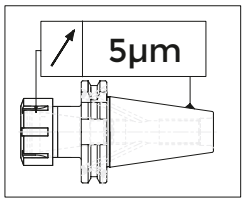

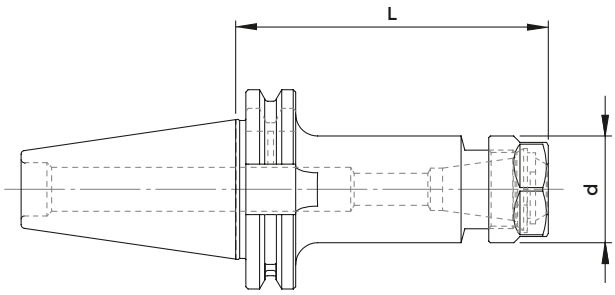

H= 0 > 100 mm - 5 µm
H= 100 > 200 mm - 10 µm

DIN 69871

COD.	DESCRIPTION	ISO	ER	RANGE	d	L	G6.3 15000	NUT	WRENCH	COLLET
10036	TC 40 - ER 16 GE / H 70	40	16	1÷12	28	70	•	812-203009	816-203012	ER16
10037	TC 40 - ER 16 GE / H 100	40	16	1÷12	28	100	•	812-203009	816-203012	ER16
10041	TC 40 - ER 20 GE / H 70	40	20	1÷15	34	70	•	812-203010	816-203013	ER20
10042	TC 40 - ER 20 GE / H 100	40	20	1÷15	34	100	•	812-203010	816-203013	ER20

ACCESSORIES

p. 649

p. 631

p. 653

ER COLLET CHUCKS

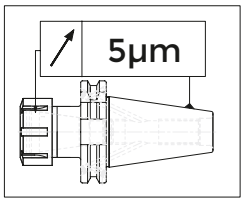

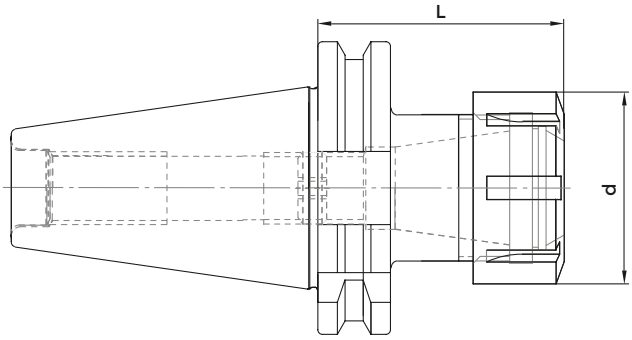

H= 0 > 100 mm - 5 µm
H= 100 > 200 mm - 10 µm

DIN 68971 AD

COD.	DESCRIPTION	ISO	ER	RANGE	d	L	G6.3 12000	G6.3 15000	NUT	WRENCH	COLLET
214-37101	TC 40 - ER 16 / H 70	40	16	1÷12	32	70	-	•	812-203005	816-203000	ER16
214-37105	TC 40 - ER 16 / H 100	40	16	1÷12	32	100	-	•	812-203005	816-203000	ER16
214-37134	TC 40 - ER 20 / H 70	40	20	1÷15	35	70	-	•	812-203006	816-203005	ER20
214-37135	TC 40 - ER 20 / H 100	40	20	1÷15	35	100	-	•	812-203006	816-203005	ER20
214-37102	TC 40 - ER 25 / H 70	40	25	1÷20	42	70	-	•	812-203001	816-203001	ER25
214-37106	TC 40 - ER 25 / H 100	40	25	1÷20	42	100	-	•	812-203001	816-203001	ER25
214-37136	TC 40 - ER 25 / H 130	40	25	1÷20	42	130	-	•	812-203001	816-203001	ER25
214-37103	TC 40 - ER 32 / H 70	40	32	2÷25	50	70	-	•	812-203002	816-203002	ER32
214-37107	TC 40 - ER 32 / H 100	40	32	2÷25	50	100	-	•	812-203002	816-203002	ER32
214-37137	TC 40 - ER 32 / H 130	40	32	2÷25	50	130	-	•	812-203002	816-203002	ER32
214-37138	TC 40 - ER 32 / H 160	40	32	2÷25	50	160	-	•	812-203002	816-203002	ER32
214-37104	TC 40 - ER 40 / H 70	40	40	3÷32	63	70	-	•	812-203003	816-203003	ER40
214-37108	TC 40 - ER 40 / H 100	40	50	6÷36	63	100	-	•	812-203003	816-203003	ER40
214-37139	TC 50 - ER 25 / H 70	50	25	1÷20	42	70	•	-	812-203001	816-203001	ER25
214-37140	TC 50 - ER 25 / H 100	50	25	1÷20	42	100	•	-	812-203001	816-203001	ER25
214-37109	TC 50 - ER 32 / H 70	50	32	2÷25	50	70	•	-	812-203002	816-203002	ER32
214-37111	TC 50 - ER 32 / H 100	50	32	2÷25	50	100	•	-	812-203002	816-203002	ER32
214-37141	TC 50 - ER 32 / H 130	50	32	2÷25	50	130	•	-	812-203002	816-203002	ER32
217-37113	TC 50 - ER 32 / H 160	50	32	2÷25	50	160	•	-	812-203002	816-203002	ER32
10096	TC 50 - ER 32 / H 200	50	32	2÷25	50	200	•	-	812-203002	816-203002	ER32
214-37110	TC 50 - ER 40 / H 80	50	40	3÷32	63	80	•	-	812-203003	816-203003	ER40

ACCESSORIES

p. 649

p. 631

p. 653

MILLING CHUCK

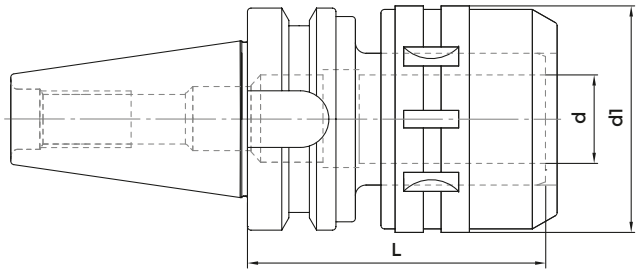

MAS 403/BT A

COD.	DESCRIPTION	ISO	d	d1	L	G6.3 12000	WRENCH	COLLET
214-07201	BT 40 - PC 20 / H 105	40	20	54	105	•	2900	K20D..
214-07202	BT 40 - PC 32 / H 105	40	32	72	105	•	816-203036	K32D..

Supplied with wrench

MILLING CHUCK KITS

COD.	DESCRIPTION	ISO	CHUCK	CASE	WRENCH	COLLET
KITBT40C20DK	KIT BT 40 - PC 20 / H 105	40	214-07201	3695	2900	K20D.. Ø 6 - 8 - 10 - 12 - 16
KITBT40C32DK	KIT BT 40 - PC 32 / H 105	40	214-07202	3695	816-203036	K32D.. Ø 6 - 8 - 10 - 12 - 16 - 20 - 25

MILLING CHUCK

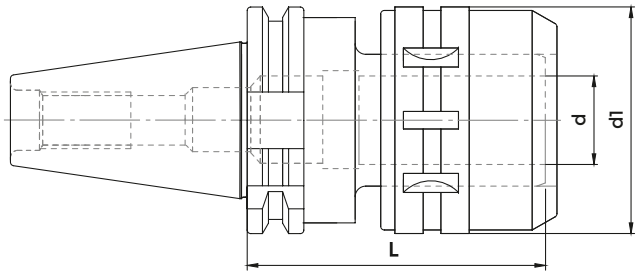

DIN 69871 AD

COD.	DESCRIPTION	ISO	d	d1	L	G6.3 12000	WRENCH	COLLET
214-07106	TC 40 - PC 16 / H 65	40	16	42	65	•	-	0805
214-07101	TC 40 - PC 20 / H 105	40	20	54	105	•	2900	K20D..
214-07102	TC 40 - PC 32 / H 105	40	32	72	105	•	816-203036	K32D..
214-07107	TC 50 - PC 20 / H 85	50	20	50	85	•	2900	K20D..
214-07108	TC 50 - PC 32 / H 95	50	32	63	95	•	816-203036	K32D..

Supplied with wrench

MILLING CHUCK KITS

COD.	DESCRIPTION	ISO	CHUCK	CASE	WRENCH	COLLET
KITTC40C20DK	KIT TC 40 - PC 20 / H 105	40	214-07101	3695	2900	K20D.. - Ø 6 - 8 - 10 - 12 - 16
KITTC40C32	KIT TC 40 - PC 32 / H 105	40	214-07102	3695	816-203036	K32D.. - Ø 6 - 8 - 10 - 12 - 16 - 20 - 25
KITTC50C20	KIT TC 50 - PC 20 / H 105	50	214-07107	3695	2900	K20D.. - Ø 6 - 8 - 10 - 12 - 16
KITTC50C32	KIT TC 50 - PC 32 / H 105	50	214-07108	3695	816-203036	K32D.. - Ø 6 - 8 - 10 - 12 - 16 - 20 - 25

FACE MILL HOLDERS - TENONS DRIVE

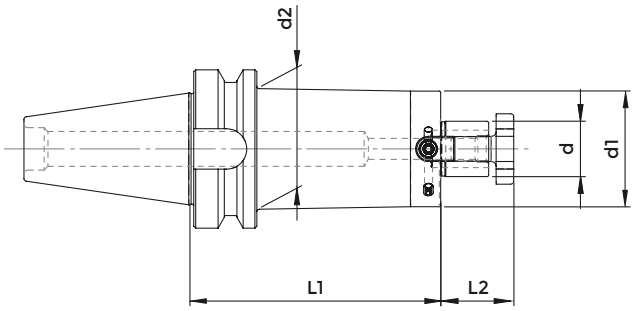

MAS 403/BT AD

COD.	DESCRIPTION	ISO	d	L1	L2	d1	d2	G6.3 8000	CROSS SCREW	TENON	SCREW	WRENCH
216-77207	BT 30 - D. 16 FISSO / H 35	30	16	35	17	38	-	•	811-107003	814-202280	811-101004	816-130002
216-77201	BT 30 - D. 22 FISSO / H 45	30	22	45	19	48	-	•	811-107004	814-202250	811-101011	816-130003
10746	BT 30 - D. 27 FISSO / H 45	30	27	45	21	58	-	•	811-107005	814-202270	811-101018	816-130004
216-77208	BT 40 - D. 16 FISSO / H 45	40	16	45	17	38	-	•	811-107003	814-202280	811-101004	816-130002
216-77214	BT 40 - D. 16 FISSO / H 100	40	16	100	17	38	-	•	811-107003	814-202280	811-101004	816-130002
216-77221	BT 40 - D. 16 FISSO / H 130	40	16	130	17	38	-	•	811-107003	814-202280	811-101004	816-130002
216-77223	BT 40 - D. 16 FISSO / H 160	40	16	160	17	38	-	•	811-107003	814-202280	811-101004	816-130002
216-77203	BT 40 - D. 22 FISSO / H 45	40	22	45	19	48	-	•	811-107004	814-202250	811-101011	816-130003
216-77204	BT 40 - D. 22 FISSO / H 60	40	22	60	19	48	-	•	811-107004	814-202250	811-101011	816-130003
216-77215	BT 40 - D. 22 FISSO / H 100	40	22	100	19	46	48	•	811-107004	814-202250	811-101011	816-130003
216-77222	BT 40 - D. 22 FISSO / H 130	40	22	130	19	46	48	•	811-107004	814-202250	811-101011	816-130003
216-77224	BT 40 - D. 22 FISSO / H 160	40	22	160	19	46	48	•	811-107004	814-202250	811-101011	816-130003
216-77205	BT 40 - D. 27 FISSO / H 45	40	27	45	21	58	-	•	811-107005	814-202160	811-101017	816-130004
10616	BT 40 - D. 27 FISSO / H 60	40	27	60	21	60	-	•	811-107005	814-202160	811-101017	816-130004
216-77216	BT 40 - D. 27 FISSO / H 100	40	27	100	21	48	-	•	811-107005	814-202160	811-101017	816-130004
216-77220	BT 40 - D. 32 FISSO / H 50	40	32	50	24	78	-	•	811-107006	814-202630	811-101029	816-130005
216-77217	BT 40 - D. 32 FISSO / H 100	40	32	100	24	58	-	•	811-107006	814-202170	811-101027	816-130005
10765	BT 40 - D. 40 FISSO / H 55	40	40	55	27	88	-	•	811-107007	814-202710	811-101029	816-130002
10766	BT 40 - D. 40 FISSO / H 100	40	40	100	27	70	-	•	811-107007	814-202180	0207	816-130002
10768	BT 50 - D. 16 FISSO / H 60	50	16	60	17	38	-	•	811-107003	814-202280	811-101004	816-130002
216-77211	BT 50 - D. 22 FISSO / H 60	50	22	60	19	48	-	•	811-107004	814-202250	811-101011	816-130003
216-77212	BT 50 - D. 27 FISSO / H 60	50	27	60	21	58	-	•	811-107005	814-202270	7414	816-130004
10787	BT 50 - D. 32 FISSO / H 60	50	32	60	24	78	-	•	811-107006	814-202630	811-101029	816-130005
10794	BT 50 - D. 40 FISSO / H 60	50	40	60	27	88	-	•	811-107007	814-202710	811-101029	816-130002

ACCESSORIES

p. 693

p. 695

p. 694

FACE MILL HOLDERS - TENONS DRIVE

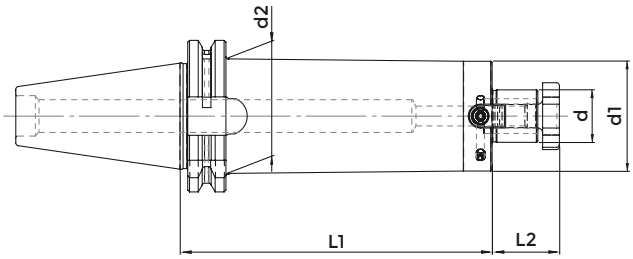

DIN 69871 AD

COD.	DESCRIPTION	ISO	d	L1	L2	d1	d2	G6.3 8000	CROSS SCREW	TENON	SCREW	WRENCH
216-77103	TC 40 - D. 16 FISSO / H 45	40	16	45	17	38	-	•	811-107003	814-202280	811-101004	816-130002
216-77107	TC 40 - D. 16 FISSO / H 100	40	16	100	17	38	-	•	811-107003	814-202280	811-101004	816-130002
216-77113	TC 40 - D. 16 FISSO / H 130	40	16	130	17	38	-	•	811-107003	814-202280	811-101004	816-130002
216-77116	TC 40 - D. 16 FISSO / H 160	40	16	160	17	38	-	•	811-107003	814-202280	811-101004	816-130002
216-77101	TC 40 - D. 22 FISSO / H 45	40	22	45	19	48	-	•	811-107004	814-202250	811-101011	816-130003
216-77108	TC 40 - D. 22 FISSO / H 100	40	22	100	19	46	48	•	811-107004	814-202250	811-101011	816-130003
216-77114	TC 40 - D. 22 FISSO / H 130	40	22	130	19	46	48	•	811-107004	814-202250	811-101011	816-130003
216-77115	TC 40 - D. 22 FISSO / H 160	40	22	160	19	46	48	•	811-107004	814-202250	811-101011	816-130003
216-77102	TC 40 - D. 27 FISSO / H 50	40	27	50	21	58	-	•	811-107005	814-202270	811-101017	816-130004
216-77109	TC 40 - D. 27 FISSO / H 100	40	27	100	21	48	-	•	811-107005	814-202160	811-101017	816-130004
216-77112	TC 40 - D. 32 FISSO / H 55	40	32	55	24	78	-	•	811-107006	814-202630	811-101029	816-130005
10240	TC 40 - D. 40 FISSO / H 55	40	40	55	27	88	-	•	811-107007	814-202710	811-101029	816-130006
216-77104	TC 50 - D. 16 FISSO / H 45	50	16	45	17	38	-	•	811-107003	814-202280	811-101004	816-130002
216-77105	TC 50 - D. 22 FISSO / H 55	50	22	55	19	48	-	•	811-107004	814-202250	811-101011	816-130003
216-77106	TC 50 - D. 27 FISSO / H 45	50	27	45	21	58	-	•	811-107005	814-202270	811-101018	816-130004
216-77117	TC 50 - D. 32 FISSO / H 55	50	32	55	24	78	-	•	811-107006	814-202630	811-101029	816-130005
216-77118	TC 50 - D. 40 FISSO / H 55	50	40	55	27	88	-	•	811-107006	814-202710	811-101029	816-130006

ACCESSORIES

p. 693

p. 695

p. 694

DOUBLE CONTACT WELDON END MILL HOLDERS

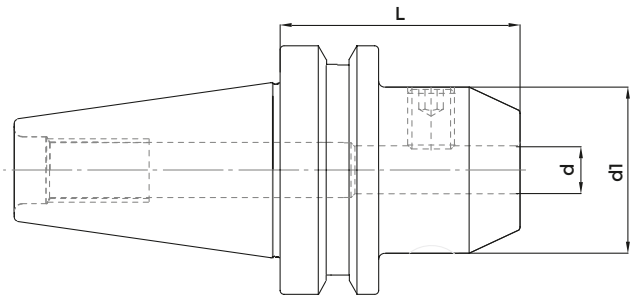

MAS 403/BT AD

COD.	DESCRIPTION	ISO	d	L	d1	G6,3 12000	SCREW
213-17225	BT 30 - WE 6 / H 60	30	6	60	25	•	811-106001
213-17226	BT 30 - WE 8 / H 60	30	8	60	28	•	811-106002
213-17227	BT 30 - WE 10 / H 60	30	10	60	35	•	811-106004
213-17228	BT 30 - WE 12 / H 60	30	12	60	42	•	811-106005
213-17229	BT 30 - WE 16 / H 75	30	16	75	48	•	811-106006
213-17230	BT 30 - WE 20 / H 70	30	20	70	52	•	811-106007
213-17231	BT 30 - WE 25 / H 90	30	25	90	65	•	811-106008
213-17232	BT 40 - WE 6 / H 50	40	6	50	25	•	811-106001
213-17233	BT 40 - WE 8 / H 50	40	8	50	28	•	811-106002
213-17234	BT 40 - WE 10 / H 63	40	10	63	35	•	811-106004
213-17235	BT 40 - WE 12 / H 63	40	12	63	42	•	811-106005
213-17236	BT 40 - WE 16 / H 63	40	16	63	48	•	811-106006
10668	BT 40 - WE 16 / H 100	40	16	100	48	•	811-106006
213-17238	BT 40 - WE 20 / H 63	40	20	63	52	•	811-106007
213-17248	BT 40 - WE 20 / H 100	40	20	100	52	•	811-106007
213-17239	BT 40 - WE 25 / H 90	40	25	90	65	•	811-106008
213-17240	BT 40 - WE 32 / H 100	40	32	100	72	•	811-106009
10690	BT 40 - WE 40 / H 105	40	40	105	80	•	811-106009

DOUBLE CONTACT WELDON END MILL HOLDERS

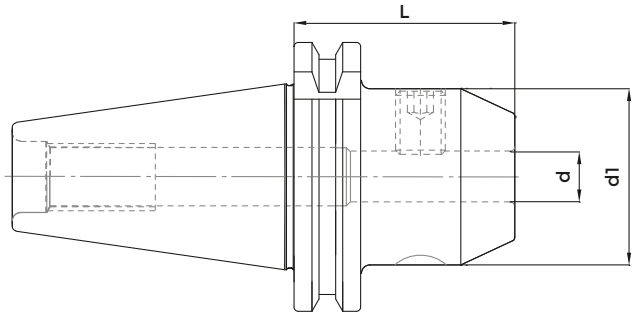

DIN 69871 AD

COD.	DESCRIPTION	ISO	d	L	d1	G6,3 12000	SCREW
213-17113	TC 40 - WE 6 / H 50	40	6	50	25	•	811-106001
10122	TC 40 - WE 6 / H 100	40	6	100	28	•	811-106002
213-17114	TC 40 - WE 8 / H 50	40	8	50	28	•	811-106002
10127	TC 40 - WE 8 / H 100	40	8	100	28	•	811-106002
213-17115	TC 40 - WE 10 / H 50	40	10	50	35	•	811-106004
10132	TC 40 - WE 10 / H 100	40	10	100	35	•	811-106004
213-17116	TC 40 - WE 12 / H 50	40	12	50	42	•	811-106005
10137	TC 40 - WE 12 / H 100	40	12	100	42	•	811-106005
213-17117	TC 40 - WE 16 / H 63	40	16	63	48	•	811-106006
213-17119	TC 40 - WE 20 / H 63	40	20	63	52	•	811-106007
213-17120	TC 40 - WE 25 / H 100	40	25	100	65	•	811-106008
213-17121	TC 40 - WE 32 / H 100	40	32	100	72	•	811-106009
213-17132	TC 40 - WE 40 / H 115	40	40	115	80	•	811-106009
213-17126	TC 50 - WE 16 / H 63	50	16	63	48	•	811-106006
213-17128	TC 50 - WE 20 / H 63	50	20	63	52	•	811-106007
213-17129	TC 50 - WE 25 / H 80	50	25	80	65	•	811-106008
213-17130	TC 50 - WE 32 / H 100	50	32	100	72	•	811-106009
213-17131	TC 50 - WE 40 / H 120	50	40	120	80	•	811-106009

READY, ALWAYS.

POLYGONAL TOOLHOLDERS AND TURNING TOOLS FOR MILLING

DIN ISO 26623-1

POLYGONAL SHANKS DATA SHEET

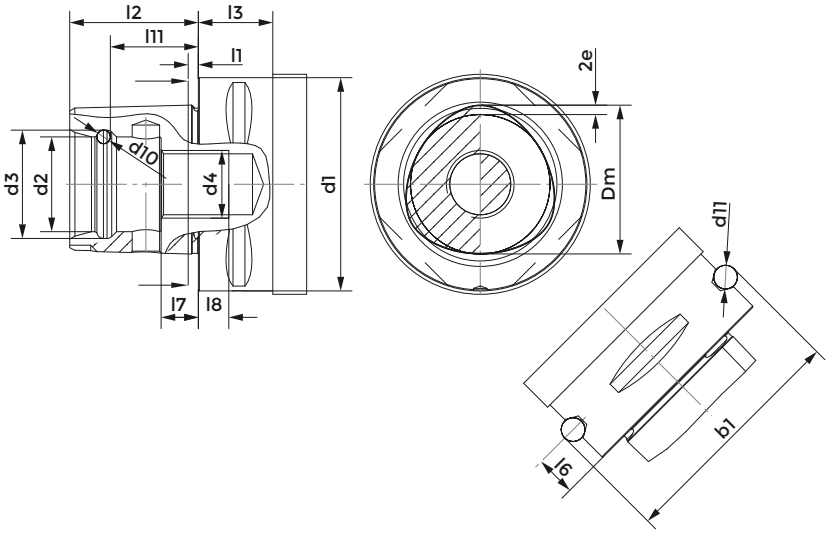

DIN ISO 26623-1

	C32	C40	C50	C63	C80	C80X	C100
b1	39	46	59,3	70,7	86	110	110
d1	32	40	50	63	80	100	100
d2	15	18	21	28	32	32	43
d3	16,5	20	24	32	38	38	50,5
d4	M12x1,5	M14x1,5	M16x1,5	M20x2	M20x2	M20x2	M24x2
d10	1,5	2	3	4	6	6	7,5
d11	5	5	7	7	7	10	10
Dm	22	28	35	44	55	55	72
e	0,7	0,9	1,12	1,4	2	2	2,8
l1	2,5	2,5	3	3	3	3	3
l2	19	24	30	38	48	48	60
l3	15	20	20	22	30	32	36
l6	6	8	10	12	12	16	16
l7	6	9	10	11	20	20	20
l8	6	6	7	9	0	0	10
l11	13,5	17,5	22	26	34	34	42,5

POLYGONAL END MILL HOLDER WELDON

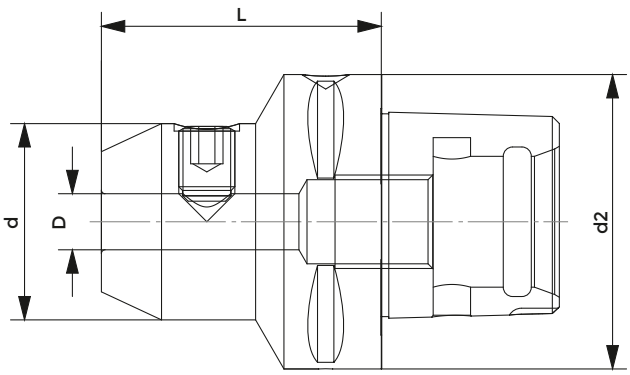

DIN ISO 26623-1

COD.	POLYGONAL	d2	d	D	L	G6.3 12000	SCREW
C40H50WE06	C40	40	25	6	50	•	811-106001
C40H50WE08	C40	40	28	8	50	•	811-106002
C40H50WE10	C40	40	35	10	50	•	811-106004
C40H55WE12	C40	40	42	12	55	•	811-106005
C40H55WE16	C40	40	48	16	55	•	811-106006
C50H55WE06	C50	50	25	6	55	•	811-106001
C50H55WE08	C50	50	28	8	55	•	811-106002
C50H65WE10	C50	50	35	10	65	•	811-106004
C50H65WE12	C50	50	42	12	65	•	811-106005
C50H65WE14	C50	50	42	14	65	•	811-106005
C50H65WE16	C50	50	48	16	65	•	811-106006
C50H65WE20	C50	50	52	20	65	•	811-106007
C50H80WE25	C50	50	65	25	80	•	811-106008
C63H55WE06	C63	63	25	6	55	•	811-106001
C63H55WE08	C63	63	28	8	55	•	811-106002
C63H60WE10	C63	63	35	10	60	•	811-106004
C63H60WE12	C63	63	42	12	60	•	811-106005
C63H60WE14	C63	63	44	14	60	•	811-106005
C63H65WE16	C63	63	48	16	65	•	811-106006
C63H65WE20	C63	63	52	20	65	•	811-106007
C63H80WE25	C63	63	64	25	80	•	811-106008
C63H90WE32	C63	63	72	32	90	•	811-106009
C80H70WE06	C80	80	25	6	70	•	811-106001
C80H70WE08	C80	80	28	8	70	•	811-106002
C80H70WE10	C80	80	35	10	70	•	811-106004
C80H70WE12	C80	80	42	12	70	•	811-106005
C80H70WE16	C80	80	48	16	70	•	811-106006
C80H70WE20	C80	80	50	20	70	•	811-106007
C80H80WE25	C80	80	52	25	80	•	811-106008
C80H80WE32	C80	80	72	32	80	•	811-106009
C80H110WE40	C80	80	80	40	110	•	811-106009

POLYGONAL INDEXABLE DRILL HOLDER

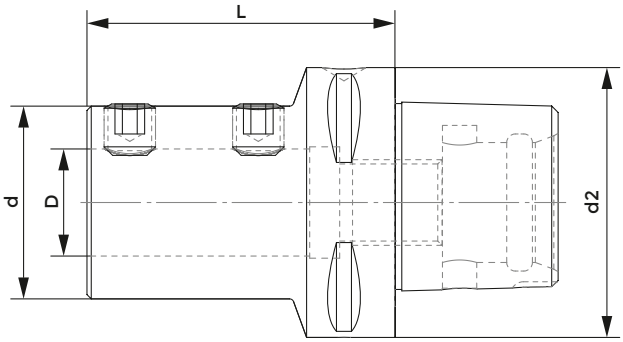

DIN ISO 26623-1

COD.	POLYGONAL	d	D	d2	L	G6.3 12000
C40H56D16PNT	C40	36	16	40	56	•
C40H60D20PNT	C40	40	20	40	60	•
C40H77D25PNT	C40	45	25	40	77	•
C50H52D08PNT	C50	44	8	50	52	•
C50H52D10PNT	C50	44	10	50	52	•
C50H52D12PNT	C50	44	12	50	52	•
C50H65D16PNT	C50	44	16	50	65	•
C50H60D20PNT	C50	44	20	50	60	•
C50H70D25PNT	C50	44	25	50	70	•
C63H60D08PNT	C63	44	8	63	60	•
C63H60D10PNT	C63	44	10	63	60	•
C63H60D12PNT	C63	44	12	63	60	•
C63H70D16PNT	C63	36	16	63	70	•
C63H70D20PNT	C63	40	20	63	70	•
C63H72D25PNT	C63	45	25	63	72	•
C63H75D32PNT	C63	52	32	63	75	•
C63H85D40PNT	C63	63	40	63	85	•
C80H80D20PNT	C80	40	20	80	80	•
C80H85D25PNT	C80	45	25	80	85	•
C80H90D32PNT	C80	52	32	80	90	•
C80H95D40PNT	C80	65	40	80	95	•

POLYGONAL FACE MILL HOLDER

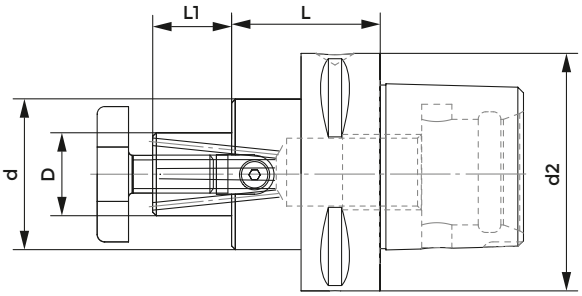

DIN ISO 26623-1

COD.	POLYGONAL	d2	d	D	L	L1	G6.3 8000	CROSS SCREW	TENON A	SCREW A	TENON B	SCREW B
C40H32D16	C40	40	32	16	32	17	•	811-107003	-	-	814-20214	811-101002
C40H25D22	C40	40	40	22	25	19	•	811-107004	-	-	814-20215	811-101010
C50H32D22	C50	50	48	22	32	19	•	811-107004	814-202250	811-101011	-	-
C50H60D22	C50	50	48	22	60	19	•	811-107004	814-202250	811-101011	-	-
C50H60D27	C50	50	58	27	60	21	•	811-107005	814-202270	811-101018	-	-
C63H40D16	C63	63	32	16	40	17	•	811-107003	-	-	814-20214	811-101002
C63H63D16	C63	63	38	16	63	17	•	811-107003	814-202280	811-101004	-	-
C63H25D22	C63	63	55	22	25	19	•	811-107004	814-202250	811-101011	-	-
C63H100D22	C63	63	48	22	100	19	•	811-107004	814-202250	811-101011	-	-
C63H25D27	C63	63	63	27	25	21	•	811-107005	814-202270	811-101018	-	-
C63H100D27	C63	63	58	27	100	21	•	811-107005	814-202270	811-101018	-	-
C63H25D32	C63	63	63	32	25	24	•	811-107006	-	-	814-20217	811-101027
C63H100D32	C63	63	63	32	100	24	•	811-107006	-	-	814-20217	811-101027
C63H40D40	C63	63	89	40	40	27	•	811-107007	814-202710	811-101029	-	-
C63H100D40	C63	63	70	40	100	27	•	811-107007	-	-	814-20218	811-101028
C80H50D16	C80	80	32	16	50	17	•	811-107003	-	-	814-20214	811-101002
C80H100D16	C80	80	38	16	100	17	•	811-107003	814-202280	811-101004	-	-
C80H30D22	C80	80	55	22	30	19	•	811-107004	814-202250	811-101011	-	-
C80H100D22	C80	80	48	22	100	19	•	811-107004	814-202250	811-101011		
C80H30D27	C80	80	65	27	30	21	•	811-107005	814-202270	811-101018	-	-
C80H100D27	C80	80	58	27	100	21	•	811-107005	814-202270	811-101018	-	-
C80H30D32	C80	80	79	32	30	24	•	811-107006	814-202630	811-101029	-	-
C80H100D32	C80	80	63	32	100	24	•	811-107006	-	-	814-20217	811-101027
C80H30D40	C80	80	80	40	30	27	•	811-107007	-	-	814-20218	811-101028
C80H100D40	C80	80	70	40	100	27	•	811-107007	-	-	814-20218	811-101028

ACCESSORIES

p. 693

p. 695

p. 694

MILLING CUTTER ARBORS FOR SCREW-ON TYPE MILLING CUTTERS

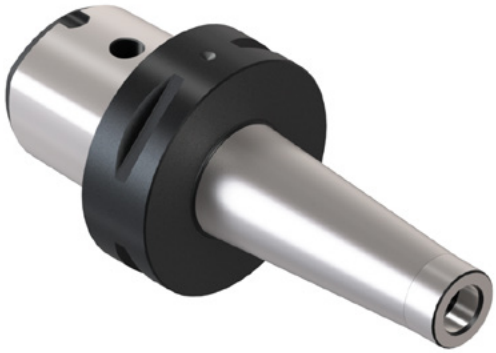

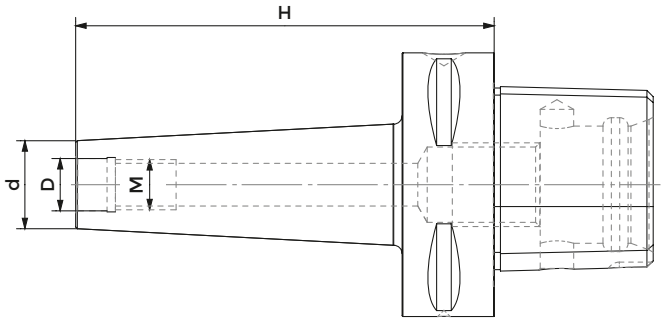

DIN ISO 26623-1

COD.	POLYGONAL	M	D	d	H	G6.3 12000
C63H90M10	C63	M10	10.5	18	90	•
C63H100M12	C63	M12	12.5	21	100	•
C63H100M16	C63	M16	17	29	100	•
C80H90M10	C80	M10	10,5	18	90	•
C80H100M12	C80	M12	12,5	21	100	•
C80H100M16	C80	M16	17	29	100	•

POLYGONAL MORSE TAPER ADAPTORS FOR DRILLS

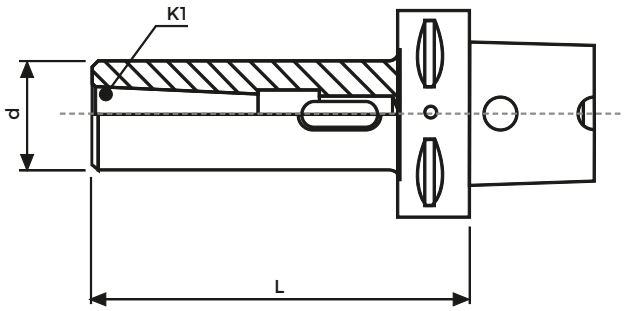

DIN ISO 26623-1

COD.	POLYGONAL	d	K1	L	G6.3 8000
C50H110CM2P	C50	32	MK2	110	•
C50H130CM3P	C50	40	MK3	130	•
C63H110CM2P	C63	32	MK2	110	•
C63H130CM3P	C63	40	MK3	130	•
C63H150CM4P	C63	52	MK4	150	•
C80H170CM4P	C80	52	MK4	170	•
C80H200CM5P	C80	63	MK5	200	•

POLYGONAL REDUCTION

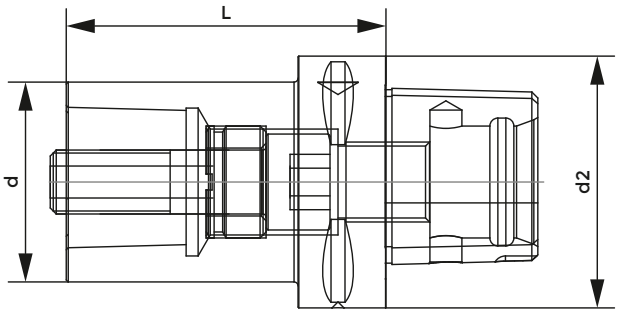

DIN ISO 26623-1

COD.	POLYGONAL	d2	d	L
C40H55C32	C40	40	32	55
C50H65C40	C50	50	40	65
C50H85C40	C50	50	40	85
C63H80C40	C63	63	40	80
C63H80C50	C63	63	50	80
C80H120C50	C80	80	50	120
C80H80C63	C80	80	63	80
C80H110C63	C80	80	63	110

POLYGONAL EXTENSIONS

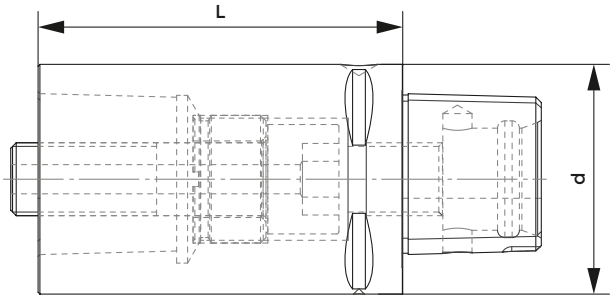

DIN ISO 26623-1

COD.	POLYGONAL	d	L
C32H60C32	C32	32	60
C40H40C40	C40	40	40
C40H60C40	C40	40	60
C40H80C40	C40	40	80
C50H50C50	C50	50	50
C50H80C50	C50	50	80
C50H100C50	C50	50	100
C63H60C63	C63	63	60
C63H100C63	C63	63	100
C63H140C63	C63	63	140
C80H65C80	C80	80	65
C80H100C80	C80	80	100
C80H125C80	C80	80	125

ER MINI COLLET CHUCK

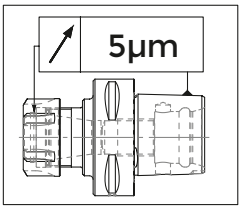

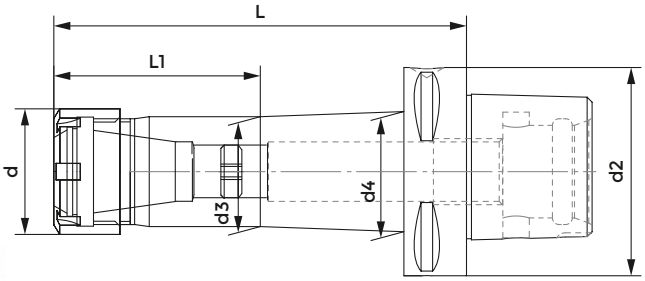

H= 0 > 100 mm - 5 µm
H= 100 > 200 mm - 10 µm

DIN ISO 26623-1

COD.	POLYGONAL	ER	d2	d	L	L1	d3	d4	G6.3 15000	NUT	SCREW
C50H100ER11M	C50	11M	50	16	100	40	14	20	•	812-203012	811-303081
C50H100ER16M	C50	16M	50	22	100	42	20	25	•	812-203013	811-303119
C50H100ER20M	C50	20M	50	28	100	48	26	30	•	812-203014	811-303120
C50H100ER25M	C50	25M	50	35	100	-	33	-	•	812-203015	811-303121
C63H100ER11M	C63	11M	63	16	100	40	14	20	•	812-203012	811-303081
C63H160ER11M	C63	11M	63	16	160	50	14	23	•	812-203012	811-303081
C63H60ER16M	C63	16M	50	22	60	30	19	19	•	812-203013	811-303119
C63H100ER16M	C63	16M	63	22	100	42	20	25	•	812-203013	811-303119
C63H160ER16M	C63	16M	63	22	160	97	20	26	•	812-203013	811-303119
C63H100ER20M	C63	20M	63	28	100	48	26	30	•	812-203014	811-303120
C63H160ER20M	C63	20M	63	28	160	98	26	31	•	812-203014	811-303120
C63H100ER25M	C63	25M	63	35	100	-	33	-	•	812-203015	811-303121
C63H160ER25M	C63	25M	63	35	160	103	33	35	•	812-203015	811-303121
C80H160ER25M	C80	25M	80	35	160	68	33	46	•	812-203015	811-303121

ACCESSORIES

p. 648

p. 631

p. 652

POLYGONAL ER COLLET CHUCK

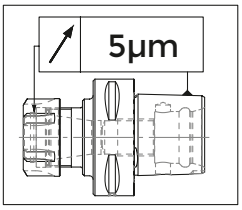

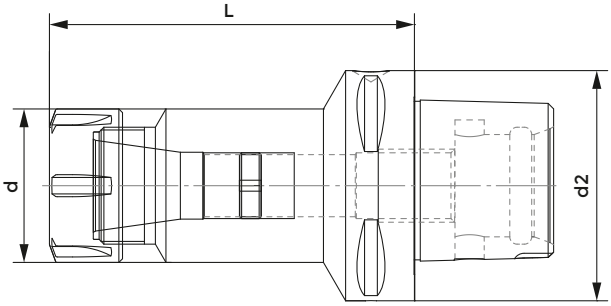

H= 0 > 100 mm - 5 µm
H= 100 > 200 mm - 10 µm

DIN ISO 26623-1

COD.	POLYGONAL	ER	d2	d	L	G6.3 15000	NUT	SCREW
C40H70ER16	C40	ER16	40	32	70	•	812-203005	811-303119
C40H52ER25	C40	ER25	40	42	52	•	812-203001	811-303121
C40H54ER32	C40	ER32	40	50	54	•	812-203002	811-303118
C50H60ER16	C50	ER16	50	32	60	•	812-203005	811-303119
C50H100ER16	C50	ER16	50	32	100	•	812-203005	811-303119
C50H60ER20	C50	ER20	50	35	60	•	812-203006	811-303120
C50H60ER25	C50	ER25	50	42	60	•	812-203001	811-303121
C50H100ER25	C50	ER25	50	42	100	•	812-203001	811-303121
C50H60ER32	C50	ER32	50	50	60	•	812-203002	811-303118
C50H100ER32	C50	ER32	50	50	100	•	812-203002	811-303118
C50H65ER40	C50	ER40	50	63	65	•	812-203003	811-303122
C50H100ER40	C50	ER40	50	63	100	•	812-203003	811-303122
C63H60ER16	C63	ER16	63	32	60	•	812-203005	811-303119
C63H100ER16	C63	ER16	63	32	100	•	812-203005	811-303119
C63H60ER20	C63	ER20	63	35	60	•	812-203006	811-303120
C63H100ER20	C63	ER20	63	35	100	•	812-203006	811-303120
C63H60ER25	C63	ER25	63	42	60	•	812-203001	811-303121
C63H100ER25	C63	ER25	63	42	100	•	812-203001	811-303121
C63H60ER32	C63	ER32	63	50	60	•	812-203002	811-303118
C63H100ER32	C63	ER32	63	50	100	•	812-203002	811-303118
C63H70ER40	C63	ER40	63	63	70	•	812-203003	811-303122
C63H130ER40	C63	ER40	63	63	130	•	812-203003	811-303122
C80H70ER25	C80	ER25	80	42	70	•	812-203001	811-303121
C80H160ER25	C80	ER25	80	42	160	•	812-203001	811-303121
C80H70ER32	C80	ER32	80	50	70	•	812-203002	811-303118
C80H160ER32	C80	ER32	80	50	160	•	812-203002	811-303118
C80H70ER40	C80	ER40	80	63	70	•	812-203003	811-303122
C80H160ER40	C80	ER40	80	63	160	•	812-203003	811-303122

ACCESSORIES

p. 649

p. 631

p. 653

POLYGONAL HIGH TORQUE MILLING CHUCK

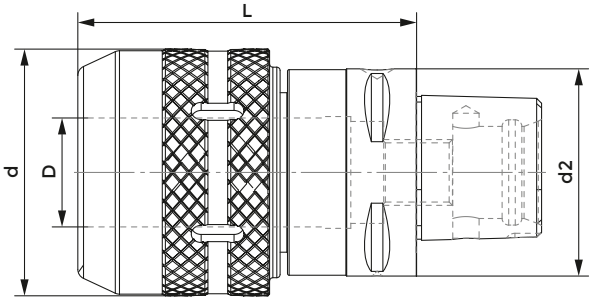

DIN ISO 26623-1

COD.	POLYGONAL	d2	d	D	L	G6.3 12000
C50H75C20	C50	50	54	20	75	•
C63H80C20	C63	63	54	20	80	•
C63H100C32	C63	63	72	32	100	•

Suitable wrench included in delivery

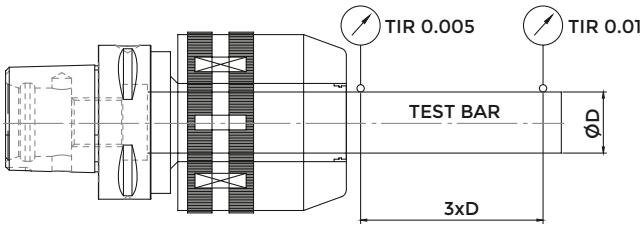

ACCESSORIES

p. 707

POLYGONAL TAPPING HEAD

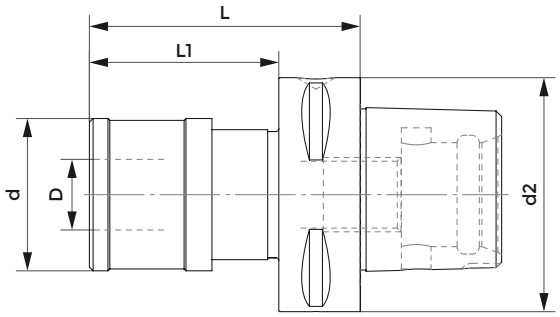

DIN ISO 26623-1

COD.	POLYGONAL	d2	d	D	L	L1	TAP SIZE RANGE
							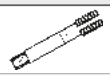
C40GR1	C40	40	41	19	68	48	M3-M12
C50H68GR1	C50	50	41	19	68	48	M3-M12
C50H91GR2	C50	50	60	31	91	71	M6-M20
C63GR1	C63	63	41	19	73	51	M3-M12
C63GR2	C63	63	60	31	97	75	M6-M20
C63H146GR3	C63	63	86	48	146	124	M14-M33
C80GR1	C80	80	41	19	75	45	M3-M12
C80GR2	C80	80	60	31	93,5	63,5	M6-M20
C80GR3	C80	80	86	48	137	107	M14-M33

POLYGONAL BLANK TOOLHOLDER

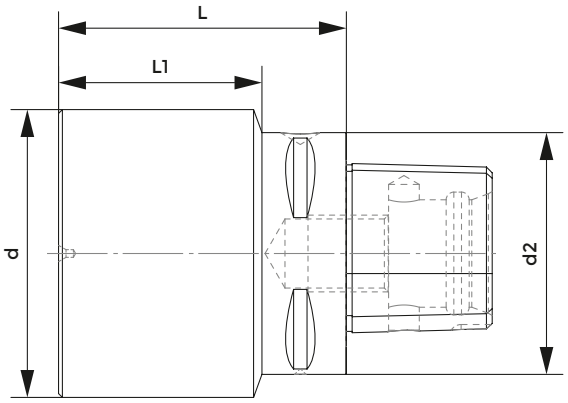

DIN ISO 26623-1

HRC 26-28

COD.	POLYGONAL	d2	d	L	L1
C40H165D63	C40	40	63	165	145
C50H150D50	C50	50	50	150	-
C50H150D91	C50	50	91	150	130
C63H180D63	C63	63	63	180	-
C63H195D75	C63	63	75	195	173
C63H180D120	C63	63	120	180	158
C63H100D115	C63	63	115	100	78
C63H75D91	C63	63	91	75	53
C63H76D63,5	C63	63	63,5	76	54
C80H200D80	C80	80	80	200	-
C80H140D110	C80	80	110	140	110
C80H160D115	C80	80	115	160	130
C80H70D80	C80	80	80	70	-

EXTENSION ADAPTOR WITH QUICK CHANGE POLYGONAL SHANK ACCORDING

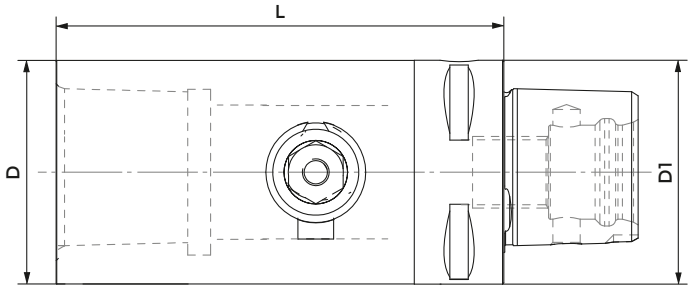

DIN ISO 26623-1

COD.	POLYGONAL	SHANK	d	d1	L	MAX. (Rpm)
C40H85C40-CR	C40	C40	40	40	85	39000
C50H100C50-CR	C50	C50	50	50	100	28000
C63H115C63-CR	C63	C63	63	63	115	20000
C80H145C80-CR	C80	C80	80	80	145	14000

REDUCTION ADAPTOR WITH QUICK CHANGE POLYGONAL SHANK ACCORDING

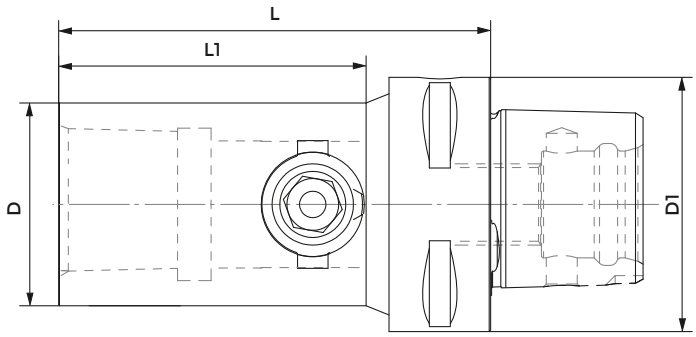

DIN ISO 26623-1

COD.	POLYGONAL	SHANK	d	d1	L	L1	MAX. (Rpm)
C50H85C40-CR	C50	C40	50	40	85	60,5	28000
C63H100C50-CR	C63	C50	63	50	100	73	20000
C80H120C63-CR	C80	C63	80	63	120	84,5	14000

INSTRUCTIONS TO CLAMPING TOOL HOLDER WITH QUICK CHANGE ADAPTERS WITH POLYGONAL SHANK ISO26623

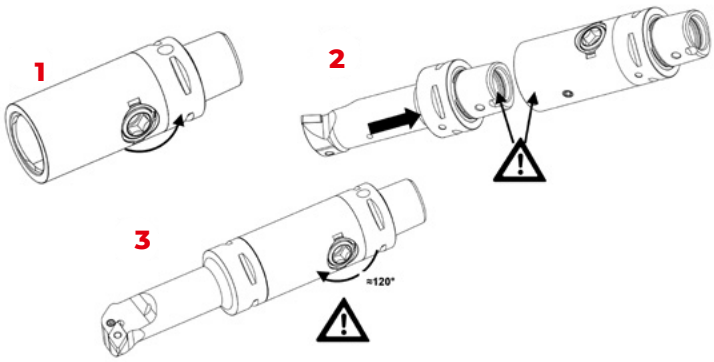

TOOLSIDE	TORQUE (Nm)
PSC40	50Nm
PSC50	70Nm
PSC63	90Nm
PSC80	130Nm

READY, ALWAYS.

SHRINK FIT CHUCKS

SHRINK FIT CHUCKS
ISO 40 DIN 69871 AD/B

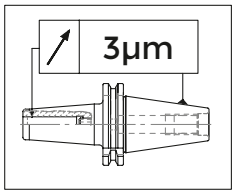

H= 0 > 100 mm - 3 µm
H= 100 >200 mm - 5 µm

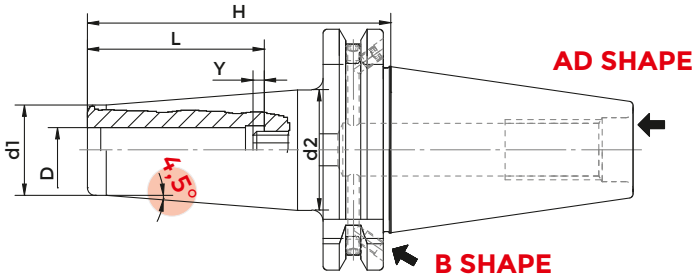

DIN 69871 AD/B

4,5° PROGRAM

COD.	DESCRIPTION	ISO	D	H	L	Y max	d1	d2	G2,5 25000
251-11232	TC40H80K03-HTT	40	3	80	22	10	9	16	•
251-11225	TC40H80K04-HTT	40	4	80	26	10	10	17	•
251-11233	TC40H80K05-HTT	40	5	80	30	10	11	18	•
251-11201	TC40H80K06-HTT	40	6	80	36	10	21	27	•
251-11202	TC40H80K08-HTT	40	8	80	36	10	21	27	•
251-11203	TC40H80K10-HTT	40	10	80	42	10	24	32	•
251-11204	TC40H80K12-HTT	40	12	80	47	10	24	32	•
251-11206	TC40H80K14-HTT	40	14	80	47	10	27	34	•
251-11205	TC40H80K16-HTT	40	16	80	50	10	27	34	•
251-11207	TC40H80K18-HTT	40	18	80	50	10	33	42	•
251-11208	TC40H80K20-HTT	40	20	80	52	10	33	42	•
251-11218	TC40H100K25-HTT	40	25	100	58	10	44	53	•
251-11295	TC40H120K03-HTT	40	3	120	22	10	9	16	•
251-11296	TC40H120K04-HTT	40	4	120	26	10	10	17	•
251-11297	TC40H120K05-HTT	40	5	120	30	10	11	18	•
251-11209	TC40H120K06-HTT	40	6	120	36	10	21	27	•
251-11210	TC40H120K08-HTT	40	8	120	36	10	21	27	•
251-11211	TC40H120K10-HTT	40	10	120	42	10	24	32	•
251-11212	TC40H120K12-HTT	40	12	120	47	10	24	32	•
251-11298	TC40H120K16-HTT	40	16	120	50	10	27	34	•

SHRINK FIT CHUCKS ISO 40
DIN 69871 AD/B

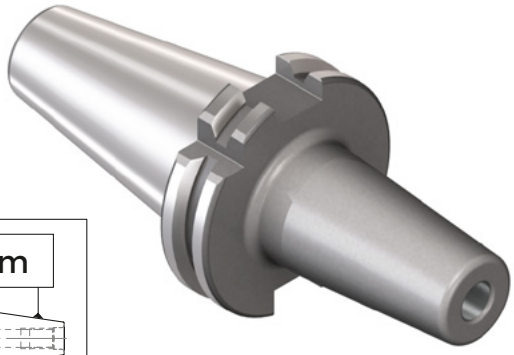

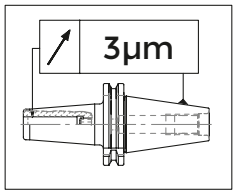

H= 0 > 100 mm - 3 µm
H= 100 >200 mm - 5 µm

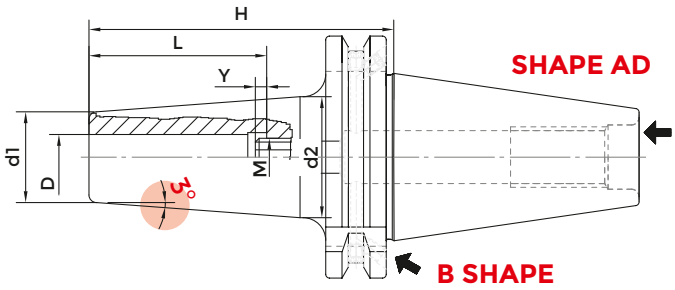

DIN69871 AD/B

3° PROGRAM

COD.	DESCRIPTION	ISO	D	H	L	Y max	d1	d2	G2,5 25000
251-21284	TC40H80K03-HTT	40	3	80	22	10	9	15	•
251-21285	TC40H80K04-HTT	40	4	80	26	10	10	16	•
251-21287	TC40H80K06-HTT	40	6	80	30	10	12	18	•
251-21288	TC40H80K08-HTT	40	8	80	36	10	14	20	•
251-21289	TC40H80K10-HTT	40	10	80	41	10	16	22	•
251-21290	TC40H80K12-HTT	40	12	80	47	10	18	24	•
251-21292	TC40H80K16-HTT	40	16	80	50	10	24	30	•
251-21295	TC40H120K03-HTT	40	3	120	22	-	9	19	•
251-21296	TC40H120K04-HTT	40	4	120	26	-	10	20	•
251-21298	TC40H120K06-HTT	40	6	120	30	10	12	22	•
251-21299	TC40H120K08-HTT	40	8	120	36	10	14	24	•
251-31201	TC40H120K10-HTT	40	10	120	42	10	16	26	•
251-31202	TC40H120K12-HTT	40	12	120	47	10	18	28	•
251-31204	TC40H120K16-HTT	40	16	120	47	10	24	34	•
251-31207	TC40H160K03-HTT	40	3	160	22	-	9	23	•
251-31208	TC40H160K04-HTT	40	4	160	26	-	10	24	•
251-31210	TC40H160K06-HTT	40	6	160	30	10	12	26	•
251-31211	TC40H160K08-HTT	40	8	160	36	10	14	28	•
251-31212	TC40H160K10-HTT	40	10	160	42	10	16	30	•
251-31213	TC40H160K12-HTT	40	12	160	47	10	18	32	•
251-31215	TC40H160K16-HTT	40	16	160	50	10	24	38	•
251-31217	TC40H160K20-HTT	40	20	160	52	10	26	38	•

SHRINK FIT CHUCKS WITH RESEALABLE COOLANT DUCT HOLES ISO 40 DIN 69871 AD/B

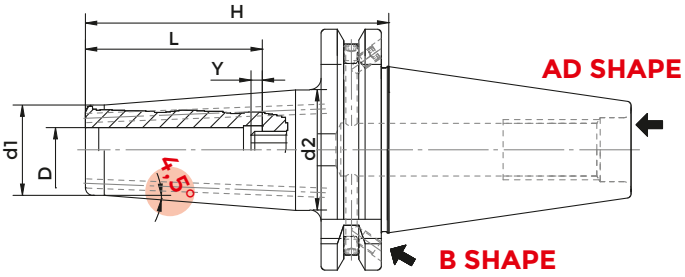

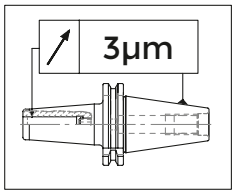

H= 0 > 100 mm - 3 µm
H= 100 >200 mm - 5 µm

DIN69871 AD/B

4,5° PROGRAM

COD.	DESCRIPTION	ISO	D	H	L	Y max	d1	d2	G2,5 25000
251-31221	TC40H80K06-HTT I.C.	40	6	80	36	10	21	27	•
251-31222	TC40H80K08-HTT I.C.	40	8	80	36	10	21	27	•
251-31223	TC40H80K10-HTT I.C.	40	10	80	42	10	24	32	•
251-31224	TC40H80K12-HTT I.C.	40	12	80	47	10	24	32	•
251-31225	TC40H80K14-HTT I.C.	40	14	80	47	10	27	34	•
251-31226	TC40H80K16-HTT I.C.	40	16	80	50	10	27	34	•
251-31227	TC40H80K18-HTT I.C.	40	18	80	50	10	33	42	•
251-31228	TC40H80K20-HTT I.C.	40	20	80	52	10	33	42	•
251-31229	TC40H100K25-HTT I.C.	40	25	100	58	10	44	53	•
251-31230	TC40H100K32-HTT I.C.	40	32	100	63	10	44	53	•
251-31231	TC40H120K06-HTT I.C.	40	6	120	36	10	21	27	•
251-31232	TC40H120K08-HTT I.C.	40	8	120	36	10	21	27	•
251-31233	TC40H120K10-HTT I.C.	40	10	120	42	10	24	32	•
251-31234	TC40H120K12-HTT I.C.	40	12	120	47	10	24	32	•
251-31235	TC40H120K14-HTT I.C.	40	14	120	47	10	27	34	•
251-31236	TC40H120K16-HTT I.C.	40	16	120	50	10	27	34	•
251-31237	TC40H120K18-HTT I.C.	40	18	120	50	10	33	42	•
251-31238	TC40H120K20-HTT I.C.	40	20	120	52	10	33	42	•

SHRINK FIT CHUCKS ISO 50 DIN 69871 AD/B

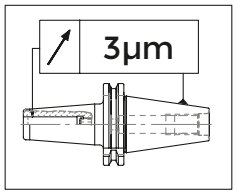

H= 0 > 100 mm - 3 µm
H= 100 >200 mm - 5 µm

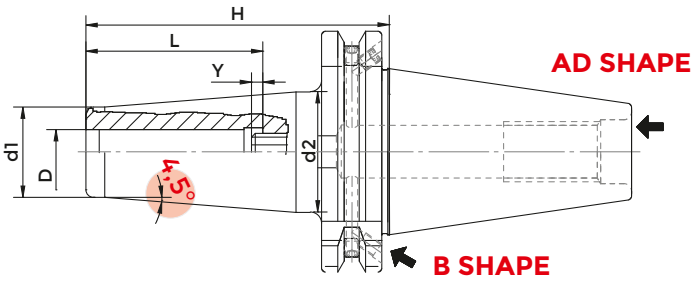

DIN69871 AD/B

4,5° PROGRAM

COD.	DESCRIPTION	ISO	D	H	L	Y max	d1	d2	G2,5 25000
251-21252	TC50H80K04-HTT	50	4	80	-	-	10	19	•
251-11234	TC50H80K06-HTT	50	6	80	36	10	21	27	•
251-11235	TC50H80K08-HTT	50	8	80	36	10	21	27	•
251-11236	TC50H80K10-HTT	50	10	80	42	10	24	32	•
251-11237	TC50H80K12-HTT	50	12	80	47	10	24	32	•
251-11224	TC50H80K16-HTT	50	16	80	50	10	27	34	•
251-11242	TC50H120K06-HTT	50	6	120	36	10	21	27	•
251-11243	TC50H120K08-HTT	50	8	120	36	10	21	27	•
251-11244	TC50H120K10-HTT	50	10	120	42	10	24	32	•
251-11245	TC50H120K12-HTT	50	12	120	47	10	24	32	•
251-11247	TC50H120K16-HTT	50	16	120	50	10	27	34	•
251-11249	TC50H120K20-HTT	50	20	120	52	10	33	42	•
251-21263	TC50H160K06-HTT	50	6	160	36	10	21	27	•
251-21264	TC50H160K08-HTT	50	8	160	36	10	21	27	•
251-21265	TC50H160K10-HTT	50	10	160	42	10	24	32	•
251-21266	TC50H160K12-HTT	50	12	160	47	10	24	32	•
251-21268	TC50H160K16-HTT	50	16	160	50	10	27	34	•
251-21270	TC50H160K20-HTT	50	20	160	52	10	33	42	•

SHRINK FIT CHUCKS MAS BT40 TIPO AD/B

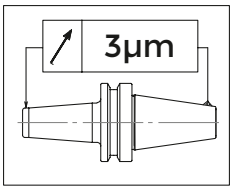

H= 0 > 100 mm - 3 µm
H= 100 >200 mm - 5 µm

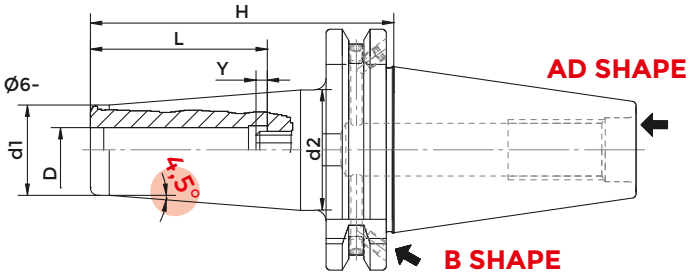

JIS-B 6499 MAS 403 BT-AD/B — 4,5° PROGRAM

COD.	DESCRIPTION	ISO	D	H	L	Y max	d1	d2	G2,5 25000
251-11580	BT40H90K03DK-HTT	40	3	90	22	10	9	16	•
251-11581	BT40H90K04DK-HTT	40	4	90	26	10	10	17	•
251-11501	BT40H90K06DK-HTT	40	6	90	37	10	21	27	•
251-11502	BT40H90K08DK-HTT	40	8	90	37	10	21	27	•
251-11503	BT40H90K10DK-HTT	40	10	90	41	10	24	32	•
251-11504	BT40H90K12DK-HTT	40	12	90	47	10	24	32	•
251-11506	BT40H90K16DK-HTT	40	16	90	50	10	27	34	•
251-11508	BT40H90K20DK-HTT	40	20	90	52	10	33	42	•

SHRINK FIT CHUCKS MAS BT40 TIPO AD/B

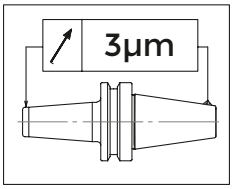

H= 0 > 100 mm - 3 µm
H= 100 >200 mm - 5 µm

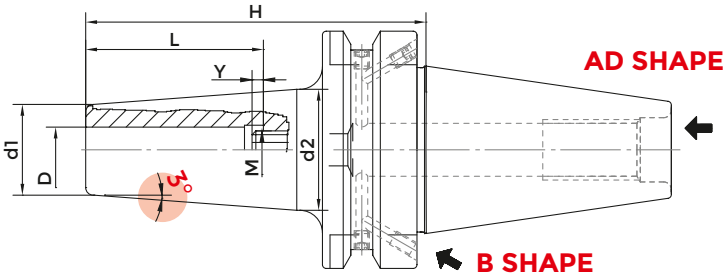

JIS-B 6339 MAS 403 BT-AD/B — 3° PROGRAM

COD.	DESCRIPTION	ISO	D	H	L	Y max	d1	d2	G2,5 25000
251-21557	BT40H120K03-HTT	40	3	120	12	-	9	16	•
251-21558	BT40H120K04-HTT	40	4	120	16	-	10	17	•
251-21560	BT40H120K06-HTT	40	6	120	37	10	12	21	•
251-21561	BT40H120K08-HTT	40	8	120	37	10	14	23	•
251-21562	BT40H120K10-HTT	40	10	120	41	10	16	25	•
251-21563	BT40H120K12-HTT	40	12	120	47	10	18	27	•
251-21565	BT40H120K16-HTT	40	16	120	50	10	22	31	•
251-21567	BT40H120K20-HTT	40	20	120	52	10	26	35	•

DOUBLE CONTACT SHRINK FIT CHUCKS WITH RESEALABLE COOLANT DUCT HOLES MAS BT40 TIPO AD/B

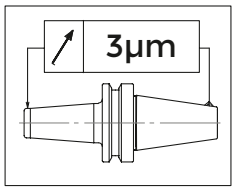

H= 0 > 100 mm - 3 µm
H= 100 >200 mm - 5 µm

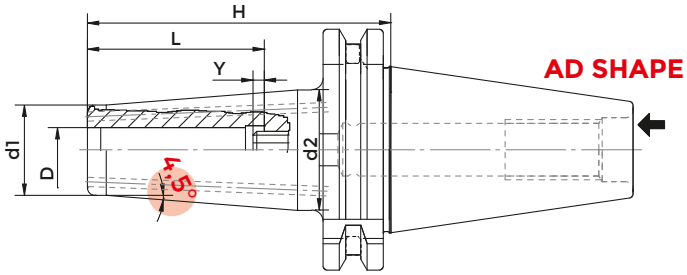

JIS-B 6499 MAS 403 BT-AD - MAS BT AD

4,5° PROGRAM

COD.	DESCRIPTION	ISO	D	H	L	Y max	d	d1	G2,5 25000
251-21595	BT40H90K06DK-HTT.-I.C.	40	6	90	37	10	21	27	•
251-21596	BT40H90K08DK-HTT-I.C.	40	8	90	37	10	21	27	•
251-21597	BT40H90K10DK-HTT-I.C.	40	10	90	41	10	24	32	•
251-21598	BT40H90K12DK-HTT-I.C.	40	12	90	47	10	24	32	•
251-21599	BT40H90K16DK-HTT-I.C.	40	16	90	50	10	27	34	•
251-21603	BT40H120K06DK-HTT.-I.C.	40	6	120	37	10	21	27	•
251-21604	BT40H120K08DK-HTT-I.C.	40	8	120	37	10	21	27	•
251-21605	BT40H120K10DK-HTT-I.C.	40	10	120	41	10	24	32	•
251-21606	BT40H120K12DK-HTT-I.C.	40	12	120	47	10	24	32	•
251-21607	BT40H120K16DK-HTT-I.C.	40	16	120	50	10	27	34	•

SHRINK FIT CHUCKS
HSK 63 DIN 69893 TIPO A

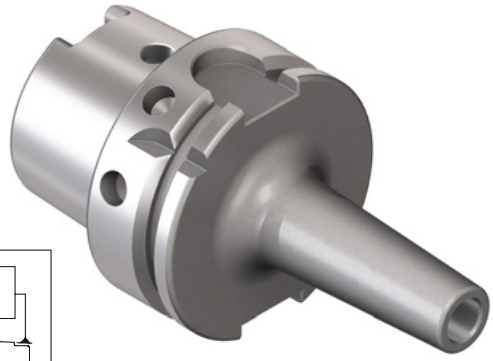

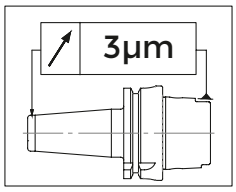

H= 0 > 100 mm - 3 µm
H= 100 >200 mm - 5 µm

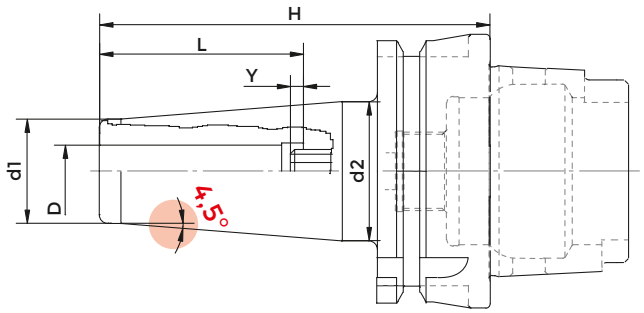

DIN 69893 - HSK 63A

4,5° PROGRAM

COD.	DESCRIPTION	HSK	D	H	L	Y max	d1	d2	G2,5 25000
251-21725	HSK63AH80K03-HTT	63	3	80	14	10	9	16	•
251-21726	HSK63AH80K04-HTT	63	4	80	18	10	10	17	•
251-21727	HSK63AH80K05-HTT	63	5	80	22	10	11	18	•
251-21728	HSK63AH80K06-HTT	63	6	80	36	10	21	27	•
251-21729	HSK63AH80K08-HTT	63	8	80	36	10	21	27	•
251-21730	HSK63AH85K10-HTT	63	10	85	42	10	24	32	•
251-11710	HSK63AH90K12-HTT	63	12	90	47	10	24	32	•
251-11711	HSK63AH90K14-HTT	63	14	90	47	10	27	34	•
251-11712	HSK63AH95K16-HTT	63	16	95	50	10	27	34	•
251-11714	HSK63AH100K20-HTT	63	20	100	52	10	33	42	•
251-21731	HSK63AH115K25-HTT	63	25	115	58	10	44	53	•
251-21782	HSK63AH120K32-HTT	63	32	120	62	10	44	53	•
251-21732	HSK63AH120K03-HTT	63	3	120	22	10	9	16	•
251-21733	HSK63AH120K04-HTT	63	4	120	26	10	10	17	•
251-11725	HSK63AH120K06-HTT	63	6	120	36	10	21	27	•
251-11726	HSK63AH120K08-HTT	63	8	120	36	10	21	27	•
251-11727	HSK63AH120K10-HTT	63	10	120	42	10	24	32	•
251-11728	HSK63AH120K12-HTT	63	12	120	47	10	24	32	•
251-11730	HSK63AH120K16-HTT	63	16	120	50	10	27	34	•
251-21784	HSK63AH120K20-HTT	63	20	120	52	10	33	42	•
251-21786	HSK63AH160K03-HTT	63	3	160	22	10	9	22	•
251-21787	HSK63AH160K04-HTT	63	4	160	26	10	10	22	•
251-21788	HSK63AH160K05-HTT	63	5	160	30	10	11	22	•
251-21789	HSK63AH160K06-HTT	63	6	160	36	10	21	27	•
251-21790	HSK63AH160K08-HTT	63	8	160	36	10	21	27	•
251-21791	HSK63AH160K10-HTT	63	10	160	42	10	24	32	•
251-21792	HSK63AH160K12-HTT	63	12	160	47	10	24	32	•
251-21794	HSK63AH160K16-HTT	63	16	160	50	10	27	34	•
251-21796	HSK63AH160K20-HTT	63	20	160	52	10	33	42	•
251-21797	HSK63AH160K25-HTT	63	25	160	63	10	44	53	•
251-21798	HSK63AH160K32-HTT	63	32	160	63	10	44	53	•

SHRINK FIT CHUCKS WITH RESEALABLE COOLANT DUCT HOLES HSK63 DIN 69893 TIPO A

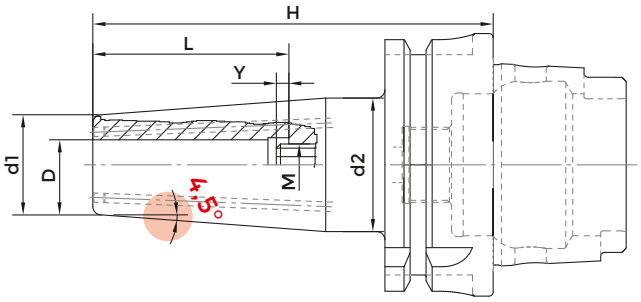

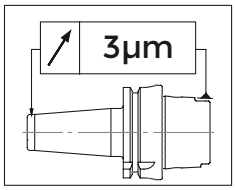

H= 0 > 100 mm - 3 µm
H= 100 >200 mm - 5 µm

DIN 69893A

4,5° PROGRAM

COD.	DESCRIPTION	HSK	D	H	L	Y max	d1	d2	G2,5 25000
251-31763	HSK63AH80K06-HTT-L	63	6	80	36	10	21	27	•
251-31764	HSK63AH80K08-HTT-L	63	8	80	36	10	21	27	•
251-31765	HSK63AH85K10-HTT-L	63	10	85	42	10	24	32	•
251-31766	HSK63AH90K12-HTT-L	63	12	90	47	10	24	32	•
251-31767	HSK63AH90K14-HTT-L	63	14	90	47	10	27	34	•
251-31768	HSK63AH95K16-HTT-L	63	16	95	50	10	27	34	•
251-31770	HSK63AH100K20-HTT-L	63	20	100	52	10	33	42	•
251-31790	HSK63AH120K06-HTT-I.C.	63	6	120	36	10	21	27	•
251-31791	HSK63AH120K08-HTT-I.C.	63	8	120	36	10	21	27	•
251-31775	HSK63AH120K10-HTT-I.C.	63	10	120	42	10	24	32	•
251-31776	HSK63AH120K12-HTT-I.C.	63	12	120	47	10	24	32	•
251-31794	HSK63AH120K14-HTT-I.C.	63	14	120	47	10	27	34	•
251-31778	HSK63AH120K16-HTT-I.C.	63	16	120	50	10	27	34	•
251-31779	HSK63AH120K20-HTT-I.C.	63	20	120	52	10	33	42	•
251-31780	HSK63AH160K06-HTT-I.C.	63	6	160	36	10	21	33,5	•
251-31781	HSK63AH160K08-HTT-I.C.	63	8	160	36	10	21	33,5	•
251-31782	HSK63AH160K10-HTT-I.C.	63	10	160	42	10	24	37,5	•
251-31783	HSK63AH160K12-HTT-I.C.	63	12	160	47	10	24	37,5	•
251-31784	HSK63AH160K14-HTT-I.C.	63	14	160	47	10	27	40	•
251-31785	HSK63AH160K16-HTT-I.C.	63	16	160	47	10	27	43	•
251-31786	HSK63AH160K18-HTT-I.C.	63	18	160	50	10	33	47	•
251-31787	HSK63AH160K20-HTT-I.C.	63	20	160	50	10	33	50	•
251-31788	HSK63AH160K25-HTT-I.C.	63	25	160	58	10	44	53	•
251-31789	HSK63AH160K32-HTT-I.C.	63	32	160	63	10	44	53	•

SHRINK FIT CHUCKS
HSK 63 DIN 69893 TIPO A

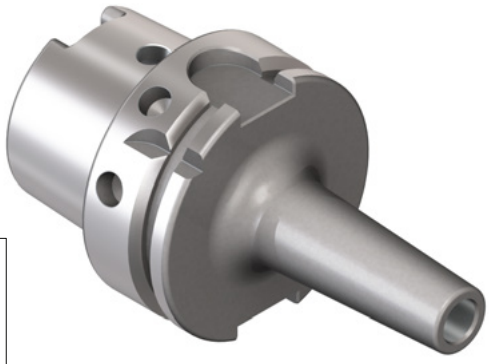

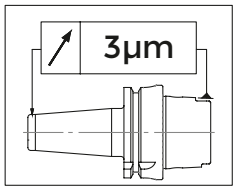

H= 0 > 100 mm - 3 µm
H= 100 >200 mm - 5 µm

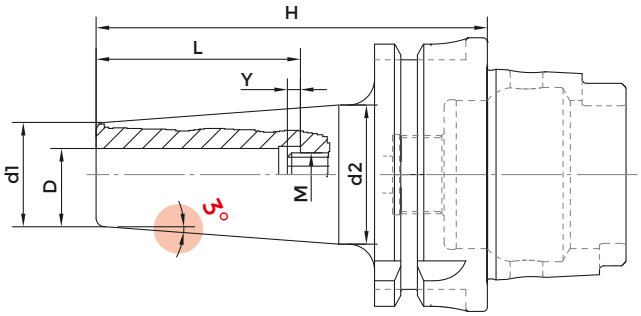

DIN 69893A

3° PROGRAM

COD.	DESCRIPTION	HSK	D	H	L	Y max	d1	d2	G2,5 25000
251-31711	HSK63AH80K03-HTT	63	3	80	28	-	9	14	•
251-31712	HSK63AH80K04-HTT	63	4	80	28	-	10	15	•
251-31714	HSK63AH80K06-HTT	63	6	80	36	10	12	17	•
251-31715	HSK63AH80K08-HTT	63	8	80	36	10	14	19	•
251-31716	HSK63AH85K10-HTT	63	10	85	42	10	16	21	•
251-31717	HSK63AH90K12-HTT	63	12	90	47	10	18	24	•
251-31719	HSK63AH95K16-HTT	63	16	95	47	10	24	30	•
251-31721	HSK63AH100K20-HTT	63	20	100	52	10	26	32	•
251-31722	HSK63AH120K03-HTT	63	3	120	28	-	9	18	•
251-31723	HSK63AH120K04-HTT	63	4	120	28	-	10	19	•
251-31725	HSK63AH120K06-HTT	63	6	120	36	10	12	21	•
251-31726	HSK63AH120K08-HTT	63	8	120	36	10	14	23	•
251-31727	HSK63AH120K10-HTT	63	10	120	42	10	16	25	•
251-31728	HSK63AH120K12-HTT	63	12	120	47	10	18	27	•
251-31730	HSK63AH120K16-HTT	63	16	120	47	10	24	33	•
251-31732	HSK63AH120K20-HTT	63	20	120	52	10	26	35	•
251-31733	HSK63AH160K03-HTT	63	3	160	28	-	9	22	•
251-31734	HSK63AH160K04-HTT	63	4	160	28	-	10	23	•
251-31736	HSK63AH160K06-HTT	63	6	160	36	10	12	25	•
251-31737	HSK63AH160K08-HTT	63	8	160	36	10	14	27	•
251-31738	HSK63AH160K10-HTT	63	10	160	42	10	16	29	•
251-31739	HSK63AH160K12-HTT	63	12	160	47	10	18	31	•
251-31741	HSK63AH160K16-HTT	63	16	160	47	10	24	37	•
251-31742	HSK63AH160K18-HTT	63	18	160	50	10	24	36	•
251-31743	HSK63AH160K20-HTT	63	20	160	52	10	26	38	•

SHRINK FIT CHUCKS
HSK 100 DIN 69893 TIPO A

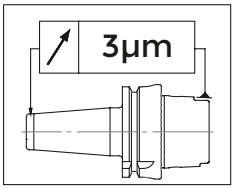

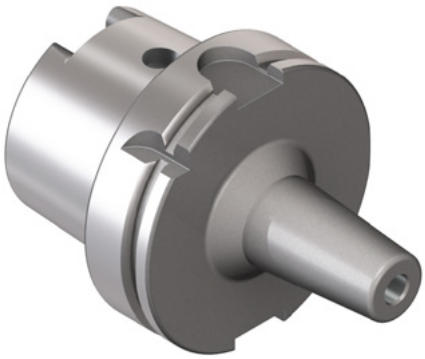

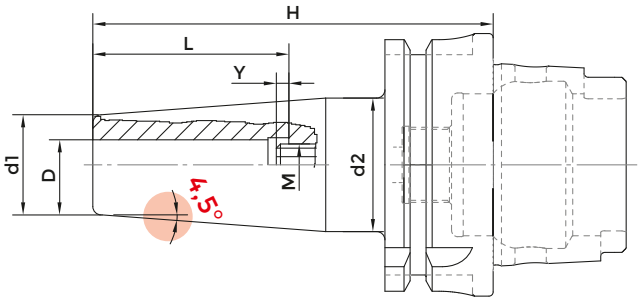

H= 0 > 100 mm - 3 µm
H= 100 >200 mm - 5 µm

DIN 69893A

4,5° PROGRAM

COD.	DESCRIPTION	HSK	D	H	L	d1	d2	G2,5 25000
251-21735	HSK100AH85K06-HTT	100	6	85	36	21	27	•
251-21736	HSK100AH85K08-HTT	100	8	85	36	21	27	•
251-21737	HSK100AH90K10-HTT	100	10	90	42	24	32	•
251-21738	HSK100AH95K12-HTT	100	12	95	47	24	32	•
251-21739	HSK100AH95K14-HTT	100	14	95	47	27	34	•
251-21740	HSK100AH100K16-HTT	100	16	100	50	27	34	•
251-21742	HSK100AH100K20-HTT	100	20	100	52	33	42	•
251-21743	HSK100AH115K25-HTT	100	25	115	58	44	53	•
251-21799	HSK100AH120K32-HTT	100	32	120	63	44	53	•
251-21744	HSK100AH130K06-HTT	100	6	130	36	21	27	•
251-21745	HSK100AH130K08-HTT	100	8	130	36	21	27	•
251-21746	HSK100AH130K10-HTT	100	10	130	42	24	32	•
251-21747	HSK100AH130K12-HTT	100	12	130	47	24	32	•
251-21748	HSK100AH130K14-HTT	100	14	130	47	27	34	•
251-21749	HSK100AH130K16-HTT	100	16	130	50	27	34	•
251-21751	HSK100AH130K20-HTT	100	20	130	52	33	42	•

SHRINK FIT CHUCKS WITH RESEALABLE COOLANT DUCT HOLES POLYGONAL DIN 26623-1

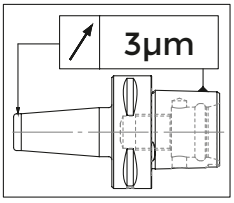

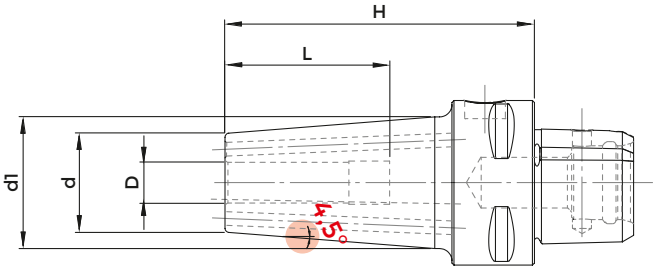

H= 0 > 100 mm - 3 µm
H= 100 >200 mm - 5 µm

DIN ISO 26623-1

4,5° PROGRAM

COD.	DESCRIPTION	POLYGONAL	D	H	L	d	d1	G2,5 25000
251-17621	C40H75K06-HTT- I.C.	C 40	6	75	36	20	27	•
251-17623	C40H75K08-HTT- I.C.	C 40	8	75	36	20	27	•
251-17625	C40H75K10-HTT- I.C.	C 40	10	75	42	24	32	•
251-17627	C40H75K12-HTT- I.C.	C 40	12	75	47	24	32	•
251-17622	C40H120K06-HTT- I.C.	C 40	6	120	36	20	27	•
251-17624	C40H120K08-HTT- I.C.	C 40	8	120	36	20	27	•
251-17626	C40H120K10-HTT- I.C.	C 40	10	120	42	24	32	•
251-17628	C40H120K12-HTT- I.C.	C 40	12	120	47	24	32	•
251-17629	C50H75K06-HTT- I.C.	C 50	6	75	36	20	27	•
251-17631	C50H75K08-HTT- I.C.	C 50	8	75	36	20	27	•
251-17633	C50H75K10-HTT- I.C.	C 50	10	75	42	24	32	•
251-17635	C50H75K12-HTT- I.C.	C 50	12	75	47	24	32	•
251-17637	C50H80K16-HTT- I.C.	C 50	16	80	50	27	34	•
251-17639	C50H85K20-HTT- I.C.	C 50	20	85	52	33	42	•
251-17630	C50H120K06-HTT- I.C.	C 50	6	120	36	20	27	•
251-17632	C50H120K08-HTT- I.C.	C 50	8	120	36	20	27	•
251-17634	C50H120K10-HTT- I.C.	C 50	10	120	42	24	32	•
251-17636	C50H120K12-HTT- I.C.	C 50	12	120	47	24	32	•
251-17638	C50H120K16-HTT- I.C.	C 50	16	120	50	27	34	•
251-17640	C50H120K20-HTT- I.C.	C 50	20	120	52	33	42	•
251-17641	C63H80K06-HTT- I.C.	C 63	6	80	36	20	27	•
251-17644	C63H80K08-HTT- I.C.	C 63	8	80	36	20	27	•
251-17647	C63H80K10-HTT- I.C.	C 63	10	80	40	24	32	•
251-17650	C63H80K12-HTT- I.C.	C 63	12	80	47	24	32	•
251-17653	C63H85K16-HTT- I.C.	C 63	16	85	50	27	34	•
251-17656	C63H85K20-HTT- I.C.	C 63	20	85	50	33	42	•
251-17642	C63H120K06-HTT- I.C.	C 63	6	120	36	20	27	•
251-17645	C63H120K08-HTT- I.C.	C 63	8	120	36	20	27	•
251-17648	C63H120K10-HTT- I.C.	C 63	10	120	40	24	32	•
251-17651	C63H120K12-HTT- I.C.	C 63	12	120	47	24	32	•
251-17654	C63H120K16-HTT- I.C.	C 63	16	120	50	27	34	•

follows >>

SHRINK FIT CHUCKS WITH RESEALABLE COOLANT DUCT HOLES POLYGONAL DIN 26623-1

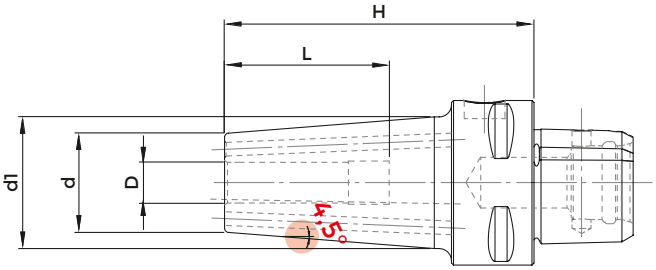

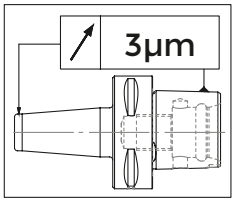

H= 0 > 100 mm - 3 µm
H= 100 >200 mm - 5 µm

DIN ISO 26623-1

4,5° PROGRAM

COD.	DESCRIPTION	POLYGONAL	D	H	L	d	d1	G2,5 25000
251-17657	C63H120K20-HTT- I.C.	C 63	20	120	50	33	42	•
251-17643	C63H160K06-HTT- I.C.	C 63	6	160	36	20	27	•
251-17646	C63H160K08-HTT- I.C.	C 63	8	160	36	20	27	•
251-17649	C63H160K10-HTT- I.C.	C 63	10	160	40	24	32	•
251-17652	C63H160K12-HTT- I.C.	C 63	12	160	47	24	32	•
251-17655	C63H160K16-HTT- I.C.	C 63	16	160	50	27	34	•
251-17658	C63H160K20-HTT- I.C.	C 63	20	160	50	33	42	•
251-17659	C80H85K06-HTT- I.C.	C 80	6	85	36	20	27	•
251-17661	C80H85K08-HTT- I.C.	C 80	8	85	36	20	27	•
251-17663	C80H85K10-HTT- I.C.	C 80	10	85	42	24	32	•
251-17665	C80H85K12-HTT - I.C.	C 80	12	85	47	24	32	•
251-17667	C80H90K16-HTT- I.C.	C 80	16	90	50	27	34	•
251-17669	C80H90K20-HTT- I.C.	C 80	20	90	52	33	42	•
251-17660	C80H130K06-HTT- I.C.	C 80	6	130	36	20	27	•
251-17662	C80H130K08-HTT- I.C.	C 80	8	130	36	20	27	•
251-17664	C80H130K10-HTT- I.C.	C 80	10	130	42	24	32	•
251-17666	C80H130K12-HTT- I.C.	C 80	12	130	47	24	32	•
251-17668	C80H130K16-HTT- I.C.	C 80	16	130	50	27	34	•
251-17670	C80H130K20-HTT- I.C.	C 80	20	130	52	33	42	•

SHRINKING EXTENSIONS

COD.	DESCRIPTION	D	H	L	Y max	d1	d2
251-15110	D12H150K03-HTT	3	150	-	-	8	12
251-15111	D12H150K04-HTT	4	150	-	-	8	12
251-15133	D12H150K05-HTT	5	150	-	-	10	12
251-15134	D12H150K06-HTT	6	150	36	10	10	12
251-15112	D16H150K03-HTT	3	150	-	-	10	16
251-15113	D16H150K04-HTT	4	150	-	-	10	16
251-15114	D16H150K05-HTT	5	150	-	-	10	16
251-15115	D16H150K06-HTT	6	150	36	10	10	16
251-15139	D16H150K08-HTT	8	150	36	10	12	16
251-15140	D20H150K03-HTT	3	150	-	-	10	20
251-15141	D20H150K04-HTT	4	150	-	-	10	20
251-15117	D20H150K06-HTT	6	150	36	10	10	20
251-15118	D20H150K08-HTT	8	150	36	10	12	20
251-15145	D20H150K10-HTT	10	150	42	10	14	20
251-15146	D20H150K12-HTT	12	150	47	10	16	20
251-15149	D25H150K05-HTT	5	150	-	-	15	25
251-15150	D25H150K06-HTT	6	150	36	10	20	25
251-15120	D25H150K10-HTT	10	150	42	10	20	25
251-15121	D25H150K12-HTT	12	150	47	10	20	25
251-15122	D25H150K14-HTT	14	150	47	10	20	25
251-15123	D25H150K16-HTT	16	150	50	10	22	25

SHRINK UNIT

COD.	DIMENSIONS	WEIGHT	POWER SUPPLY	MAX CLAMPING LENGTH	COIL from Ø6 to Ø12	MOUNT ADAPTER BT50/SK50	MOUNT ADAPTER HSK100
DMP-2000	540X400X780 h	25	6 kW - 16 A	400 mm	871-00002	871-00023	871-00029

The KINTEK induction machine quickly heats the inside of the chuck using a quick-change coil that generates an alternating magnetic field, expanding its diameter. Once the tool is inserted, the cooling of the chuck returns it to its original size.

CHUCK COOLING
After insertion, the chuck is air-cooled thanks to forced ventilation, returning to its original dimensions. The cooling generates a very high radial clamping force, securing the tool extremely firmly within the chuck.

CONFIGURATION
The machine can be configured with adapters for HSK, SK, BT, and 3 different coils to be used according to the diameters to be clamped.

SHRINK UNIT KIT

COD.	DESCRIPTION	COIL 1	COIL 2	MOUNT ADAPTER
KITDMPHSK50	DMP2000+BOBINE 3-12/12-32+ADATHSK50	871-00002	871-00003	871-00027
KITDMPHSK63	DMP2000+BOBINE3-12/12-32+ADATHSK63	871-00002	871-00003	871-00028
KITDMPHSK100	DMP2000+BOBINE3-12/12-32+ADATHSK100	871-00002	871-00003	871-00029
KITDMPTC/BT30	DMP2000+BOBINE3-12/12-32+AD TC/BT30	871-00002	871-00003	871-00021
KITDMPTC/BT40	DMP2000+BOBINE3-12/12-32+AD TC/BT40	871-00002	871-00003	871-00022
KITDMPTC/BT50	DMP2000+BOBINE3-12/12-32+AD TC/BT50	871-00002	871-00003	871-00023

ACCESSORIES FOR SHRINK-FIT MACHINES

	COD.	DESCRIPTION
	871-00001	Coil covering a range from diameter 3 to diameter 6. Ideal for small-sized tool holders.
	871-00002	Coil covering a range from diameter 6 to diameter 12*
	871-00003	Coil covering a range from diameter 12 to diameter 32. Perfect for large-sized tool holders.
	871-00004	Insulation ring from 12 to 16 mm
	871-00005	Insulation ring from 18 to 25 mm
	871-00006	Insulation ring from 25 to 32 mm
	871-00007	Heat protection gloves
	871-00008	Tool clamp Ø3
	871-00009	Tool clamp Ø4
	871-00010	Tool clamp Ø5
	871-00011	Tool clamp Ø6
	871-00012	Tool clamp Ø8
	871-00013	Tool clamp Ø10
	871-00014	Tool clamp Ø12
	871-00015	Tool clamp Ø14
	871-00016	Tool clamp Ø16
	871-00017	Tool clamp Ø18
	871-00018	Tool clamp Ø20
	871-00019	Tool clamp Ø25
	871-00020	Tool clamp Ø32
	871-00021	Mount adapter BT30
	871-00022	Mount adapter BT40/SK40
	871-00023	Mount adapter BT50/SK50*
	871-00024	Mount adapter HSK25
	871-00025	Mount adapter HSK32
	871-00026	Mount adapter HSK40
	871-00027	Mount adapter HSK50
	871-00028	Mount adapter HSK63
	871-00029	Mount adapter HSK100*

*included in the supply

HYDRO-EXPANSION CHUCKS

FOR TOOLS WITH CYLYNDRICAL SHANK

OPERATING MANUAL FOR HIDRAULIC EXPANSION CHUCKS

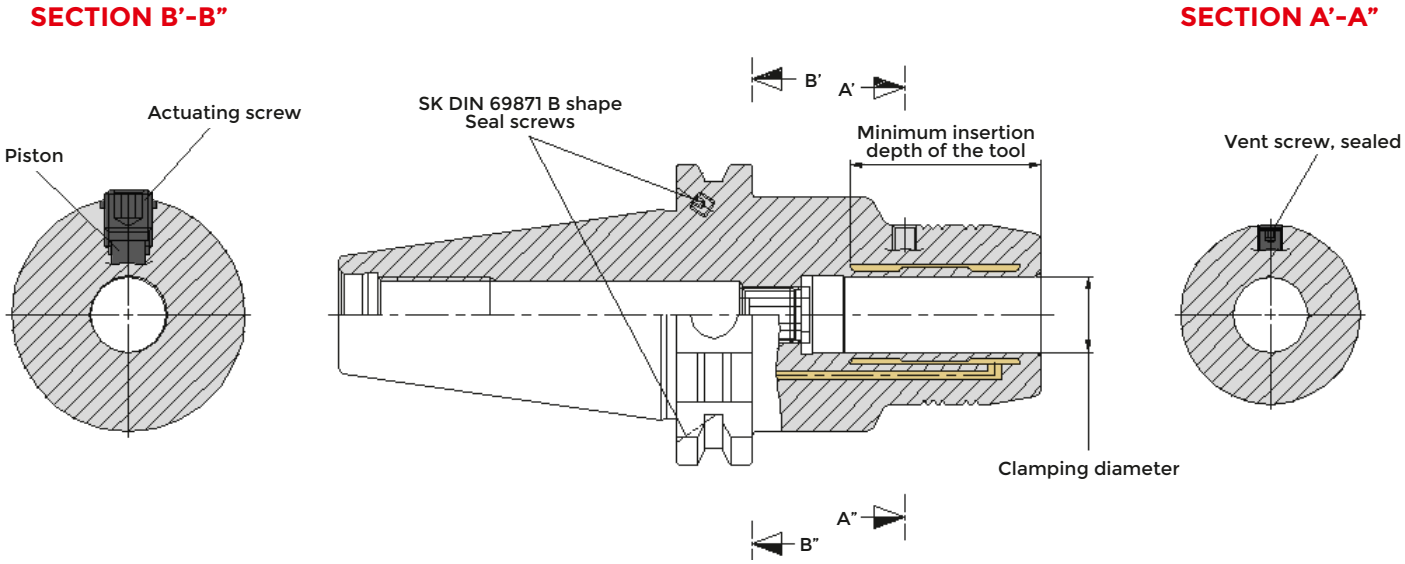

Please follow our operating instruction carefully to save time and avoid problems:

TECHNICAL INFORMATION TABLE					
CHUCK DIAMETER (HC)	DEPENDING ON THE MOUNTING SHANK (rpm)	MINIMUM CLAMPING LENGHT (mm)	OPERATING TEMPERATURE (°C)	MAX COOLANT PRESSURE (bar)	TORQUE (Nm)
HC6	40.000	27	20-50	80	8
HC8	40.000	27	20-50	80	15
HC10	40.000	32	20-50	80	30
HC12	40.000	37	20-50	80	45
HC14	40.000	37	20-50	80	75
HC16	40.000	42	20-50	80	120
HC18	40.000	42	20-50	80	170
HC20	40.000	42	20-50	80	230
HC25	25.000	48	20-50	80	300
HC32	25.000	55	20-50	80	400

- Insert tools with totally cylindrical shank only and with tolerance h6
- Do not directly insert Weldon or Whistle-Notch attachments but only with reduction sleeve
- Never clamp the hydraulic chuck loosely without inserting the tool first
- During the clamping phase, screw the clamping screw until the end stop
- If the chuck is subject to long periods of use, open and clamp again the mounted tool before reusing it

HYDRO-EXPANSION CHUCKS FOR TOOLS WITH CYLYNDRICAL SHANK

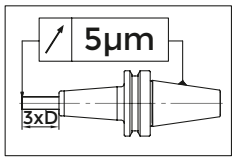

H= 0 > 100 mm - 5 µm
H= 100 > 200 mm - 10 µm

TYPE A

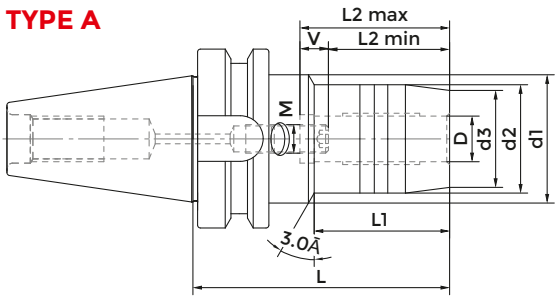

TYPE B

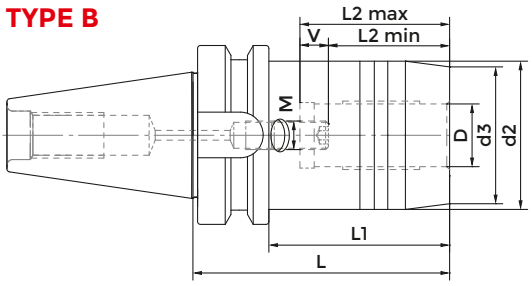

MAS 403/BT AD

COD.	DESCRIPTION	ISO	D	d1	d2	d3	L	L1	L2 min	L2 max	V	M	TYPE	G2,5 20000
252-11467	BT30-HC3-70	30	3	45	24	21	70	30	-	24	-	-	A	•
252-11468	BT30-HC4-70	30	4	45	25	22	70	30	-	28	-	-	A	•
252-11470	BT30-HC6-70	30	6	45	28	25	70	28	27,5	37,5	10	M5x0,8	A	•
252-11471	BT30-HC8-70	30	8	45	30	27	70	28	27,5	37,5	10	M6x1	A	•
252-11472	BT30-HC10-75	30	10	45	32	29	75	38	32,5	42,5	10	M6x1	A	•
252-11473	BT30-HC12-75	30	12	45	34	31	75	36	37,5	47,5	10	M6x1	A	•
252-11474	BT30-HC14-85	30	14	45	36	33	85	44	37,5	47,5	10	M6x1	A	•
252-11419	BT30-HC16-90	30	16	45	38	35	90	48	42,5	52,5	10	M8x1	A	•
*252-11442	BT30-G20CS-85	30	20	-	44	40	85	63	42,5	52,5	10	M8x1	B	•
252-11421	BT30-HC20-90	30	20	-	43	40	90	68	42,5	52,5	10	M8x1	B	•
252-11422	BT40-HC6-90	40	6	50	28	25	90	44	27,5	37,5	10	M5x0,8	A	•
252-11423	BT40-HC8-90	40	8	50	30	27	90	39	27,5	37,5	10	M6x1	A	•
252-11424	BT40-HC10-90	40	10	50	32	29	90	44	32,5	42,5	10	M6x1	A	•
252-11425	BT40-HC12-90	40	12	50	34	31	90	44	37,5	47,5	10	M6x1	A	•
252-11426	BT40-HC14-90	40	14	50	36	33	90	44	37,5	47,5	10	M6x1	A	•
252-11427	BT40-HC16-90	40	16	50	38	35	90	48	42,5	52,5	10	M8x1	A	•
252-11428	BT40-HC18-90	40	18	50	41	38	90	48	42,5	52,5	10	M8x1	A	•
*252-11443	BT40-G20CS-72,5	40	20	-	49,5	40	72,5	45,5	42,5	52,5	10	M8x1	B	•
252-11429	BT40-HC20-90	40	20	50	43	40	90	48	42,5	52,5	10	M8x1	A	•
252-11482	BT40-HC20-140	40	20	50	43	40	140	48	42,5	52,5	10	M8x1	A	•
252-11483	BT40-HC25-100	40	25	-	57	53	100	73	51	61	10	M16x1	B	•
252-11485	BT40-HC32-105	40	32	-	63	58	105	-	55	65	10	M16x1	B	•
252-11433	BT50-HC8-90	50	8	50	30	27	90	32	27,5	37,5	10	M6x1	A	•
252-11434	BT50-HC10-90	50	10	50	32	29	90	32	32,5	42,5	10	M6x1	A	•
252-11435	BT50-HC12-90	50	12	50	34	31	90	32	37,5	47,5	10	M6x1	A	•
252-11436	BT50-HC14-90	50	14	50	36	33	90	32	37,5	47,5	10	M6x1	A	•
252-11437	BT50-HC16-90	50	16	50	38	35	90	32	42,5	52,5	10	M8x1	A	•
*252-11439	BT50-HC20-90	50	20	50	43	40	90	32	42,5	52,5	10	M8x1	A	•
252-11494	BT50-HC20-140	50	20	50	43	40	140	48	42,5	52,5	10	M8x1	A	•
252-11495	BT50-HC25-105	50	25	-	57	53	105	86	51	61	10	M16x1	A	•
252-11496	BT50-HC25-150	50	25	-	57	53	150	112	51	61	10	M16x1	B	•
252-11444	BT50-G32CS-90	50	32	-	72	60	90	52	55	65	10	M16x1	B	•
252-11497	BT50-HC32-115	50	32	-	63	58	115	77	55	65	10	M16x1	B	•

*Compact VERSION

ACCESSORIES

p. 199

HYDRO-EXPANSION CHUCKS FOR TOOLS WITH CYLYNDRICAL SHANK

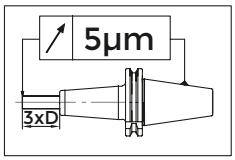

H= 0 > 100 mm - 5 µm
H= 100 > 200 mm - 10 µm

TYPE A

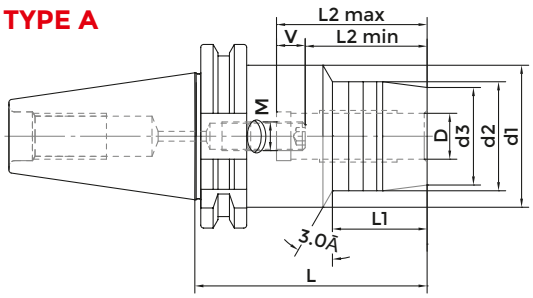

TYPE B

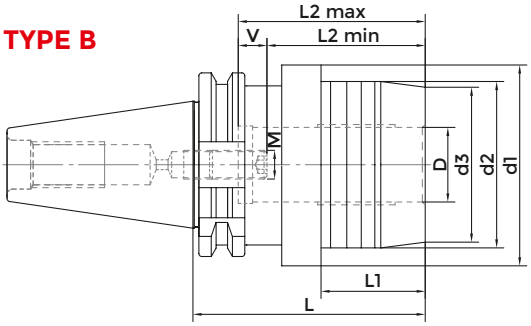

DIN69871 AD

COD.	DESCRIPTION	ISO	D	d1	d2	d3	L	L1	L2 min	L2 max	V	M	TYPE	G2,5 20000
252-11305	TC40-HC6-80,5	40	6	50	28	25	80,5	44	27,5	37,5	10	M5x0,8	A	•
252-11307	TC40-HC8-80,5	40	8	50	30	27	80,5	44	27,5	37,5	10	M6x1	A	•
252-11308	TC40-HC8-110	40	8	50	30	27	110	44	27,5	37,5	10	M6x1	A	•
252-11309	TC40-HC10-80,5	40	10	50	32	29	80,5	44	32,5	42,5	10	M6x1	A	•
252-11310	TC40-HC10-110	40	10	50	32	29	110	44	32,5	42,5	10	M6x1	A	•
252-11311	TC40-HC12-80,5	40	12	50	34	31	80,5	44	37,5	47,5	10	M6x1	A	•
252-11312	TC40-HC12-110	40	12	50	34	31	110	44	37,5	47,5	10	M6x1	A	•
252-11327	TC40-HC14-80,5	40	14	50	36	33	80,5	44	37,5	47,5	10	M6x1	A	•
252-11313	TC40-HC16-80,5	40	16	50	38	35	80,5	48	42,5	52,5	10	M8x1	A	•
252-11314	TC40-HC16-110	40	16	50	38	35	110	48	42,5	52,5	10	M8x1	A	•
252-11328	TC40-HC18-80,5	40	18	50	41	38	80,5	30	42,5	52,5	10	M8x1	A	•
*252-11325	TC40-G20CS-64,5	40	20	-	49,5	40	64,5	45,5	42,5	52,5	10	M8x1	A	•
5150	TC40-G20CS-64,5 AD+B	40	20	-	49,5	40	64,5	45,5	42,5	52,5	10	M8x1	A	•
252-11315	TC40-HC20-80,5	40	20	50	43	40	80,5	48	42,5	52,5	10	M8x1	A	•
252-11316	TC40-HC20-110	40	20	50	43	40	110	48	42,5	52,5	10	M8x1	A	•
252-11317	TC40-HC25-80,5	40	25	66	57	53	80,5	26	51	61	10	M16x1	B	•
252-11318	TC40-HC32-80,5	40	32	80	63	60	80,5	26	55	65	10	M16x1	B	•
252-11348	TC50-HC6-90	50	6	50	28	25	90	44	27,5	37,5	10	M5x0,8	A	•
252-11350	TC50-HC8-90	50	8	50	30	27	90	44	27,5	37,5	10	M6x1	A	•
252-11352	TC50-HC10-90	50	10	50	32	29	90	44	32,5	42,5	10	M6x1	A	•
252-11354	TC50-HC12-90	50	12	50	34	31	90	44	37,5	47,5	10	M6x1	A	•
252-11356	TC50-HC14-90	50	14	50	36	33	90	47	37,5	47,5	10	M6x1	A	•
252-11358	TC50-HC16-90	50	16	50	38	35	90	48	42,5	52,5	10	M8x1	A	•
252-11360	TC50-HC18-90	50	18	50	41	38	90	48	42,5	52,5	10	M8x1	A	•
252-11362	TC50-HC20-90	50	20	50	43	40	90	48	42,5	52,5	10	M8x1	A	•
252-11363	TC50-HC20-140	50	20	50	43	40	140	48	42,5	52,5	10	M8x1	A	•
252-11364	TC50-HC25-105	50	25	-	57	53	105	86	51	61	10	M16x1	B	•
*252-11326	TC50-G32CS-81	50	32	-	72	60	81	62	55	65	10	M16x1	B	•
252-11366	TC50-HC32-115	50	32	-	63	58	115	96	55	65	10	M16x1	B	•
252-11367	TC50-HC32-140	50	32	-	63	58	140	121	55	65	10	M16x1	B	•

*Compact VERSION

ACCESSORIES

p. 199

HYDRO-EXPANSION CHUCKS FOR TOOLS WITH CYLYNDRICAL SHANK

TYPE A

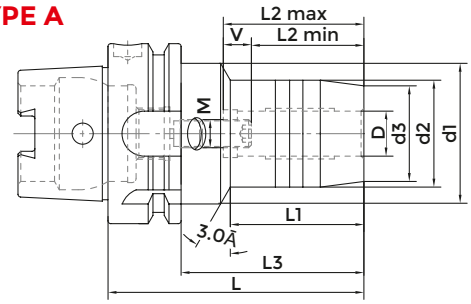

TYPE B

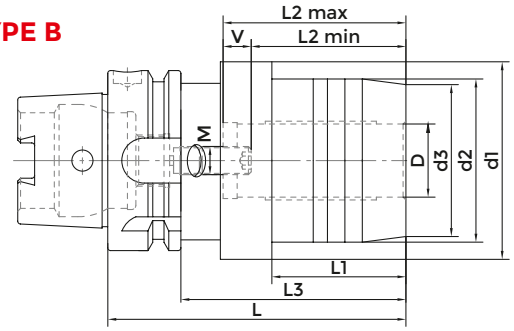

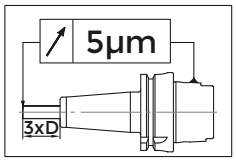

H= 0 > 100 mm - 5 µm
H= 100 > 200 mm - 10 µm

DIN69893 A

COD.	DESCRIPTION	HSK	D	d1	d2	d3	L	L1	L3	L2 min	L2 max	V	M	TYPE	G2,5 20000
252-11759	HSK50A-HC6-70	50	6	40	28	25	70	28	44	27,5	37,5	10	M5x0,8	A	•
252-11760	HSK50A-HC8-70	50	8	40	30	27	70	28	44	27,5	37,5	10	M6x1	A	•
252-11761	HSK50A-HC10-80	50	10	40	32	29	80	34	54	32,5	42,5	10	M6x1	A	•
252-11762	HSK50A-HC12-85	50	12	40	34	31	85	44	59	37,5	47,5	10	M6x1	A	•
252-11766	HSK50A-HC20-90	50	20	-	42	40	90	-	64	42,5	52,5	10	M6x1	A	•
252-11737	HSK63A-HC6-70	63	6	50	28	25	70	24	44	27,5	37,5	10	M5x0,8	A	•
252-11738	HSK63A-HC8-70	63	8	50	30	27	70	24	44	27,5	37,5	10	M6x1	A	•
252-11739	HSK63A-HC10-80	63	10	50	32	29	80	35	54	32,5	42,5	10	M6x1	A	•
252-11740	HSK63A-HC12-85	63	12	50	34	31	85	40	59	37,5	47,5	10	M6x1	A	•
252-11741	HSK63A-HC14-85	63	14	50	36	33	85	40	59	37,5	47,5	10	M6x1	A	•
252-11742	HSK63A-HC16-90	63	16	50	38	35	90	46	64	42,5	52,5	10	M8x1	A	•
*252-11744	HSK63A-HC20-90	63	20	50	43	40	90	48	64	42,5	52,5	10	M8x1	A	•
252-21718	HSK63A-HC20-150	63	20	50	43	40	150	108	124	42,5	52,5	10	M8x1	-	•
252-21719	HSK63A-HC20-200	63	20	50	43	40	200	108	174	42,5	52,5	10	M8x1	-	•
252-11745	HSK63A-HC25-120	63	25	63	57	53	120	59	94	51	61	10	M16x1	B	•
252-11746	HSK63A-HC32-125	63	32	75	63	58	125	63	99	55	65	10	M16x1	B	•
252-11767	HSK100A-HC6-75	100	6	54	28	25	75	26	46	27,5	37,5	10	M5x0,8	A	•
252-11768	HSK100A-HC8-75	100	8	54	30	27	75	26	46	27,5	37,5	10	M6x1	A	•
252-11769	HSK100A-HC10-90	100	10	50	32	29	90	42	61	32,5	42,5	10	M6x1	A	•
252-11770	HSK100A-HC12-95	100	12	50	34	31	95	47	66	37,5	47,5	10	M6x1	A	•
252-11772	HSK100A-HC16-100	100	16	50	38	35	100	53	71	42,5	52,5	10	M8x1	A	•
252-11774	HSK100A-HC20-105	100	20	50	43	40	105	59	76	42,5	52,5	10	M8x1	A	•
252-11775	HSK100A-HC25-110	100	25	63	57	53	110	62	81	51	61	10	M8x1	A	•
252-11776	HSK100A-HC32-110	100	32	75	63	58	110	62	81	55	65	10	M8x1	A	•

*Compact VERSION

ACCESSORIES

p. 199

SEALED CYLINDRICAL COLLETS

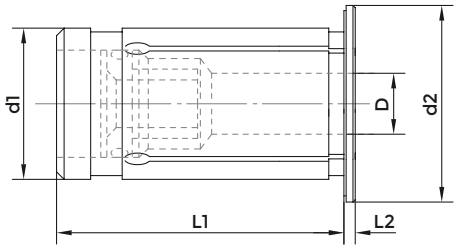

TYPE	d1	d2	L1	L2	D nole size
OGX12D...	12	16,5	45	2	2.5;3;4;5;6;7;8;*9;*10
OGX20D...	20	24	50.5	2	3;4;5;6;7;8;9;10;11;12;13;14; 15;16;*17;*18
0676	25	29	54,5	2	6;7;8;9;1010;11;12;13;14;15; 16;17;18;19;20;*21;*22
OGX32D...	32	35,5	60.5	2	4;5;6;7;8;9;10;11;12; 13;14;15; 16;17;18;19;20;21;22;23;24; 25;*26;*27;*28

* OVERSIZE diameters - for the construction characteristics, do not use of high pressure

COLLETS FOR HYDRAULIC CHUCKS

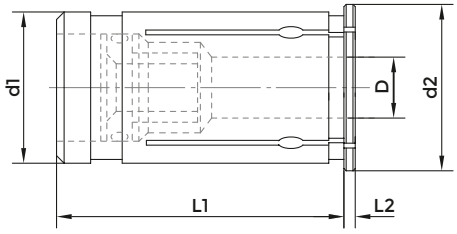

TYPE	d1	d2	L1	L2	D nole size
GX12D...	12	16	44,5	2	3;4;5;6;8;
GX20D...	20	24	50.5	2	3;4;5;6;8;10;12;14;16
GX32D...	32	36	60.5	3	6;8;10;12;14;16;18;20;25

HYDRAULIC KIT

COD.	COMPOSITION
KIT BT30 G20	N°1 BT30 H85 G20-WO + n°5 collets GX20: Ø6,8,10,12,16
KIT BT40 G20	N°1 BT40 H72,5 G20-WO + n°5 collets GX20: Ø6,8,10,12,16
KIT BT40 G32	N°1 BT40 H105 G32-WO + n°7 collets GX32: Ø10,12,14,16,18,20,25
KIT TC40 G20	N°1 TC40 H64,5 G20-WO + n°5 collets GX20: Ø6,8,10,12,16
KIT TC40 G32	N°1 TC40 H80,5 G32-WO + n°7 collets GX32: Ø10,12,14,16,18,20,25
KIT BT50 G20	N°1 BT50 H90 G20-WO + n°5 collets GX20: Ø6,8,10,12,16
KIT BT50 G32	N°1 BT50 H90 G32-WO + n°7 collets GX32: Ø10,12,14,16,18,20,25
KIT TC50 G20	N°1 TC50 H90 G20-WO + n°5 collets GX20: Ø6,8,10,12,16
KIT TC50 G32	N°1 TC50 H81 G32-WO + n°7 collets GX32: Ø10,12,14,16,18,20,25
KIT HSK63A G20	N°1 HSK63A H90 G20 + n°5 collets GX20: Ø6,8,10,12,16
KIT HSK63A G32	N°1 HSK63A H125 G32 + n°7 collets GX32: Ø10,12,14,16,18,20,25
KIT HSK100 G20	N°1 HSK100A H105 G20 + n°5 collets GX20: Ø6,8,10,12,16
KIT HSK100 G32	N°1 HSK100A H110 G32 + n°7 collets GX32: Ø10,12,14,16,18,20,25

Kit Box:
- 1 hydraulic chuck
- 1 collets kit
- 1 wrench

HYDRO POWER LINE

A NEW HYDRAULIC CHUCK TECHNOLOGY FOR HIGH PRECISION AND EXCELLENT MACHINING QUALITY

Thanks to a modern mixture of conventional steel body and sintered-processed material, we introduce you to the new **HYDRO POWER LINE** of chucks.

Main advantages:
- Thermal performances till 120 ° C and the clamping force increases under the influence of temperature.
- Suitable solution for Drilling, Reaming and also Milling!
- Ideal for machining in contour-critical areas, slim 3° version as for shrink
- High torque transmission
- Long tool life and easy tool change
- Exceptional radial runout <3µ
- No investment for additional equipment , no risk of burning for operator or damaging the holder because of wring cooling.

HYDRO-EXPANSION CHUCKS FOR TOOLS WITH CYLINDRICAL SHANK

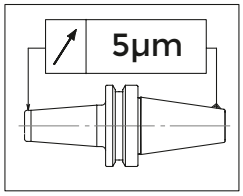

H= 0 > 100 mm - 5 µm
H= 100 > 200 mm - 10 µm

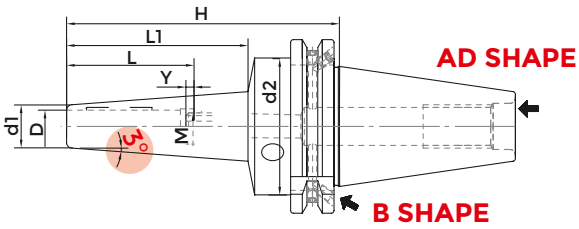

DIN69871

3° PROGRAMME HYDRO SLIM LINE

COD.	DESCRIPTION	ISO	D	H	L	Y max	d1	d2	L1	M	SW	G2,5 25000
252-11368	TC40H120D03-HPL	40	3	120	28	16	9	49,5	80	M2,5	1,3	•
252-11369	TC40H120D04-HPL	40	4	120	28	12	10	49,5	80	M2,5	1,3	•
252-11371	TC40H120D06-HPL	40	6	120	37	10	12	49,5	80	M5	2,5	•
252-11379	TC40H160D06-HPL	40	6	160	37	10	16	49,5	119	M5	2,5	•
252-11380	TC40H200D06-HPL	40	6	200	37	10	16	49,5	161	M5	2,5	•
252-11372	TC40H120D08-HPL	40	8	120	37	10	14	49,5	80	M6	3	•
252-11381	TC40H160D08-HPL	40	8	160	37	10	18	49,5	120	M6	3	•
252-11373	TC40H120D10-HPL	40	10	120	41	10	16	49,5	81	M8x1	3	•
252-11383	TC40H160D10-HPL	40	10	160	41	10	20	49,5	121	M8x1	3	•
252-11374	TC40H120D12-HPL	40	12	120	46	10	18	49,5	82	M10x1	5	•
252-11385	TC40H160D12-HPL	40	12	160	46	10	22	49,5	122	M10x1	5	•
252-11376	TC40H120D16-HPL	40	16	120	49	10	24	49,5	79	M12x1	5	•

HYDRO-EXPANSION CHUCKS FOR TOOLS WITH CYLYNDRICAL SHANK

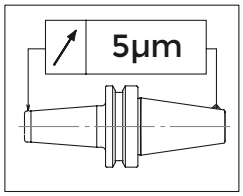

H= 0 > 100 mm - 5 µm
H= 100 > 200 mm - 10 µm

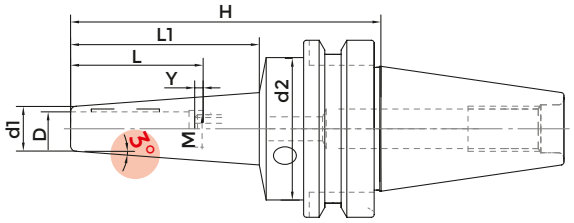

MAS BT

3° PROGRAMME HYDRO SLIM LINE

COD.	DESCRIPTION	ISO	D	H	L	Y max	d1	d2	L1	M	SW	G2,5 25000
252-21401	BT40H120D03-HPL	40	3	120	28	16	9	49,5	72	M2,5	1,3	•
252-21402	BT40H120D04-HPL	40	4	120	28	12	10	49,5	72	M2,5	1,3	•
252-21404	BT40H120D06-HPL	40	6	120	37	10	12	49,5	72	M5	2,5	•
252-21412	BT40H160D06-HPL	40	6	160	37	10	16	49,5	111	M5	2,5	•
252-21405	BT40H120D08-HPL	40	8	120	37	10	14	49,5	72	M6	3	•
252-21406	BT40H120D10-HPL	40	10	120	41	10	16	49,5	73	M8x1	3	•
252-21407	BT40H120D12-HPL	40	12	120	46	10	18	49,5	74	M10x1	5	•
252-21411	BT40H120D20-HPL	40	20	120	51	10	28	49,5	72	M16x1	5	•

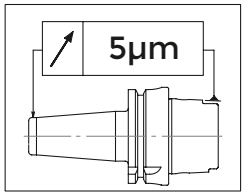

H= 0 > 100 mm - 5 µm
H= 100 > 200 mm - 10 µm

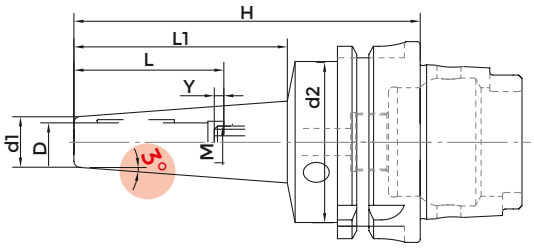

DIN69893A

3° PROGRAMME HYDRO SLIM LINE

COD.	DESCRIPTION	HSK	D	H	L	Y max	d1	d2	L1	M	SW	G2,5 25000
252-21720	HSK63AH120D03-HPL	63	3	120	28	16	9	50	73	M2,5	1,3	•
252-21721	HSK63AH120D04-HPL	63	4	120	28	12	10	50	73	M2,5	1,3	•
252-21723	HSK63AH120D06-HPL	63	6	120	37	10	12	50	73	M5	2,5	•
252-21738	HSK63AH160D06-HPL	63	6	160	37	10	16	50	111	M5	2,5	•
252-21724	HSK63AH120D08-HPL	63	8	120	37	10	14	50	74	M6	3	•
252-21754	HSK63AH160D08-HPL	63	8	160	37	10	18	50	111	M6	3	•
252-21725	HSK63AH120D10-HPL	63	10	120	41	10	16	50	74	M8x1	3	•
252-21757	HSK63AH160D10-HPL	63	10	160	41	10	20	50	113	M8x1	3	•
252-21726	HSK63AH120D12-HPL	63	12	120	46	10	18	50	75	M10x1	5	•
252-21760	HSK63AH160D12-HPL	63	12	160	46	10	22	50	113	M10x1	5	•
252-21727	HSK63AH120D14-HPL	63	14	120	46	10	22	50	71	M10x1	5	•
252-21728	HSK63AH120D16-HPL	63	16	120	49	10	24	50	72	M12x1	5	•
252-21729	HSK63AH120D18-HPL	63	18	120	49	10	26	50	72	M12x1	5	•
252-21730	HSK63AH120D20-HPL	63	20	120	51	10	28	50	72	M16x1	5	•

HYDRO-EXPANSION CHUCKS FOR TOOLS WITH CYLYNDRICAL SHANK HIGH CLAMPING FORCE

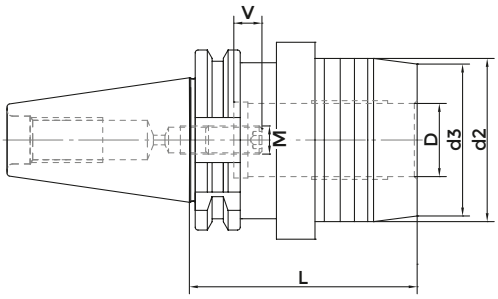

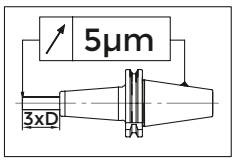

H= 0 > 100 mm - 5 µm

DIN 69871

COD.	DESCRIPTION	ISO	D	d2	d3	L	V	M	G2.5 25000
252-11388	TC40-HC12-50 EHG	40	12	42	32	50	10	M8X1	•
252-11389	TC40-HC20-64,5 EHG	40	20	49,3	39,3	64,5	10	M8X1	•
252-11390	TC50-HC20-64,5 EHG	50	20	43,3	39,3	64,5	10	M8X1	•
252-11391	TC50-HC32-81 EHG	50	32	72	58,5	81	10	M8X1	•

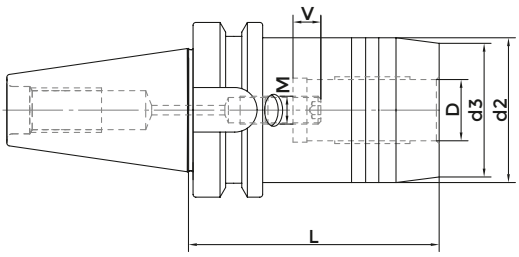

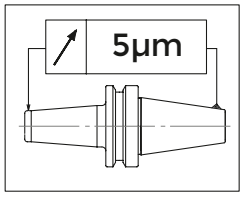

H= 0 > 100 mm - 5 µm

MAS 403/BT - JIS-B 6339

COD.	DESCRIPTION	ISO	D	d2	d3	L	V	M	G2.5 25000
252-17101	BT30-HC12-69 EHG DK	30	12	42	32	69	10	M8X1	•
252-17102	BT30-HC20-90 EHG DK	30	20	42	38	90	10	M8X1	•
252-17103	BT40-HC12-58 EHG DK	40	12	42	32	58	10	M8X1	•
252-17104	BT40-HC20-72,5 EHG DK	40	20	49,3	38	72,5	10	M8X1	•

HYDRO-EXPANSION CHUCKS FOR TOOLS WITH CYLYNDRICAL SHANK HIGH CLAMPING FORCE

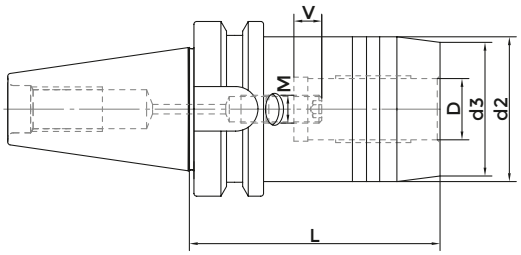

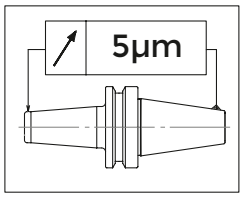

H= 0 > 100 mm - 5 µm

MAS 403/BT

COD.	DESCRIPTION	ISO	D	d2	d3	L	V	M	G2.5 25000
252-11538	BT30-HC12-69 EHG	30	12	42	32	69	10	M8X1	•
252-11539	BT30-HC20-90 EHG	30	20	42	38	90	10	M8X1	•
252-21420	BT40-HC12-58 EHG AD+B	40	12	42	32	58	10	M8X1	•
252-21421	BT40-HC20-72,5 EHG AD+B	40	20	49,3	39,3	72,5	10	M8X1	•
252-21423	BT50-HC20-83,5 EHG AD+B	50	20	49,3	39,3	83,5	10	M8X1	•
252-21422	BT50-HC32-90 EHG AD+B	50	32	72	58,5	90	10	M8X1	•

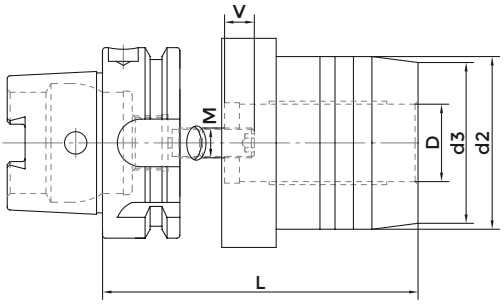

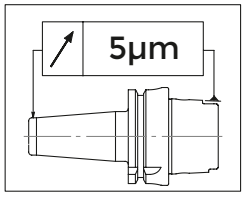

H= 0 > 100 mm - 5 µm

DIN 69893 A+C

COD.	DESCRIPTION	ISO	D	d2	d3	L	V	M	G2.5 25000
252-21797	HSK63A-HC12-80 EHG	63	12	42	32	80	10	M8X1	•
252-21798	HSK63A-HC20-80 EHG	63	20	52,5	38	80	10	M8X1	•
252-21799	HSK100A-HC20-90 EHG	100	20	52,5	38	90	10	M8X1	•
252-31701	HSK100A-HC32-100 EHG	100	32	72	58,5	100	10	M8X1	•

VAR.
MODULAR SYSTEM

BASE TAPER SHANKS

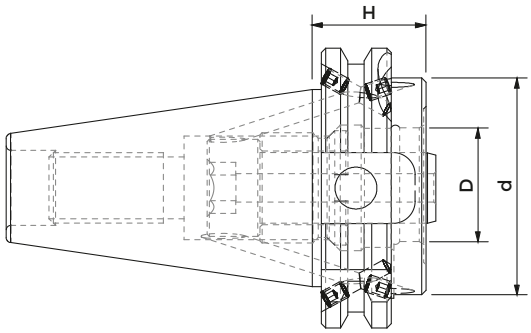

DIN 69871 AD+B

COD.	DESCRIPTION	ISO	H	d	D
280-11301	TC40H27VAR50	40	27	50	27
280-11302	TC40H27VAR63	40	27	63	32
280-11303	TC40H50VAR50	40	50	50	27
280-11304	TC40H50VAR63	40	50	63	32
280-11305	TC50H27VAR50	50	27	50	27
280-11306	TC50H27VAR63	50	27	63	32
280-11307	TC50H27VAR80	50	27	80	32
280-11308	TC50H50VAR50	50	50	50	27
280-11309	TC50H50VAR63	50	50	63	32
280-11310	TC50H50VAR80	50	50	80	32

BASE TAPER SHANKS

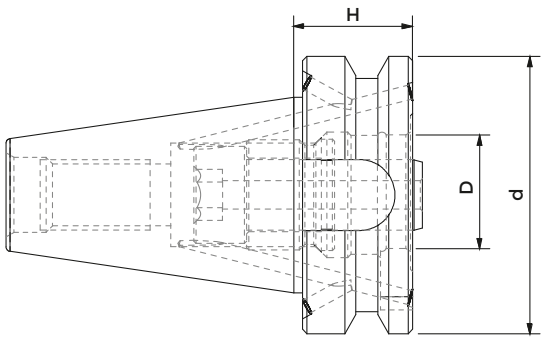

MAS 403/BT AD+B

COD.	DESCRIPTION	ISO	H	d	D
280-11401	BT40H27VAR50	40	27	50	27
280-11402	BT40H27VAR63	40	27	63	32
280-11403	BT40H50VAR50	40	50	50	27
280-11404	BT40H50VAR63	40	50	63	32
280-11405	BT50H38VAR50	50	38	50	27
280-11406	BT50H50VAR50	50	50	50	27
280-11407	BT50H50VAR63	50	50	63	32
280-11408	BT50H50VAR80	50	50	80	32

BASE TAPER SHANKS

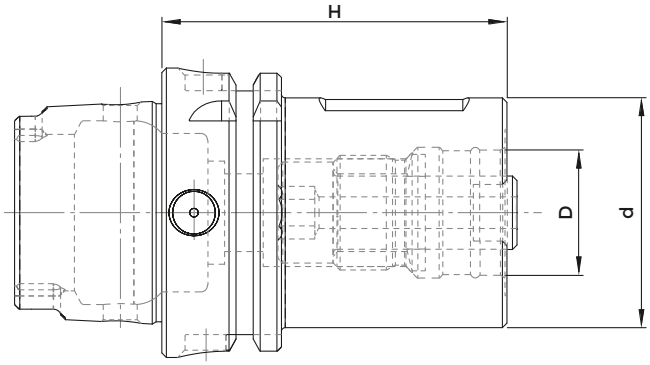

DIN 69893 HSK A

COD.	DESCRIPTION	HSK	H	d	D
280-11801	HSK63AH75VAR50	63	75	50	27
280-11802	HSK63AH85VAR63	63	85	63	32
280-11803	HSK100H80VAR50	100	80	50	27
280-11804	HSK100H90VAR63	100	90	63	32
280-11805	HSK100H90VAR80	100	90	80	32

ER COLLET CHUCK ADAPTERS

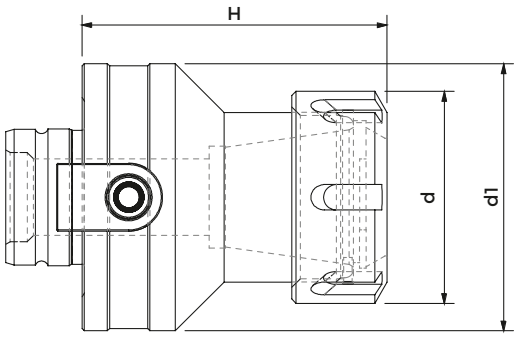

DIN 6469

COD.	DESCRIPTION	H	d	d1
284-36331	VAR50H63ER20	63	35	50
284-36332	VAR50H63ER25	63	42	50
284-36333	VAR50H65ER32	65	50	50
284-36334	VAR63H77ER32	77	50	63
284-36335	VAR63H86ER40	86	63	63
284-36336	VAR80H90ER40	90	63	63

MILL HOLDERS - TENONS DRIVE ADAPTERS

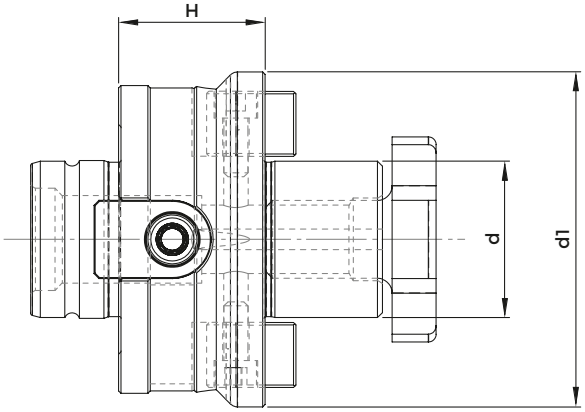

COD.	DESCRIPTION	d1	H	d
217-90601	VAR50H30D16	50	30	16
217-90602	VAR50H20D22	50	20	22
217-90603	VAR50H20D27	50	20	27
217-90604	VAR50H25D32	50	25	32
217-90605	VAR63H30D22	63	30	22
217-90606	VAR63H30D27	63	30	27
217-90607	VAR63H30D32	63	30	32
217-90608	VAR63H30D40	63	30	40
217-90609	VAR80H30D27	80	30	27
217-90610	VAR80H30D32	80	30	32
217-90612	VAR80H30D40	80	30	40

WELDON END MILL HOLDERS ADAPTERS

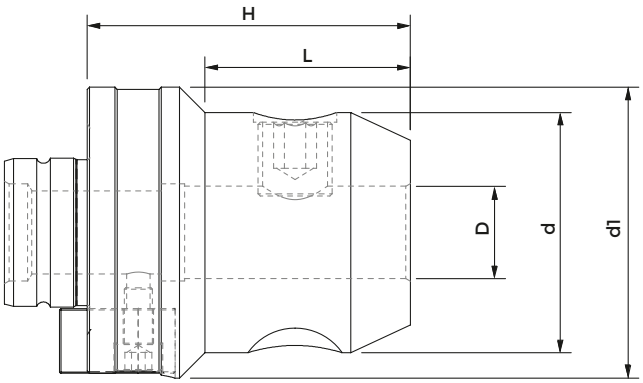

DIN 1835 B

COD.	DESCRIPTION	D	H	d	d1	L
217-90321	VAR50H50WE06	6	50	25	50	25
217-90322	VAR50H50WE08	8	50	28	50	25
217-90323	VAR50H50WE10	10	50	38	50	28
217-90324	VAR50H60WE12	12	60	42	50	36
217-90325	VAR50H60WE14	14	60	44	50	37
217-90326	VAR50H60WE16	16	60	48	50	39
217-90327	VAR50H60WE18	18	60	50	50	45
217-90328	VAR50H60WE20	20	62	52	50	47
217-90329	VAR50H80WE25	25	80	65	50	66
217-90330	VAR63H70WE10	10	70	35	63	36
217-90331	VAR63H70WE12	12	70	42	63	39,5
217-90332	VAR63H70WE14	14	70	44	63	40,5
217-90333	VAR63H70WE16	16	70	48	63	42,5
217-90334	VAR63H70WE18	18	70	50	63	43,5
217-90335	VAR63H70WE20	20	70	52	63	44,5
217-90336	VAR63H80WE25	25	80	62	63	59,5
217-90337	VAR63H80WE32	32	80	63	63	64,5
217-90338	VAR63H90WE40	40	90	80	63	70
217-90339	VAR80H70WE16	16	70	48	80	32
217-90340	VAR80H70WE20	20	70	52	80	34
217-90341	VAR80H80WE25	25	80	65	80	50,5
217-90342	VAR80H80WE32	32	80	72	80	54
217-90343	VAR80H90WE40	40	90	79	80	67,5

EXTENSIONS

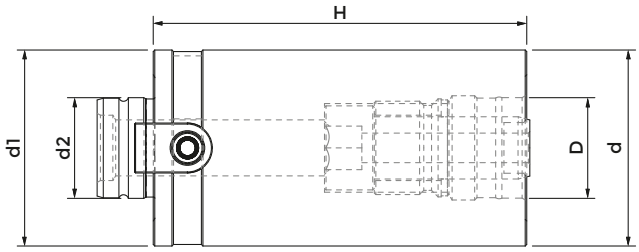

COD.	DESCRIPTION	d	H	D	d1	d2
281-26401	VAR50H60VAR50	50	60	27	50	27
281-26402	VAR50H80VAR50	50	80	27	50	27
281-26403	VAR50H100VAR50	50	100	27	50	27
281-26404	VAR63H80VAR63	63	80	32	63	32
281-26405	VAR63H120VAR63	63	120	32	63	32
281-26406	VAR80H80VAR80	80	80	32	80	32
281-26407	VAR80H100VAR80	80	100	32	80	32
281-26408	VAR80H120VAR80	80	120	32	80	32
281-26409	VAR80H140VAR80	80	140	32	80	32
281-26410	VAR80H160VAR80	80	160	32	80	32

REDUCERS

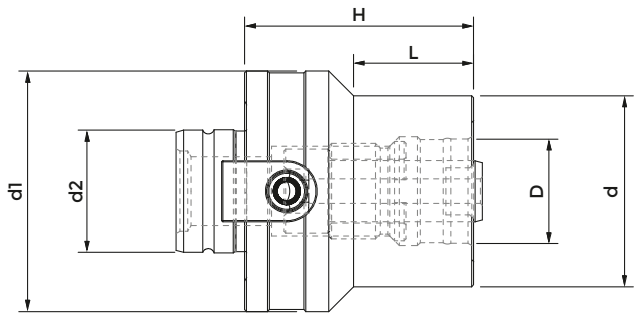

COD.	DESCRIPTION	d1	H	L	d	d2	D
217-90214	VAR63H60VAR50	63	60	31,5	50	32	27
217-90215	VAR80H80VAR63	80	80	49,5	63	32	32

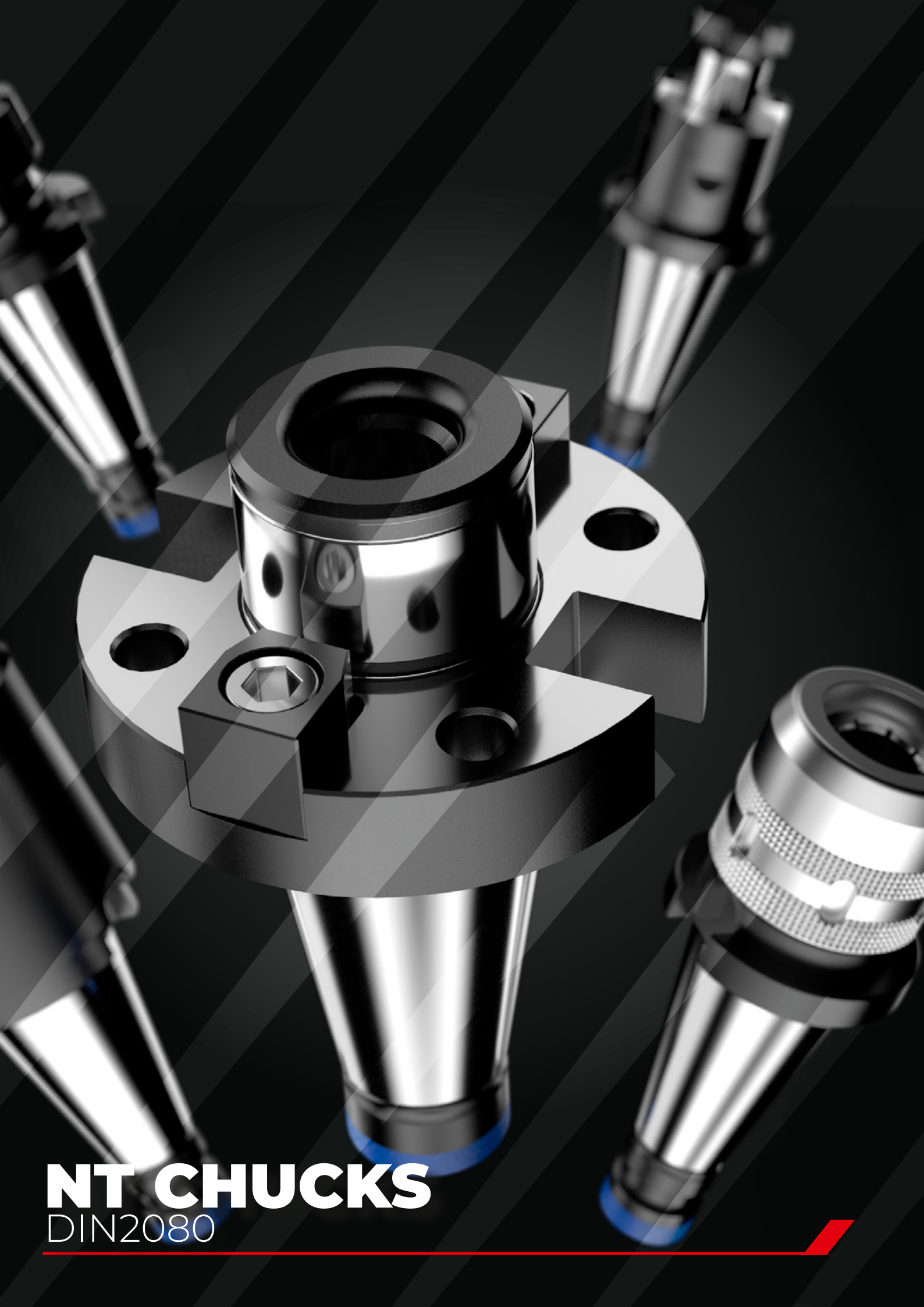

NT CHUCKS
DIN2080

TAPER SHANKS DATA SHEET

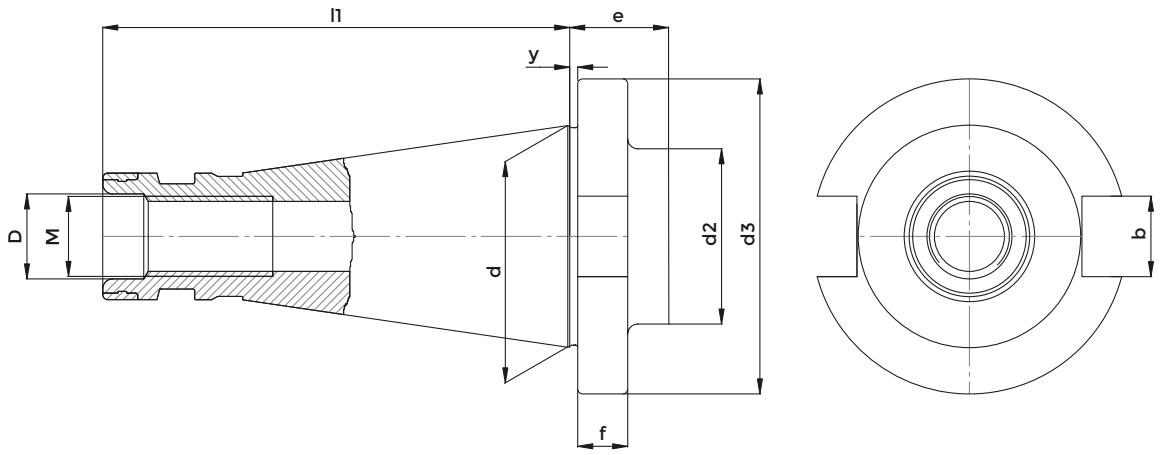

DIN2080

ISO	d	l1	D	M	y	d2	f	d3	e	b
30	31,75	68,4	13	M12	1,6	36	8	50	18,6	16,1
40	44,45	93,4	17	M16	1,6	50	10	63	22,6	16,1
50	69,85	126,8	26	M24	3,2	78	12	97,5	31,2	25,7

TECHNICAL FEATURES KINTEK ISO TOOLHOLDERS

All Kintek Toolholders are manufactured according to DIN norm.

COLLET CHUCK RUNOUT ACCURACY

The norm DIN6391 permits a runout error between external cone and internal cone / collet seat of 0.016. Our production has a runout accuracy which is guaranteed to be within 0,003 / 0,010 m at the tool seat.

SHELL END MILL ADAPTOR RUNOUT ACCURACY

Our shell end mill adaptors meet the requirements of the norm DIN6358, which prescribes for diameters 16-22-27-32-40 a runout accuracy of: 0, 01 for SK 30/40 0,015 for SK 50.

WELDON END MILL HOLDER RUNOUT ACCURACY

According to the norm DIN6359-1 Weldon end mill holders have to meet the following requirements:
BORE: tolleranza H5
RUNOUT ACCURACY: < 0.01 (for SK 40)
Our end mill adaptors ensure the prescribed holes' tolerance and have a runout accuracy which is normally 0.005

CONSTRUCTIVE FEATURES

- Manufactured with Casehardening Steel.
- Casehardened with depth 0,6 - 0,8 mm
- Hardened-Tempered
- Hardness HRC 58+-2, Strength 800-1000 N/mm²
- Black oxided
- Internal and external grinding finished.

CONE TOLERANCE

ACCORDING TO THE CLASS AT3.

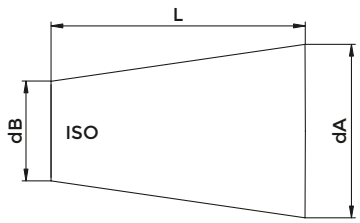

ISO	L	dA-dB	AT3
30	42	12.250	+0.002
40	59	17.208	+0.003
50	92	26.833	+0.004

SHORT TYPE END MILL HOLDERS

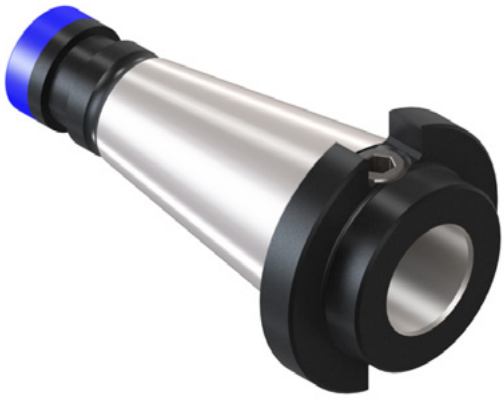

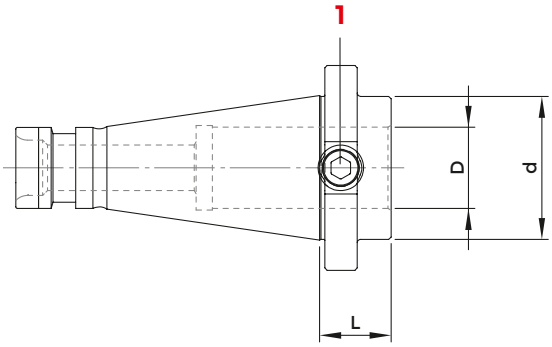

DIN 2080 - DIN 1835 B

COD.	DESCRIPTION	ISO	D	L	d	G6,3 8000	1 STOP SCREW
3090	ISO 40 - WE 16 / H 22	40	16	22	48	•	0068
3091	ISO 40 - WE 20 / H 22	40	20	22	48	•	811-106032
3092	ISO 40 - WE 25 / H 22	40	25	22	48	•	0073
3109	ISO 40 - WE 32 / H 40	40	32	40	44	•	0074
3093	ISO 50 - WE 16 / H 20	50	16	20	48	•	0400
3094	ISO 50 - WE 20 / H 20	50	20	20	48	•	811-106007
3095	ISO 50 - WE 25 / H 20	50	25	20	65	•	811-106042
3096	ISO 50 - WE 32 / H 35	50	32	35	72	•	811-106009

WELDON END MILL HOLDERS

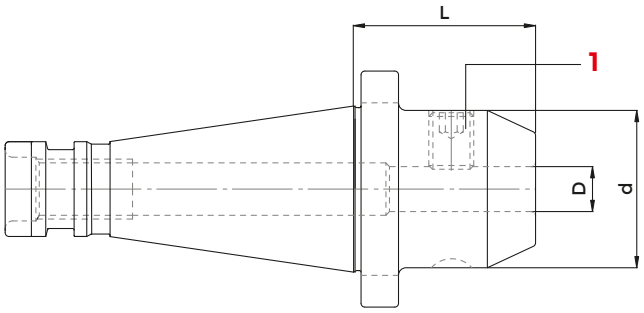

DIN 2080 - DIN 1835 B

COD.	DESCRIPTION	ISO	D	L	d	G6,3 8000	1 STOP SCREW
4442	ISO 30 - WE 6 / H 40	30	6	40	25	•	811-106001
4443	ISO 30 - WE 8 / H 40	30	8	40	28	•	811-106002
4444	ISO 30 - WE 10 / H 40	30	10	40	35	•	811-106004
4445	ISO 30 - WE 12 / H 40	30	12	40	42	•	811-106005
4447	ISO 30 - WE 16 / H 50	30	16	50	48	•	811-106006
4449	ISO 30 - WE 20 / H 63	30	20	63	52	•	811-106007
4450	ISO 30 - WE 25 / H 75	30	25	75	65	•	811-106008
213-11102	ISO 40 - WE 6 / H 50	40	6	50	25	•	811-106001
213-11103	ISO 40 - WE 8 / H 50	40	8	50	28	•	811-106002
213-11104	ISO 40 - WE 10 / H 50	40	10	50	35	•	811-106004
213-11105	ISO 40 - WE 12 / H 50	40	12	50	42	•	811-106005
3610	ISO 40 - WE 14 / H 50	40	14	50	44	•	811-106005
213-11107	ISO 40 - WE 16 / H 63	40	16	63	48	•	811-106006
213-11109	ISO 40 - WE 20 / H 63	40	20	63	52	•	811-106007
213-11110	ISO 40 - WE 25 / H 90	40	25	90	64	•	811-106008
213-11111	ISO 40 - WE 32 / H 90	40	32	90	72	•	811-106009
3312	ISO 40 - WE 40 / H 90	40	40	90	80	•	811-106009
3655	ISO 50 - WE 6 / H 50	50	6	50	25	•	811-106001
3656	ISO 50 - WE 8 / H 50	50	8	50	28	•	811-106002
3657	ISO 50 - WE 10 / H 63	50	10	63	35	•	811-106004
213-11115	ISO 50 - WE 12 / H 63	50	12	63	42	•	811-106005
213-11117	ISO 50 - WE 16 / H 63	50	16	63	48	•	811-106006
213-11119	ISO 50 - WE 20 / H 63	50	20	63	52	•	811-106007
213-11120	ISO 50 - WE 25 / H 80	50	25	80	64	•	811-106008
213-11121	ISO 50 - WE 32 / H 85	50	32	85	72	•	811-106009
213-11122	ISO 50 - WE 40 / H 95	50	40	95	78	•	811-106009

FACE MILL HOLDERS TENONS DRIVE

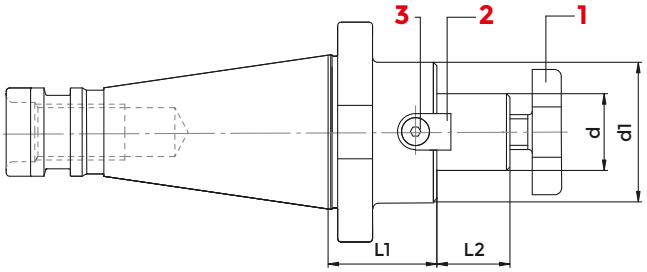

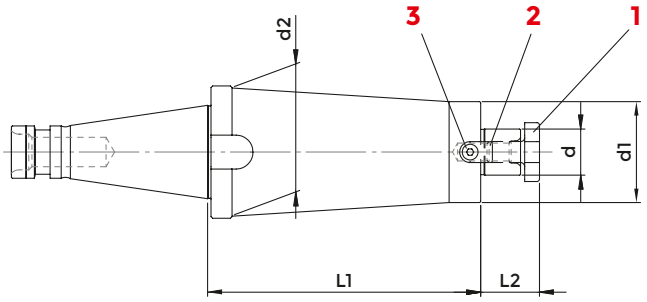

DIN 2080 - ISO 3937

COD.	DESCRIPTION	ISO	d	L1	L2	d1	d2	G6,3 8000	1 CROSS SCREW	2 TENON	3 SCREW	WRENCH
5498	ISO 30 - D.13 FISSO / H 35	30	13	35	12	28	-	•	811-101027	7433	811-101003	-
4200	ISO 30 - D.16 FISSO / H 35	30	16	35	17	38	-	•	811-107003	814-202280	811-101004	816-130002
4201	ISO 30 - D.22 FISSO / H 35	30	22	35	19	48	-	•	811-107004	814-202250	811-101011	816-130003
4202	ISO 30 - D.27 FISSO / H 35	30	27	35	21	58	-	•	811-107005	814-202270	811-101018	816-130004
216-71105	ISO 40 - D.16 FISSO / H 45	40	16	45	17	38	-	•	811-107003	814-202280	811-101004	816-130002
9800	ISO 40 - D.16 FISSO / H 100	40	16	100	17	38	-	•	811-107003	814-202280	811-101004	816-130002
5501	ISO 40 - D.16 FISSO / H 130	40	16	130	17	38	-	•	811-107003	814-202280	811-101004	816-130002
216-71106	ISO 40 - D.22 FISSO / H 45	40	22	45	19	48	-	•	811-107004	814-202250	811-101011	816-130003
9801	ISO 40 - D.22 FISSO / H 100	40	22	100	19	48	-	•	811-107004	814-202250	811-101011	816-130003
5503	ISO 40 - D.22 FISSO / H 130	40	22	130	19	48	61	•	811-107004	814-202250	811-101011	816-130003
216-71107	ISO 40 - D.27 FISSO / H 45	40	27	45	21	58	-	•	811-107005	814-202270	811-101018	816-130004
9802	ISO 40 - D.27 FISSO / H 100	40	27	100	21	58	-	•	811-107005	814-202270	811-101018	816-130004
5505	ISO 40 - D.27 FISSO / H 130	40	27	130	21	58	-	•	811-107005	814-202270	811-101018	816-130004
216-71108	ISO 40 - D.32 FISSO / H 50	40	32	50	24	78	-	•	811-107006	814-202630	811-101029	816-130005
9803	ISO 40 - D.32 FISSO / H 100	40	32	100	24	66	-	•	811-107006	814-202290	0207	816-130005
5507	ISO 40 - D.32 FISSO / H 130	40	32	130	24	66	-	•	811-107006	814-202290	0207	816-130005
216-71109	ISO 40 - D.40 FISSO / H 55	40	40	55	27	88	-	•	811-107007	814-202710	811-101029	816-130006
216-71115	ISO 50 - D.16 FISSO / H 45	50	16	45	17	38	-	•	811-107003	814-202280	811-101004	816-130002
9805	ISO 50 - D.16 FISSO / H 100	50	16	100	17	38	-	•	811-107003	814-202280	811-101004	816-130002
5510	ISO 50 - D.16 FISSO / H 160	50	16	160	17	38	-	•	811-107003	814-202280	811-101004	816-130002
216-71116	ISO 50 - D.22 FISSO / H 45	50	22	45	19	48	-	•	811-107004	814-202250	811-101011	816-130003
9806	ISO 50 - D.22 FISSO / H 100	50	22	100	19	48	-	•	811-107004	814-202250	811-101011	816-130003
5512	ISO 50 - D.22 FISSO / H 160	50	22	160	19	48	-	•	811-107004	814-202250	811-101011	816-130003
216-71117	ISO 50 - D.27 FISSO / H 45	50	27	45	21	58	-	•	811-107005	814-202270	811-101018	816-130004
9807	ISO 50 - D.27 FISSO / H 100	50	27	100	21	58	-	•	811-107005	814-202270	811-101018	816-130004
216-71147	ISO 50 - D.27 FISSO / H 160	50	27	160	21	58	-	•	811-107005	814-202270	811-101018	816-130004
216-71118	ISO 50 - D.32 FISSO / H 50	50	32	50	24	78	-	•	811-107006	814-202630	811-101029	816-130005
9808	ISO 50 - D.32 FISSO / H 100	50	32	100	24	66	-	•	811-107006	814-202290	0207	816-130005
5516	ISO 50 - D.32 FISSO / H 160	50	32	160	24	66	-	•	811-107006	814-202290	0207	816-130005
216-71119	ISO 50 - D.40 FISSO / H 50	50	40	50	40	88	-	•	811-107007	814-202710	811-101029	816-130006
9809	ISO 50 - D.40 FISSO / H 100	50	40	100	40	88	-	•	811-107007	814-202710	811-101029	816-130006
5518	ISO 50 - D.40 FISSO / H 160	50	40	160	40	88	-	•	811-107007	814-202710	811-101029	816-130006

ACCESSORIES

p. 693

p. 695

p. 694

COMBI-SHELL MILL HOLDERS

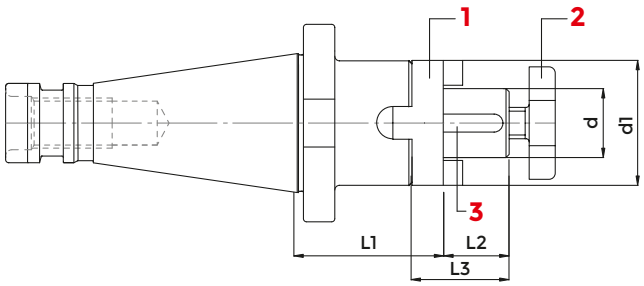

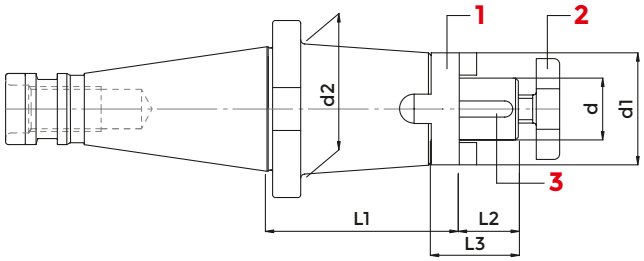

DIN 2080 - DIN 6358

COD.	DESCRIPTION	ISO	d	L1	L2	L3	d1	d2	G6,3 8000	1 COUPLING RING	2 CROSS SCREW	3 KEY	WRENCH
3878	ISO 30 - D.16 COMBI / H 35	30	16	35	17	27	32	-	•	814-30001	811-107003	814-201010	816-130002
3879	ISO 30 - D.22 COMBI / H 35	30	22	35	19	31	40	-	•	814-30002	811-107004	814-201020	816-130003
3880	ISO 30 - D.27 COMBI / H 35	30	27	35	21	33	48	-	•	814-30003	811-107005	814-201030	816-130004
3881	ISO 30 - D.32 COMBI / H 50	30	32	50	24	38	58	-	•	814-30004	811-107006	814-201040	816-130005
216-11101	ISO 40 - D.16 COMBI / H 52	40	16	52	17	27	32	-	•	814-30001	811-107003	814-201010	816-130002
216-11120	ISO 40 - D.16 COMBI / H 100	40	16	100	17	27	32	40	•	814-30001	811-107003	814-201010	816-130002
216-11102	ISO 40 - D.22 COMBI / H 52	40	22	52	19	31	40	-	•	814-30002	811-107004	814-201020	816-130003
216-11121	ISO 40 - D.22 COMBI / H 100	40	22	100	19	31	40	44	•	814-30002	811-107004	814-201020	816-130003
216-11103	ISO 40 - D.27 COMBI / H 52	40	27	52	21	33	48	-	•	814-30003	811-107005	814-201030	816-130004
216-11122	ISO 40 - D.27 COMBI / H 100	40	27	100	21	33	48	-	•	814-30003	811-107005	814-201030	816-130004
216-11104	ISO 40 - D.32 COMBI / H 52	40	32	52	24	38	58	-	•	814-30004	811-107006	814-201040	816-130005
4192	ISO 40 - D.32 COMBI / H 100	40	32	100	24	38	58	-	•	814-30004	811-107006	814-201040	816-130005
216-11105	ISO 40 - D.40 COMBI / H 52	40	40	52	27	41	70	-	•	814-30005	811-107007	814-201050	816-130006
3822	ISO 50 - D.16 COMBI / H 55	50	16	55	17	27	32	-	•	814-30001	811-107003	814-201010	816-130002
216-11125	ISO 50 - D.16 COMBI / H 100	50	16	100	17	27	32	50	•	814-30001	811-107003	814-201010	816-130002
216-11107	ISO 50 - D.22 COMBI / H 55	50	22	55	19	31	40	-	•	814-30002	811-107004	814-201020	816-130003
216-11126	ISO 50 - D.22 COMBI / H 100	50	22	100	19	31	40	60	•	814-30002	811-107004	814-201020	816-130003
216-11108	ISO 50 - D.27 COMBI / H 55	50	27	55	21	33	48	-	•	814-30003	811-107005	814-201030	816-130004
216-11127	ISO 50 - D.27 COMBI / H 100	50	27	100	21	33	48	60	•	814-30003	811-107005	814-201030	816-130004
3825	ISO 50 - D.32 COMBI / H 55	50	32	55	24	38	58	-	•	814-30004	811-107006	814-201040	816-130005
216-11128	ISO 50 - D.32 COMBI / H 100	50	32	100	24	38	58	-	•	814-30004	811-107006	814-201040	816-130005
3826	ISO 50 - D.40 COMBI / H 55	50	40	55	27	41	70	-	•	814-30005	811-107007	814-201050	816-130006
216-11129	ISO 50 - D.40 COMBI / H 100	50	40	100	27	41	70	-	•	814-30005	811-107007	814-201050	816-130006

ACCESSORIES

p. 694

p. 693

p. 694

MILL HOLDERS WITH FEATHER KEY

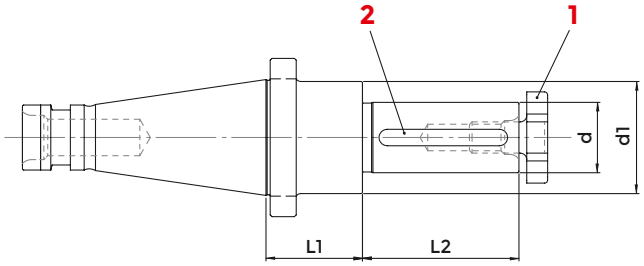

DIN 2080 - DIN 6360

COD.	DESCRIPTION	ISO	d	L1	L2	d1	G6,3 8000	1 CROSS SCREW	2 KEY	WRENCH
0134	ISO 30 - D.16 CHT	30	16	35	30	28	•	811-107003	0147	816-130002
0135	ISO 30 - D.22 CHT	30	22	35	40	36	•	811-107004	0148	816-130003
0136	ISO 30 - D.27 CHT	30	27	35	60	43	•	811-107005	0149	816-130004
4205	ISO 40 - D.16 CHT	40	16	37	30	28	•	811-107003	0147	816-130002
4207	ISO 40 - D.22 CHT	40	22	37	40	36	•	811-107004	0148	816-130003
4209	ISO 40 - D.27 CHT	40	27	37	60	43	•	811-107005	0149	816-130004
4211	ISO 40 - D.32 CHT	40	32	37	60	48	•	811-107006	0150	816-130005
4222	ISO 50 - D.40 CHT	50	40	40	60	58	•	811-107007	0151	816-130006

ACCESSORIES

p. 693

p. 694

FACE MILL HOLDER FOR FACE MILLING CUTTERS

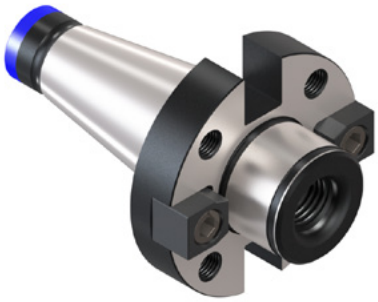

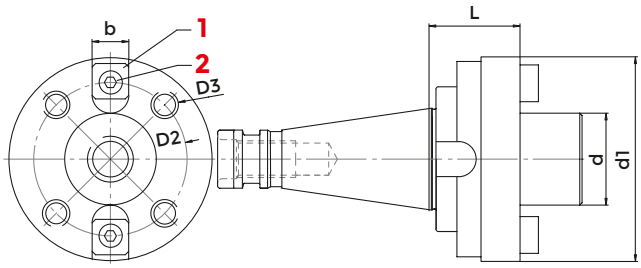

DIN 2080 - DIN 6357

COD.	DESCRIPTION	ISO	d	L	d1	D2	D3	b	G6,3 8000	1 CROSS SCREW	2 SCREW	TENON
4223	ISO 40 - D. 40 FM	40	40	20	89	66,7	M 12	15,9	•	811-107007	0207	814-202080
4225	ISO 40 - D. 60 FM	40	60	30	129	101,6	M 16	25,4	•	-	811-101064	814-202120
216-21102	ISO 50 - D. 40 FM	50	40	30	89	66,7	M 12	15,9	•	811-107007	0207	814-202080
216-21104	ISO 50 - D. 60 FM	50	60	30	129	101,6	M 16	25,4	•	-	811-101064	814-202120

ACCESSORIES

p. 695

p. 693

CENTERING DEVICE FOR INSERTS MILLING CUTTERS

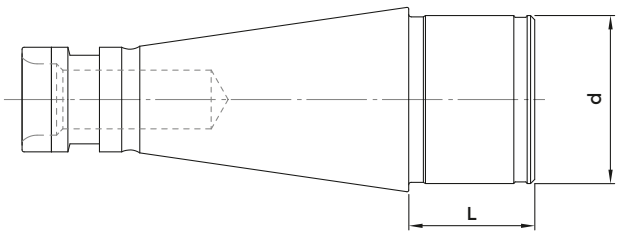

DIN 2080

COD.	DESCRIPTION	ISO	d	L	G6,3 8000
4012	ISO 40 - D. 40 CF	40	40	29	•
4025	ISO 50 - D. 60 CF	50	60	39	•

INDEXABLE MORSE TAPER DRILL HOLDERS

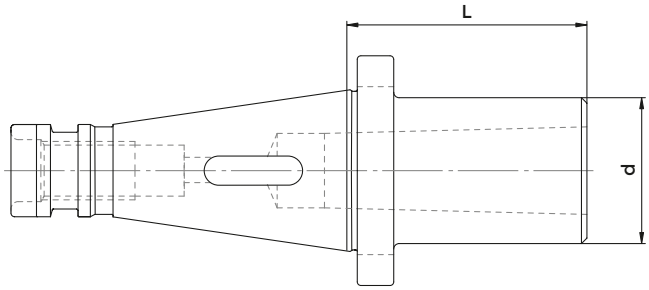

DIN 2080

COD.	DESCRIPTION	ISO	MORSE	d	L	G6,3 8000
8517	ISO 30 - CM 1 PUNTE	30	1	25	60	•
3873	ISO 30 - CM 2 PUNTE	30	2	32	60	•
3874	ISO 30 - CM 3 PUNTE	30	3	40	70	•
8518	ISO 40 - CM 1 PUNTE	40	1	25	50	•
212-41102	ISO 40 - CM 2 PUNTE	40	2	32	50	•
212-41103	ISO 40 - CM 3 PUNTE	40	3	40	65	•
212-41104	ISO 40 - CM 4 PUNTE	40	4	48	95	•
8523	ISO 50 - CM 1 PUNTE	50	1	25	45	•
212-41105	ISO 50 - CM 2 PUNTE	50	2	32	60	•
212-41106	ISO 50 - CM 3 PUNTE	50	3	40	65	•
212-41107	ISO 50 - CM 4 PUNTE	50	4	48	70	•
212-41108	ISO 50 - CM 5 PUNTE	50	5	63	100	•

END MILL HOLDERS FOR MORSE TAPER CUTTERS

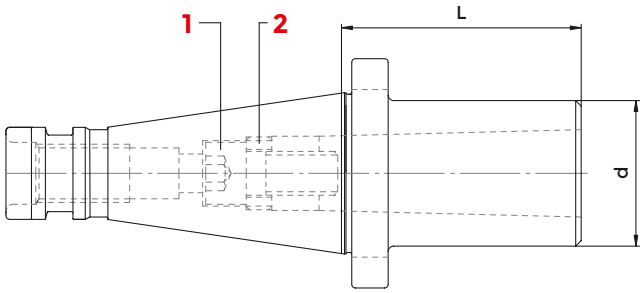

DIN 2080

COD.	DESCRIPTION	ISO	MORSE	d	L	G6,3 8000	1 SCREW	2 LEFT NUT	WRENCH
							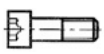		
3876	ISO 30 - CM 2 FRESE	30	2	32	60	•	811-111007	811-302031	816-20205002
3877	ISO 30 - CM 3 FRESE	30	3	40	80	•	7402	811-302032	816-20206002
212-21102	ISO 40 - CM 2 FRESE	40	2	32	50	•	811-111007	811-302031	816-20205002
212-21103	ISO 40 - CM 3 FRESE	40	3	40	65	•	7403	811-302032	816-20206002
212-21104	ISO 40 - CM 4 FRESE	40	4	48	95	•	7404	811-302036	816-20207002
3626	ISO 50 - CM 2 FRESE	50	2	32	60	•	811-111007	811-302031	816-20205002
212-21106	ISO 50 - CM 3 FRESE	50	3	40	65	•	7403	811-302032	816-20206002
212-21107	ISO 50 - CM 4 FRESE	50	4	48	65	•	7407	811-302036	816-20207002
212-21108	ISO 50 - CM 5 FRESE	50	5	63	120	•	7408	811-302034	816-20208002

COMBI MORSE TAPER HOLDERS FOR DRILLS AND MILLING CUTTERS

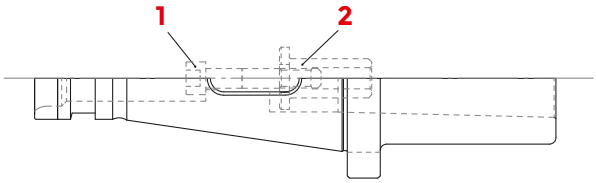

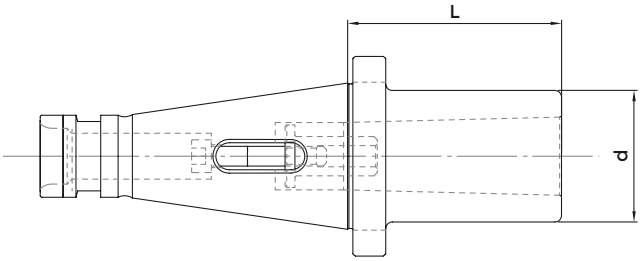

DIN 2080

COD.	DESCRIPTION	ISO	MORSE	d	L	G6,3 8000	1 SCREW	2 REDUCER
3612	ISO 40 - CM 1 P + F	40	1	25	50	•	7400	-
3613	ISO 40 - CM 2 P + F	40	2	32	50	•	7401	-
8532	ISO 40 - CM 3 P + F	40	3	40	65	•	7400	811-302006
3616	ISO 50 - CM 1 P + F	50	1	25	45	•	7400	-
3617	ISO 50 - CM 2 P + F	50	2	32	60	•	7405	-
3618	ISO 50 - CM 3 P + F	50	3	40	65	•	811-101070	-
8533	ISO 50 - CM 4 P + F	50	4	48	70	•	7409	-

COMBI MORSE TAPER HOLDERS FOR DRILLS AND MILLING CUTTERS - LONG TYPE

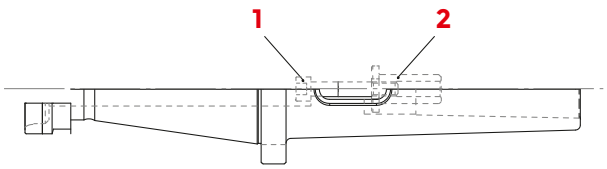

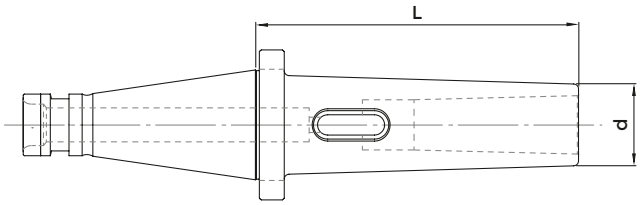

DIN 2080

COD. DRILLS	COD. DRILLS + MILLING CUTTERS	DESCRIPTION	ISO	MORSE	d	L	G6,3 8000	1 SCREW	2 REDUCER
8521	3545	ISO 40 - CM 2	40	2	25	110	•	7401	-
8522	3546	ISO 40 - CM 3	40	3	33	130	•	7400	811-302006
3548	-	ISO 40 - CM 4	40	4	40	150	•	-	-
8528	212-61119	ISO 50 - CM 3	50	3	33	150	•	811-101079	-
8529	3788	ISO 50 - CM 4	50	4	40	180	•	0042	-
8530	-	ISO 50 - CM 5	50	5	55	220	•	-	-

ADAPTER FROM NT TO NT/SK/BT

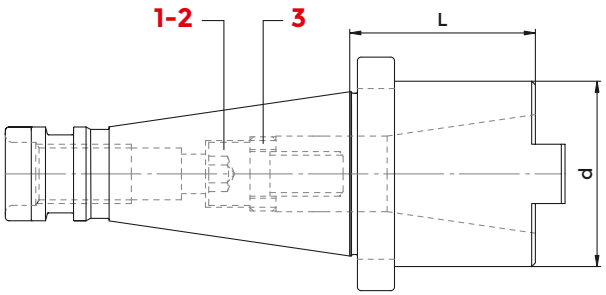

DIN 2080 - DIN 6357

COD.	DESCRIPTION	ISO	ISO	d	L	G6,3 8000	1 SCREW DIN 2080	2 SCREW BT DIN 69871	3 NUT	WRENCH
4235	ISO 40 - ISO 30 / TC 30 / BT 30	40	30	50	50	•	811-101065	0177	811-302032	816-20206002
212-11101	ISO 50 - ISO 40 / TC 40 / BT 40	50	40	68	63	•	811-401147	811-401150	811-302036	816-20207002

* included in the supply

ADAPTER/REDUCERS FROM NT TO NT

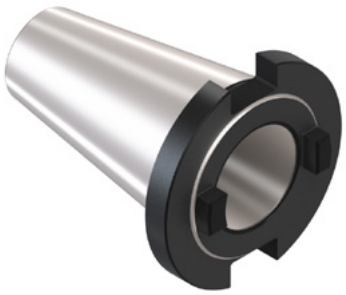

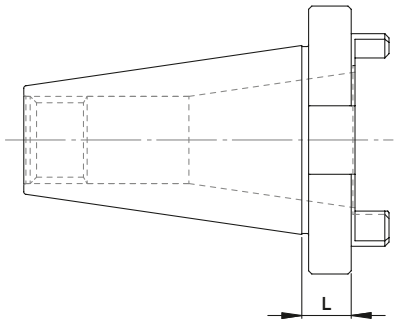

DIN 2080

COD.	DESCRIPTION	ISO	ISO	L	G6,3 8000
8828	ISO 40 - IP 30	40	30	12	•
8829	ISO 50 - IP 40	50	40	16	•

ER COLLET CHUCK WITH MINI NUT

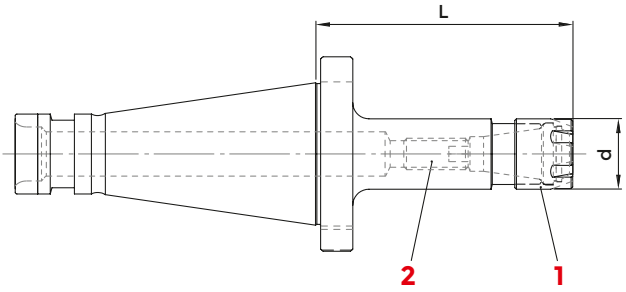

DIN 2080

COD.	DESCRIPTION	ISO	ER	d	L	G6,3 8000	1 NUT	2 SCREW	WRENCH	COLLET
2957	ISO 30 - ER16 GM	30	ER 16 1÷12	22	70	•	1229	811-102030	816-203009	ER16
2959	ISO 40 - ER16 GM	40	ER 16 1÷12	22	80	•	1229	811-102038	816-203009	ER16
2960	ISO 40 - ER20 GM	40	ER 20 1÷15	28	90	•	1230	811-106005	816-203010	ER20

ACCESSORIES

p. 648

p. 631

p. 652

ER COLLET CHUCK WITH HEXAGONAL NUT

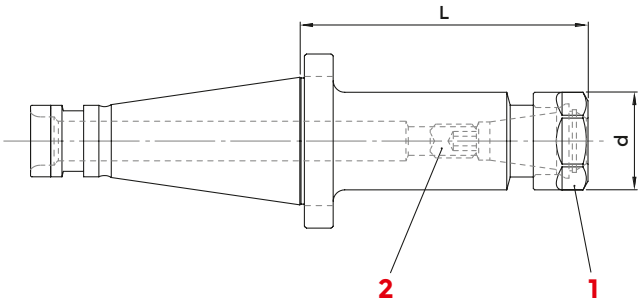

DIN 2080

COD.	DESCRIPTION	ISO	ER	d	L	G6,3 8000	1 NUT	2 SCREW	WRENCH	COLLET
8333	ISO 30 - ER 20 GE / H 50	30	ER 20 1÷15	34	50	•	812-203010	811-102030	816-203013	ER20
8334	ISO 40 - ER 16 GE / H 50	40	ER 16 1÷12	28	50	•	812-203009	811-102038	816-203012	ER16
8335	ISO 40 - ER 16 GE / H100	40	ER 16 1÷12	28	100	•	812-203009	811-102038	816-203012	ER16
8336	ISO 40 - ER 20 GE / H 50	40	ER 20 1÷15	34	50	•	812-203010	811-106005	816-203013	ER20
8337	ISO 40 - ER 20 GE / H100	40	ER 20 1÷15	34	100	•	812-203010	811-106005	816-203013	ER20

ACCESSORIES

p. 649

p. 631

p. 653

ER COLLET CHUCKS

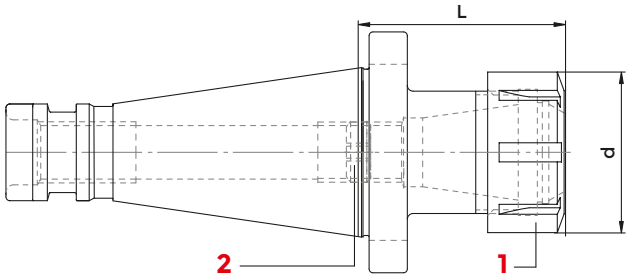

DIN 2080 - DIN 6499 / ISO 15488

COD.	DESCRIPTION	ISO	ER	d	L	G6,3 8000	1 NUT	2 SCREW	WRENCH	COLLET
214-31105	ISO 30 - ER 16 / H 50	30	ER 16 1÷12	32	50	•	812-203005	811-102030	816-203000	ER16
2945	ISO 30 - ER 20 / H 50	30	ER 20 1÷15	35	50	•	812-203006	811-102030	816-203005	ER20
214-31106	ISO 30 - ER 25 / H 40	30	ER 25 1÷20	42	40	•	812-203001	0190	816-203001	ER25
2946	ISO 30 - ER 25 / H 75	30	ER 25 1÷20	42	75	•	812-203001	0190	816-203001	ER25
214-31107	ISO 30 - ER 32 / H 50	30	ER 32 2÷25	50	50	•	812-203002	811-303118	816-203002	ER32
3986	ISO 30 - ER 32 / H 70	30	ER 32 2÷25	50	70	•	812-203002	811-303118	816-203002	ER32
ISO30H100ER32	ISO 30 - ER 32 / H 100	30	ER 32 2÷25	50	100	•	812-203002	811-303118	816-203002	ER32
3543	ISO 30 - ER 40 / H 75	30	ER 40 3÷32	63	75	•	812-203003	811-303118	816-203003	ER40
3990	ISO 30 - ER 40 / H 100	30	ER 40 3÷32	63	100	•	812-203003	811-303118	816-203003	ER40
214-31152	ISO 40 - ER 16 / H 50	40	ER 16 1÷12	32	50	•	812-203005	811-102038	816-203000	ER16
3941	ISO 40 - ER 16 / H 100	40	ER 16 1÷12	32	100	•	812-203005	811-102038	816-203000	ER16
2950	ISO 40 - ER 20 / H 50	40	ER 20 1÷15	35	50	•	812-203006	811-106005	816-203005	ER20
2796	ISO 40 - ER 20 / H 100	40	ER 20 1÷15	35	100	•	812-203006	811-106005	816-203005	ER20
214-31101	ISO 40 - ER 25 / H 50	40	ER 25 1÷20	42	50	•	812-203001	0190	816-203001	ER25
214-31108	ISO 40 - ER 25 / H 100	40	ER 25 1÷20	42	100	•	812-203001	0190	816-203001	ER25
2929	ISO 40 - ER 32 / H 50	40	ER 32 2÷25	50	50	•	812-203002	811-303118	816-203002	ER32
214-31102	ISO 40 - ER 32 / H 70	40	ER 32 2÷25	50	70	•	812-203002	811-303118	816-203002	ER32
214-31109	ISO 40 - ER 32 / H 100	40	ER 32 2÷25	50	100	•	812-203002	811-303118	816-203002	ER32
2827	ISO 40 - ER 32 / H 130	40	ER 32 2÷25	50	130	•	812-203002	811-303118	816-203002	ER32
2952	ISO 40 - ER 32 / H 160	40	ER 32 2÷25	50	160	•	812-203002	811-303118	816-203002	ER32
2930	ISO 40 - ER 40 / H 50	40	ER 40 3÷32	63	50	•	812-203003	0195	816-203003	ER40
214-31114	ISO 40 - ER 40 / H 70	40	ER 40 3÷32	63	70	•	812-203003	0195	816-203003	ER40
2992	ISO 40 - ER 40 / H 100	40	ER 40 3÷32	63	100	•	812-203003	0195	816-203003	ER40
2953	ISO 40 - ER 50 / H 100	40	ER 50 6÷36	78	100	•	812-203007	0195	816-203004	ER50
214-31137	ISO 50 - ER 25 / H 65	50	ER 25 1÷20	42	65	•	812-203001	0190	816-203001	ER25
2831	ISO 50 - ER 25 / H 100	50	ER 25 1÷20	42	100	•	812-203001	0190	816-203001	ER25
2885	ISO 50 - ER 25 / H 140	50	ER 25 1÷20	42	140	•	812-203001	0190	816-203001	ER25
214-31103	ISO 50 - ER 32 / H 70	50	ER 32 2÷25	50	70	•	812-203002	811-303118	816-203002	ER32
2955	ISO 50 - ER 32 / H 100	50	ER 32 2÷25	50	100	•	812-203002	811-303118	816-203002	ER32
214-31110	ISO 50 - ER 32 / H 140	50	ER 32 2÷25	50	140	•	812-203002	811-303118	816-203002	ER32
214-31104	ISO 50 - ER 40 / H 75	50	ER 40 3÷32	63	75	•	812-203003	0195	816-203003	ER40
2458	ISO 50 - ER 40 / H 100	50	ER 40 3÷32	63	100	•	812-203003	0195	816-203003	ER40
214-31111	ISO 50 - ER 40 / H 140	50	ER 40 3÷32	63	140	•	812-203003	0195	816-203003	ER40
2932	ISO 50 - ER 50 / H 70	50	ER 50 6÷36	78	70	•	812-203007	0195	816-203004	ER50

ACCESSORIES

p. 649

p. 631

p. 653

EQUIPMENT CASE WITH REDUCED SET OF ER COLLETS, COLLET CHUCK AND WRENCH

COD.	DESCRIPTION	ISO	CHUCK	CASE	WRENCH	COLLET
7516	KIT Rid ISO 30/ H 40 - ER 25	30	214-31106	7022	816-203001	ER25: Ø 4 - 6 - 8 -10 -12 -16
7517	KIT Rid ISO 30/ H 50 - ER 32	30	214-31107	7023	816-203002	ER32: Ø 4 - 6 - 8 -10 -12 -16 - 20
7518	KIT Rid ISO 40/ H 50 - ER 25	40	214-31101	7022	816-203001	ER25: Ø 4 - 6 - 8 -10 -12 -16
7519	KIT Rid ISO 40/ H 50 - ER 32	40	2929	7023	816-203002	ER32: Ø 4 - 6 - 8 -10 -12 -16 - 20
7520	KIT Rid ISO 40/ H 70 - ER 32	40	214-31102	7023	816-203002	ER32: Ø 4 - 6 - 8 -10 -12 -16 - 20
7521	KIT Rid ISO 40/ H 50 - ER 40	40	2930	7024	816-203003	ER40: Ø 4 - 6 - 8 -10 -12 -16 - 20 -25
7522	KIT Rid ISO 50/ H 70 - ER 32	50	214-31103	7023	816-203002	ER32: Ø 4 - 6 - 8 -10 -12 -16 - 20
7523	KIT Rid ISO 50/ H 75 - ER 40	50	214-31104	7024	816-203003	ER40: Ø 4 - 6 - 8 -10 -12 -16 - 20 -25

EQUIPMENT CASE WITH COMPLETE SET OF ER COLLETS, AD SHAPE COLLET CHUCK AND WRENCH

COD.	DESCRIPTION	ISO	CHUCK	CASE	WRENCH	COLLET
7500	KIT ISO 30/ H 40 - ER25	30	214-31106	7022	3669	ER25: Ø 2 ÷ 16 (15 Pinze)
7501	KIT ISO 30/ H 50 - ER32	30	214-31107	7023	816-203002	ER32: Ø 3 ÷ 20 (18 Pinze)
7502	KIT ISO 40/ H 50 - ER25	40	214-31101	7022	816-203001	ER25: Ø 2 ÷ 16 (15 Pinze)
7503	KIT ISO 40/ H 50 - ER32	40	2929	7023	816-203002	ER32: Ø 3 ÷ 20 (18 Pinze)
7504	KIT ISO 40/ H 70 - ER32	40	214-31102	7023	816-203002	ER32: Ø 3 ÷ 20 (18 Pinze)
7505	KIT ISO 40/ H 50 - ER40	40	2930	7024	816-203003	ER40: Ø 4 ÷ 26 (23 Pinze)
7506	KIT ISO 50/ H 70 - ER32	50	214-31103	7023	816-203002	ER32: Ø 3 ÷ 20 (18 Pinze)
7507	KIT ISO 50/ H 75 - ER40	50	214-31104	7024	816-203003	ER40: Ø 4 ÷ 26 (23 Pinze)

DIN 6388 COLLET CHUCKS

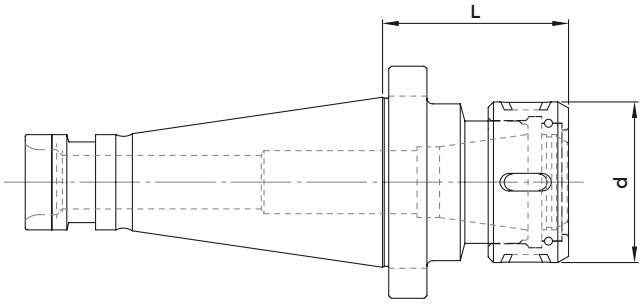

DIN 2080 - DIN 6388

COD.	DESCRIPTION	ISO	EOC	d	L	G6,3 8000	NUT	WRENCH	COLLET
3966	ISO 40 - EOC 25	40	EOC 25 2÷25	60	70	•	GOC25	816-203034	EOC25
3967	ISO 40 - EOC 32	40	EOC 32 3÷32	72	85	•	GOC32	816-203036	EOC32
3969	ISO 50 - EOC 32	50	EOC 32 3÷32	72	85	•	GOC32	816-203036	EOC32

ACCESSORIES

p. 706

p. 705

p. 654

MILLING CHUCKS

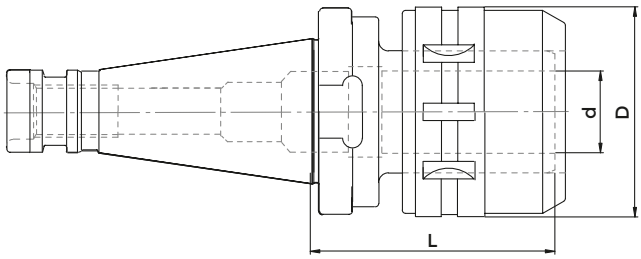

DIN 2080

COD.	DESCRIPTION	ISO	D	d	L	G6,3 8000	WRENCH	COLLET
214-01104	ISO 40 - PC 20	40	20	50	65	•	2900	K20D..
214-01101	ISO 40 - PC 32	40	32	72	80	•	816-203036	K32D..
214-01102	ISO 50 - PC 32	50	32	72	85	•	816-203036	K32D..

Supplied with wrench

MILLING CHUCK Ø	SPECIFICATION DIN 7178-1	TOLERANCE	RUN-OUT (3D)	CLAMPING TORQUE
C20	AT3	TC40 (0~+0,003)	0~0,01	980M.m (100 Kgf.m)
C32	AT3	TC50 (0~+0,004)	0~0,01	3430M.m (350 Kgf.m)

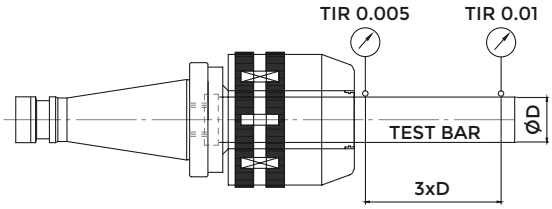

ACCESSORIES

p. 707

MILLING KIT WITH CHUCK, WRENCH AND COLLETS

COD.	DESCRIPTION	ISO	G6,3 8000	CHUCK	CASE	WRENCH	COLLET
7449	KIT ISO 40 - PC 20 / H 65	40	•	214-01104	3695	2900	K20D..: Ø 6 - 8 - 10 - 12 - 16
KITISO40C32	KIT ISO 40 - PC 32 / H 80	40	•	214-01101	3695	816-203036	K32D..: Ø 6 - 8 - 10 - 12 - 16 - 20 - 25
KITISO50C32	KIT ISO 50 - PC 32 / H 85	50	•	214-01102	3695	816-203036	K32D..: Ø 6 - 8 - 10 - 12 - 16 - 20 - 25

DRILL CHUCKS ADAPTERS

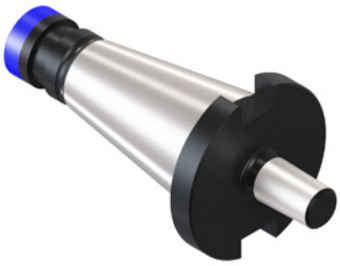

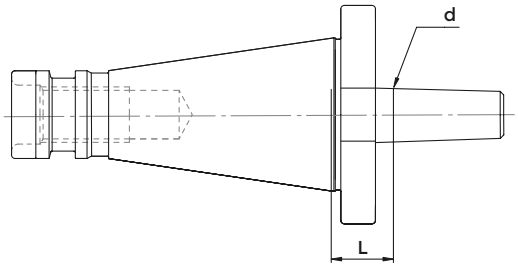

DIN 2080

COD.	DESCRIPTION	ISO	d	L	G6,3 8000
3991	ISO 30 - B 16	30	15,733	15	•
3859	ISO 40 - B 12	40	12,065	17	•
216-31102	ISO 40 - B 16	40	15,733	17	•
216-31103	ISO 40 - B 18	40	17,78	17	•
216-31104	ISO 50 - B 16	50	15,733	20	•
216-31105	ISO 50 - B 18	50	17,78	20	•

DRILL CHUCKS - RIGHT SPIN

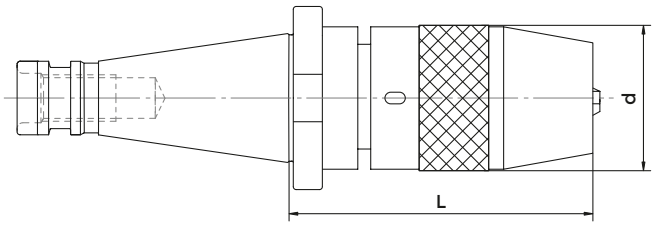

DIN 2080

COD.	DESCRIPTION	ISO	DRILL RANGE	L	d	G6,3 8000	CLAMPS	SCREW	WRENCH
8578	ISO 30 - DC 13	30	0,5 ÷ 13	90	50	•	832-012020	9021	816-111024
252-11101	ISO 40 - DC 13	40	0,5 ÷ 13	90	50	•	832-012020	9021	816-111024
252-11102	ISO 40 - DC 16	40	3 ÷ 16	105	57	•	832-012021	9023	816-111025
252-11103	ISO 50 - DC 13	50	0,5 ÷ 13	80	50	•	832-012020	9021	816-111024
252-11104	ISO 50 - DC 16	50	3 ÷ 16	100	57	•	832-012021	9023	816-111025

DRILL CHUCKS - LEFT AND RIGHT SPIN

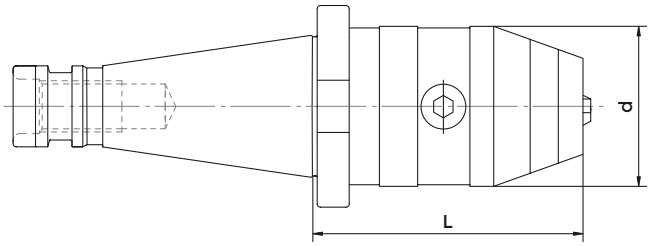

DIN 2080

COD.	DESCRIPTION	ISO	DRILL RANGE	L	d	G6,3 8000	WRENCH
252-11105	ISO 40 - DCU 13	40	0,5 ÷ 13	85	50	•	816-152001
252-11106	ISO 40 - DCU 16	40	3 ÷ 16	90	57	•	816-152001
8581	ISO 50 - DCU 13	50	0,5 ÷ 13	87	50	•	816-152001
8582	ISO 50 - DCU 16	50	3 ÷ 16	92	57	•	816-152001

TENSION/COMPRESSION TAPPING HEADS

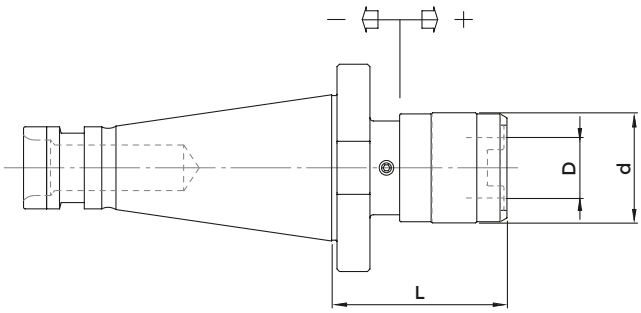

DIN 2080

COD.	DESCRIPTION	ISO	D	d	L	G6,3 8000	RANGE	TAP SIZE RANGE
3536	ISO 30 - B. 1	30	19	38	52	•	- 7,5 + 7,5	M 3 ÷ M 12 (M 18)
M1020	ISO 40 - B. 1	40	19	38	53	•	- 7,5 + 7,5	M 3 ÷ M 12 (M 18)
M1120	ISO 40 - B. 2	40	31	55	77	•	- 15 + 15	M 6 ÷ M 20 (M 30)
4199	ISO 50 - B. 1	50	19	38	57	•	- 9 + 9	M 3 ÷ M 12 (M 18)
M1130	ISO 50 - B. 2	50	31	55	79	•	- 15 + 15	M 6 ÷ M 20 (M 30)
3542	ISO 50 - B. 3	50	48	79	125	•	- 20 + 20	M 14 ÷ M 33 (M 48)

* Adapters with screws

SOLID TAPPING HEADS

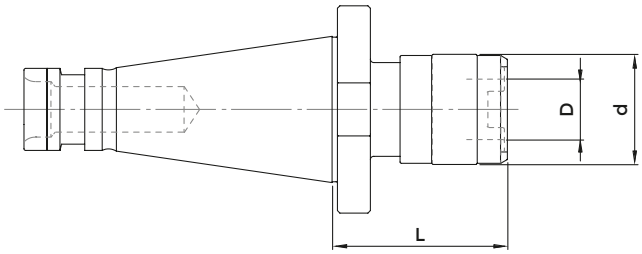

DIN 2080

COD.	DESCRIPTION	ISO	D	d	L	G6,3 8000	TAP SIZE RANGE
4941	ISO 30 - B. 1 FISSO	30	19	33	50	•	M 3 ÷ M 12 (* M 18)
4942	ISO 30 - B. 2 FISSO	30	31	50	73	•	M 6 ÷ M 20 (* M 30)
4943	ISO 40 - B. 1 FISSO	40	19	33	52	•	M 3 ÷ M 12 (* M 18)
4944	ISO 40 - B. 2 FISSO	40	31	50	74	•	M 6 ÷ M 20 (* M 30)

BLANK BARS

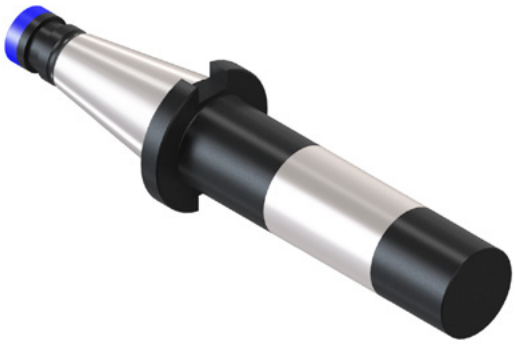

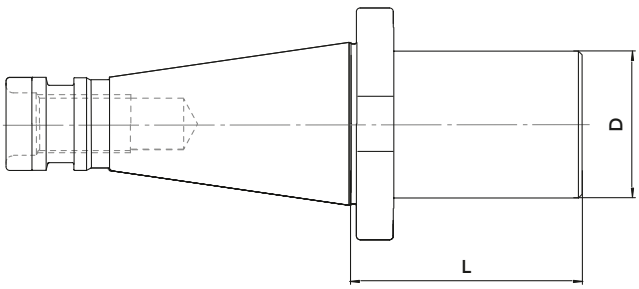

DIN 2080

COD.	DESCRIPTION	ISO	d	L	G6,3 8000
217-41101	ISO 40 - D. 40 ST / H 160	40	40	160	•
4378	ISO 40 - D. 63 ST / H 160	40	63	160	•
4379	ISO 40 - D. 63 ST / H 250	40	63	250	•
217-41106	ISO 50 - D. 80 ST / H 300	50	80	300	•

BORING
SYSTEM

BORING SYSTEM

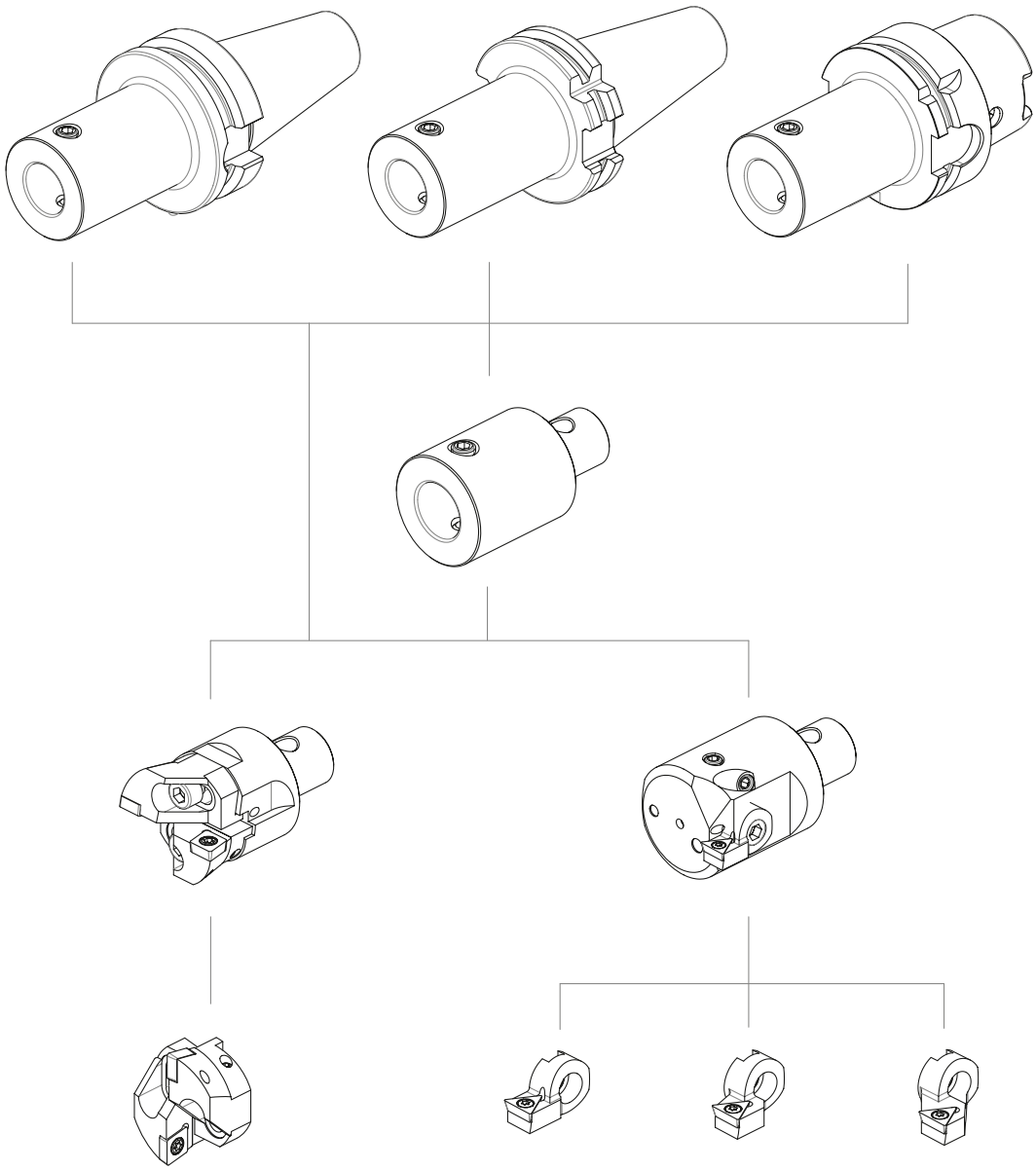

MD	D1	d	L	M
1	11	19	13	M4X0.5
2	14	24	17	M5X0.5
3	18	31	20	M6X0.75
4	22	40	25	M8X0.75
5	28	50	35	M10X1.0
6	36	63	40	M12X1.0

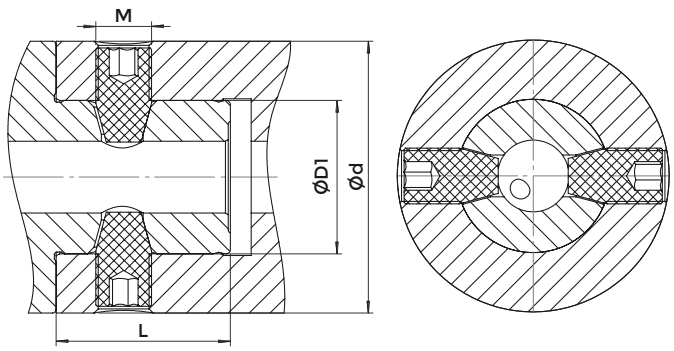

BASE HOLDER FOR BORING HEADS - MAS403/BT-AD

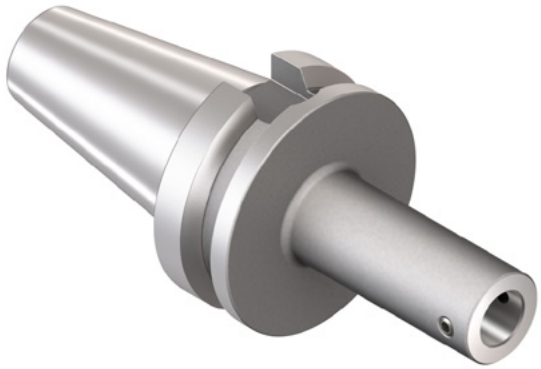

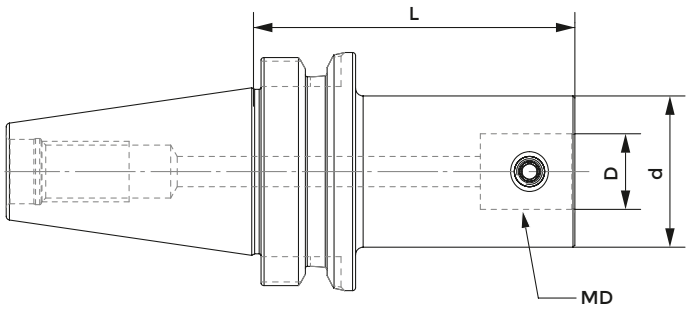

JIS-B 6339 MAS 403/BT

COD.	DESCRIPTION	ISO	MD	d	L	D	SCREW
290-01501	BT40H85MD2	40	2	24	85	14	811-402093
290-01502	BT40H115MD2	40	2	24	115	14	811-402093
290-01503	BT40H95MD3	40	3	31	95	18	811-402094
290-01504	BT40H125MD3	40	3	31	125	18	811-402094
290-01505	BT40H85MD4	40	4	40	85	22	811-402095
290-01506	BT40H130MD4	40	4	40	130	22	811-402095
290-01507	BT40H75MD5	40	5	50	75	28	811-402096
290-01508	BT40H125MD5	40	5	50	125	28	811-402096
290-01521	BT40H65MD6	40	6	64	65	36	811-402101
290-01522	BT40H115MD6	40	6	64	115	36	811-402101
290-01509	BT50H85MD2	50	2	24	85	14	811-402093
290-01510	BT50H110MD2	50	2	24	110	14	811-402093
290-01511	BT50H80MD3	50	3	31	80	18	811-402094
290-01512	BT50H125MD3	50	3	31	125	18	811-402094
290-01514	BT50H145MD4	50	4	40	145	22	811-402095
290-01515	BT50H105MD5	50	5	50	105	28	811-402096
290-01516	BT50H180MD5	50	5	50	180	28	811-402096
290-01523	BT50H95MD6	50	6	64	95	36	811-402101
290-01524	BT50H170MD6	50	6	64	170	36	811-402101

BASE HOLDER FOR BORING HEADS - DIN69871-AD (SK)

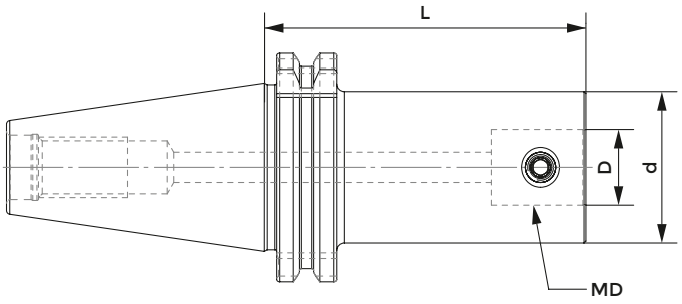

DIN 69871

COD.	DESCRIPTION	ISO	MD	d	L	D	SCREW
290-01201	TC40H85MD2	40	2	24	85	14	811-402093
290-01202	TC40H100MD2	40	2	24	100	14	811-402093
290-01203	TC40H95MD3	40	3	31	95	18	811-402094
290-01204	TC40H125MD3	40	3	31	125	18	811-402094
290-01205	TC40H85MD4	40	4	40	85	22	811-402095
290-01206	TC40H130MD4	40	4	40	130	22	811-402095
290-01207	TC40H75MD5	40	5	50	75	28	811-402096
290-01208	TC40H125MD5	40	5	50	125	28	811-402096
290-01217	TC40H65MD6	40	6	64	65	36	811-402101
290-01218	TC40H115MD6	40	6	64	115	36	811-402101
290-01209	TC50H85MD2	50	2	24	85	14	811-402093
290-01210	TC50H110MD2	50	2	24	110	14	811-402093
290-01211	TC50H80MD3	50	3	31	80	18	811-402094
290-01212	TC50H125MD3	50	3	31	125	18	811-402094
290-01213	TC50H115MD4	50	4	40	115	22	811-402095
290-01214	TC50H145MD4	50	4	40	145	22	811-402095
290-01215	TC50H105MD5	50	5	50	105	28	811-402096
290-01216	TC50H180MD5	50	5	50	180	28	811-402096
290-01219	TC50H95MD6	50	6	64	95	36	811-402101
290-01220	TC50H170MD6	50	6	64	170	36	811-402101

BASE HOLDER FOR BORING HEADS - DIN69893/A (HSK)

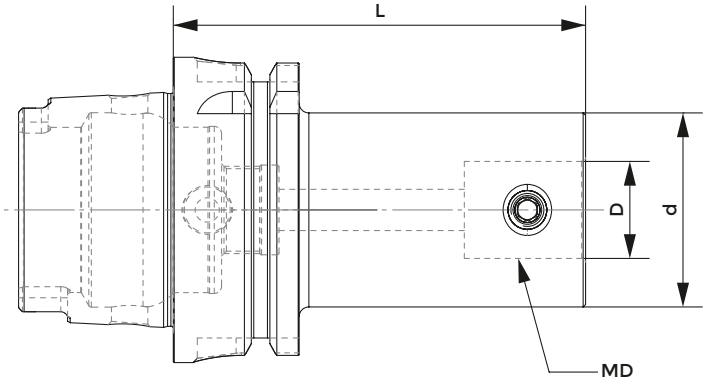

DIN 69893/A

COD.	DESCRIPTION	HSK	MD	d	L	D	SCREW
290-01701	HSK63AH85MD2	63	2	24	85	14	811-402093
290-01702	HSK63AH100MD2	63	2	24	100	14	811-402093
290-01703	HSK63AH95MD3	63	3	31	95	18	811-402094
290-01704	HSK63AH125MD3	63	3	31	125	18	811-402094
290-01705	HSK63AH85MD4	63	4	40	85	22	811-402095
290-01706	HSK63AH130MD4	63	4	40	130	22	811-402095
290-01707	HSK63AH75MD5	63	5	50	75	28	811-402096
290-01708	HSK63AH125MD5	63	5	50	125	28	811-402096

EXTENSIONS FOR BORING HEADS

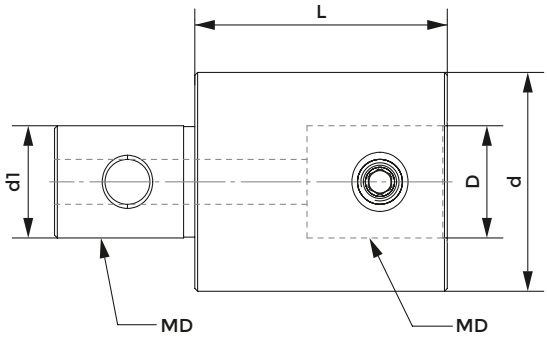

COD.	DESCRIPTION	MD	d	L	d1	D	SCREW
291-20001	MD2L30MD2	2	24	30	14	14	811-402093
291-20002	MD3L30MD3	3	31	30	18	18	811-402094
291-20003	MD4L45MD4	4	39	45	22	22	811-402095
291-20004	MD5L60MD5	5	50	60	28	28	811-402096
291-20005	MD6L60MD6	6	64	60	36	36	811-402101

REDUCERS FOR BORING HEADS

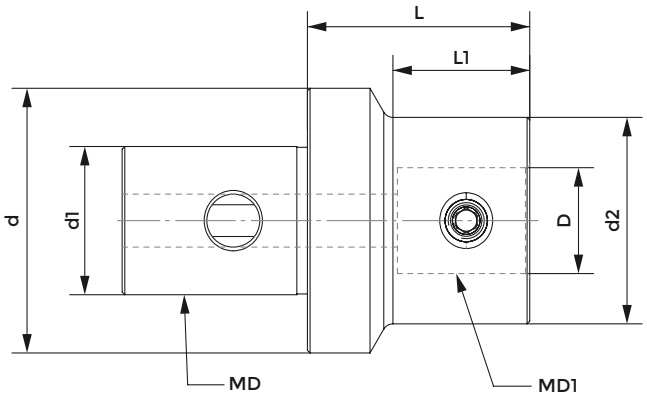

COD.	DESCRIPTION	MD	MD1	d	d2	L	L1	d1	D	SCREW
291-30003	MD3L37MD2	3	2	31	24	37	25	18	14	811-402093
291-30005	MD4L50MD2	4	2	40	24	50	36	22	14	811-402093
291-30006	MD4L50MD3	4	3	40	31	50	37	22	18	811-402094
291-30008	MD5L54MD2	5	2	50	24	54	35	28	14	811-402093
291-30009	MD5L47MD3	5	3	50	31	47	29	28	18	811-402094
291-30010	MD5L42MD4	5	4	50	40	42	25	28	22	811-402095
291-30011	MD6L63MD2	6	2	64	24	63	45	36	14	811-402101
291-30012	MD6L56MD3	6	3	64	31	56	39	36	18	811-402101
291-30013	MD6L51MD4	6	4	64	40	51	35	36	22	811-402101
291-30014	MD6L41MD5	6	5	64	50	41	25	36	28	811-402101

DOUBLE INSERT BORING HEADS - INCL. INSERT CARRIERS

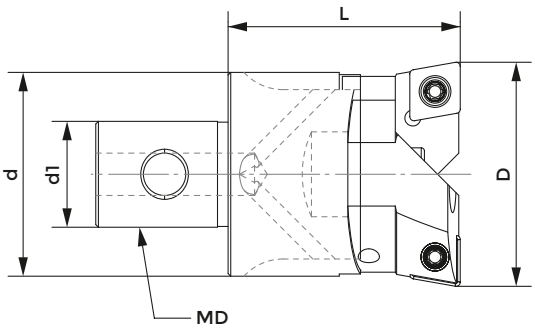

COD.	DESCRIPTION	MD	D	d	L	d1
523-90001	MD2-CL2533	2	25-33	23,5	35,5	14
523-90002	MD3-CL3242	3	32-42	30,5	40	18
523-90003	MD4-CL4154	4	41-54	38,5	47	22
523-90004	MD5-CL5370	5	53-70	49,5	57	28
523-90005	MD6-CL6890	6	68-90	63	71	36
523-90006	MD6-CL88110	6	88-110	63	71	36
523-90007	MD6-CL98126	6	98-126	63	71	36
523-90008	MD6-CL125153	6	125-153	63	71	36

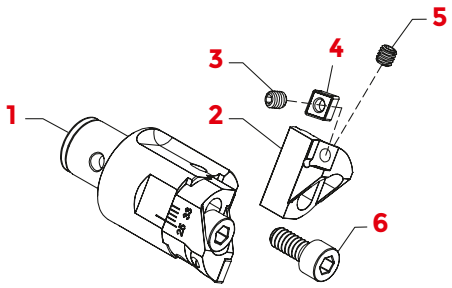

1	6	6	5	5	2	2	4	3	3	3
COD.	LOCKING SCREW	Q.TY	ADJ. SCREW	Q.TY	INSERT CARRIER COD.	Q.TY	INSERT	INSERT KEY	INSERT SCREW	INSERT SCREW COD.
523-90001	M5x20	2	M3x6	2	CRT-2533	2	CC..0602..	T8	m2,5x6	811-226018
523-90002	M6x20	2	M4x8	2	CRT-3242	2	CC..09T3..	T15	m4x10	811-256026
523-90003	M8x25	2	M5x8	2	CRT-4154	2	CC..09T3..	T15	m4x10	811-256026
523-90004	M10x35	2	M6x12	2	CRT-5370	2	CC..1204..	T20	m5x12	811-256027
523-90005	M10x35	4	M6x12	2	CRT-6890	2	CC..1204..	T20	m5x12	811-256027
523-90006	M10x35	4	M6x20	2	CRT-88110	2	CC..1204..	T20	m5x12	811-256027
523-90007	M12x40	4	M8x20	2	CRT-98126	2	CC..1204..	T20	m5x12	811-256027
523-90008	M12x40	4	M8x25	2	CRT-125153	2	CC..1204..	T20	m5x12	811-256027

Locking screw, adjustment screw and insert screw keys included.

FINISHING BORING HEADS - INCL. INSERT CARRIER

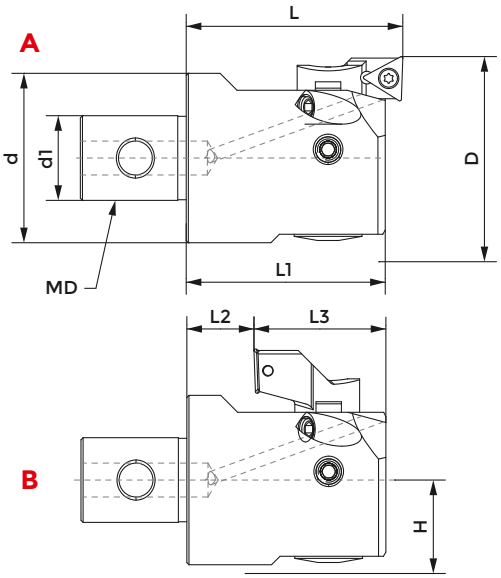

						A				B		
COD.	DESCRIPTION	MD	d1	INSERT CARRIER	D	d	L	L1	D	L2	L3	H
533-90001	MD2-FNT2547	2	14	*534-90001	25-33	24	35,5	33	-	11,5	21,5	12,5
		2	14	534-90002	32-40	24	35,5	33	36-40	11,5	21,5	12,5
		2	14	534-90003	39-47	24	35,5	33	39-47	11,5	21,5	12,5
533-90002	MD3-FNT3260	3	18	*534-90004	32-42	31	40	37	-	10	27	16
		3	18	534-90005	41-51	31	40	37	46-51	10	27	16
		3	18	534-90006	50-60	31	40	37	50-60	10	27	16
533-90003	MD4-FNT4174	4	22	*534-90007	41-54	40	47	43	-	12	31	20
		4	22	534-90008	50-63	40	47	43	53-63	12	31	20
		4	22	534-90009	61-74	40	47	43	61-74	12	31	20
533-90004	MD5-FNT5395	5	28	*534-90010	53-70	50	57	52	62-70	15	37	25,5
		5	28	534-90011	65-82	50	57	52	65-82	15	37	25,5
		5	28	534-90012	78-95	50	57	52	78-95	15	37	25,5
533-90005	MD6-FNT68150	6	36	*534-90013	68-100	64	71	67	80-100	23	44	32,5
		6	36	534-90014	94-126	64	71	67	94-126	23	44	32,5
		6	36	534-90015	118-150	64	71	67	118-150	23	44	32,5

* cartridge assemblied in boring head

INSERT CARRIERS FOR DOUBLE INSERT BORING HEADS

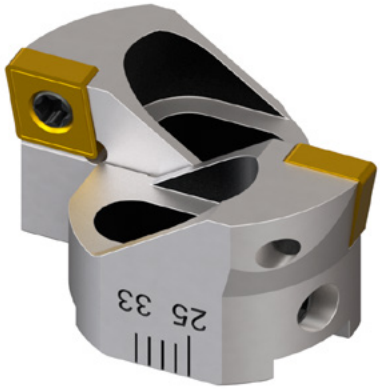

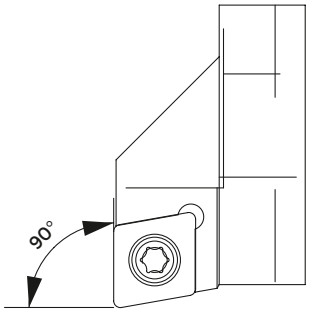

COD.	DESCRIPTION	MD	INSERT	SCREW
524-90001	CRT-2533	2	CC..0602..	811-226018
524-90002	CRT-3242	3	CC..09T3..	811-256026
524-90003	CRT-4154	4	CC..09T3..	811-256026
524-90004	CRT-5370	5	CC..1204..	811-256027
524-90005	CRT-6890	6	CC..1204..	811-256027
524-90006	CRT-88110	6	CC..1204..	811-256027
524-90007	CRT-98126	6	CC..1204..	811-256027
524-90008	CRT-125153	6	CC..1204..	811-256027

INSERT CARRIER FOR FINISHING BORING HEAD

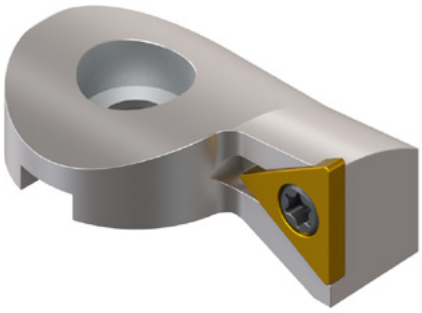

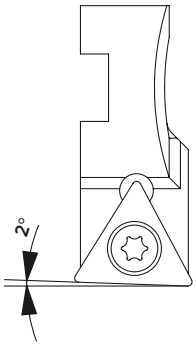

COD.	DESCRIPTION	MD	INSERT	SCREW
534-90001	CRF-2533/MD2	2	TC..06T102..	811-286007
534-90002	CRF-3240/MD2	2	TC..06T102..	811-286007
534-90003	CRF-3947/MD2	2	TC..06T102..	811-286007
534-90004	CRF-3242/MD3	3	TC..06T102..	811-286007
534-90005	CRF-4151/MD3	3	TC..06T102..	811-286007
534-90006	CRF-5060/MD3	3	TC..06T102..	811-286007
534-90016	CRF-2735/MD2	2	CC..0602..	811-226018
534-90017	CRF-3240/MD2	2	CC..0602..	811-226018
534-90018	CRF-3947/MD2	2	CC..0602..	811-226018
534-90019	CRF-3242/MD3	3	CC..0602..	811-226018
534-90020	CRF-4154/MD3	3	CC..0602..	811-226018
534-90021	CRF-5060/MD3	3	CC..0602..	811-226018
534-90007	CRF-4154/MD4	4	TC..1102..	811-226018
534-90008	CRF-5063/MD4	4	TC..1102..	811-226018
534-90009	CRF-6174/MD4	4	TC..1102..	811-226018
534-90010	CRF-5370/MD5	5	TC..1102..	811-226018
534-90011	CRF-6582/MD5	5	TC..1102..	811-226018
534-90012	CRF-7895/MD5	5	TC..1102..	811-226018
534-90013	CRF-68100/MD6	6	TC..1102..	811-226018
534-90014	CRF-94126/MD6	6	TC..1102..	811-226018
534-90015	CRF-118150/MD6	6	TC..1102..	811-226018

KIT

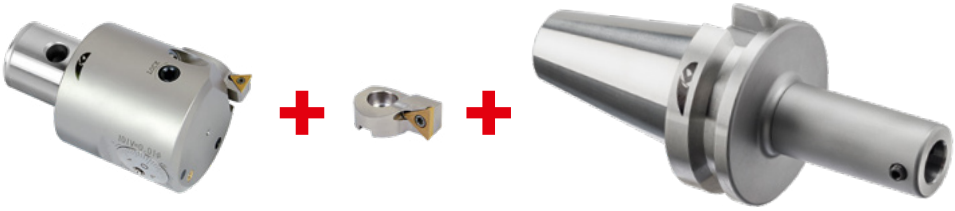

COD.	BASE HOLDER		BORING HEAD		INSERT CARRIER
KIT533SK40MD2	290-01201	TC40H85MD2	533-90001	FINISHING BORING HEAD MD2-FNT25-47	534-90001 25-33 TC..06T102..
KIT533BT40MD2	290-01501	BT40H85MD2	533-90001	FINISHING BORING HEAD MD2-FNT25-47	534-90001 25-33 TC..06T102..
KIT533SK40MD3	290-01203	TC40H95MD3	533-90002	FINISHING BORING HEAD MD3-FNT32-60	534-90004 32-42 TC..06T102..
KIT533BT40MD3	290-01503	BT40H95MD3	533-90002	FINISHING BORING HEAD MD3-FNT32-60	534-90004 32-42 TC..06T102..
KIT533SK40MD4	290-01205	TC40H85MD4	533-90003	FINISHING BORING HEAD MD4-FNT41-74	534-90007 41-54 TC..1102..
KIT533BT40MD4	290-01505	BT40H85MD4	533-90003	FINISHING BORING HEAD MD4-FNT41-74	534-90007 41-54 TC..1102..
KIT533SK40MD5	290-01207	TC40H75MD5	533-90004	FINISHING BORING HEAD MD5-FNT53-95	534-90010 53-70 TC..1102..
KIT533BT40MD5	290-01507	BT40H75MD5	533-90004	FINISHING BORING HEAD MD5-FNT53-95	534-90010 53-70 TC..1102..
KIT533SK40MD2L	290-01202	TC40H100MD2	533-90001	FINISHING BORING HEAD MD2-FNT25-47	534-90001 25-33 TC..06T102..
KIT533BT40MD2L	290-01502	BT40H100MD2	533-90001	FINISHING BORING HEAD MD2-FNT25-47	534-90001 25-33 TC..06T102..
KIT533BT40MD3L	290-01504	BT40H125MD3	533-90002	FINISHING BORING HEAD MD3-FNT32-60	534-90004 32-42 TC..06T102..
KIT533SK40MD4L	290-01206	TC40H130MD4	533-90003	FINISHING BORING HEAD MD4-FNT41-74	534-90007 41-54 TC..1102..
KIT533SK40MD5L	290-01208	TC40H125MD5	533-90004	FINISHING BORING HEAD MD5-FNT53-95	534-90010 53-70 TC..1102..
KIT533HSKMD4	290-01705	HSK63AH85MD4	533-90003	FINISHING BORING HEAD MD4-FNT41-74	534-90007 41-54 TC..1102..
KIT533HSKMD3L	290-01704	HSK63AH125MD3	533-90002	FINISHING BORING HEAD MD3-FNT32-60	534-90004 32-42 TC..06T102..
KIT533HSKMD4L	290-01706	HSK63AH130MD4	533-90003	FINISHING BORING HEAD MD4-FNT41-74	534-90007 41-54 TC..1102..

ADJUSTABLE BORING HEADS

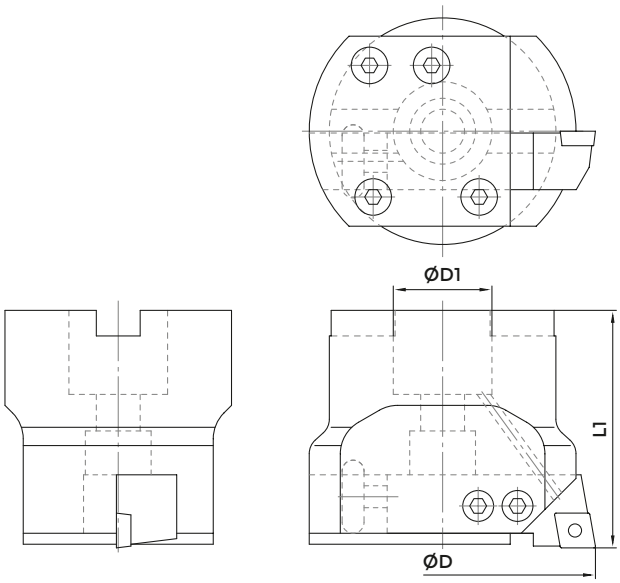

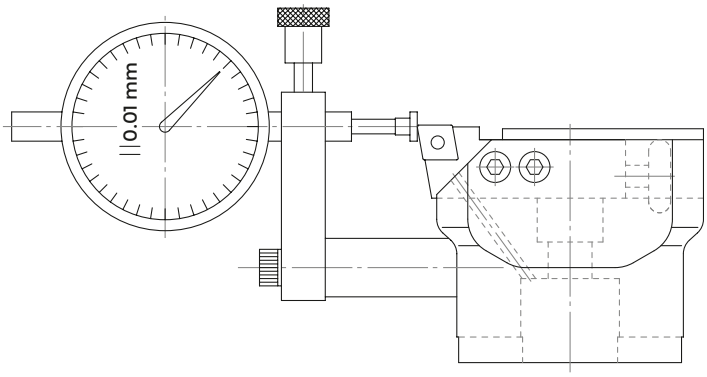

COD.	D	D1	l1	INSERT CARRIER		
RAIMAX 30	Ø28-40	16	45	K-SCGCL 08-06	K-STGPL 08-09	-
RAIMAX 40	Ø39-55	16	50	K-SCGCL 10-06	K-STGPL 10-09	-
RAIMAX 50	Ø49-75	22	56	K-SCGCL 12-09	K-STGPL 12-11	K-SSXCL 12-09
RAIMAX 75	Ø74-115	27	65	K-SCGCL 16-09	K-STGPL 16-11	K-SSXCL 16-09
RAIMAX 100	Ø98-160	40	67	K-SCGCL 20-09	K-STGPL 20-11	K-SSXCL 20-09
RAIMAX 150	Ø148-250	40	67	K-SCGCL 20L-09	K-STGPL 20L-11	K-SSXCL 20L-09

The insert carries is not supplied with the head RAMAX but must be ordered separately

INSERT CARRIERS

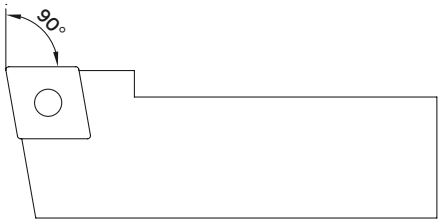

COD.	INSERT	SCREW	KEY
K-SCGCL 08-06	CCMT 0602	KV28	Torx 7
K-SCGCL 10-06	CCMT 0602	KV28	Torx 7
K-SCGCL 12-09	CCMT 09T3	KV4c	Torx 15
K-SCGCL 16-09	CCMT 09T3	KV4c	Torx 15
K-SCGCL 20-09	CCMT 09T3	KV4c	Torx 15
K-SCGCL 20L-09	CCMT 09T3	KV4c	Torx 15

COD.	INSERT	SCREW	KEY
K-STGPL 08-09	TPGX 0902	KV28	Torx 7
K-STGPL 10-09	TPGX 0902	KV28	Torx 7
K-STGPL 12-11	TPGX 1103	KV10	Torx 9
K-STGPL 16-11	TPGX 1103	KV10	Torx 9
K-STGPL 20-11	TPGX 1103	KV10	Torx 9
K-STGPL 20L-11	TPGX 1103	KV10	Torx 9

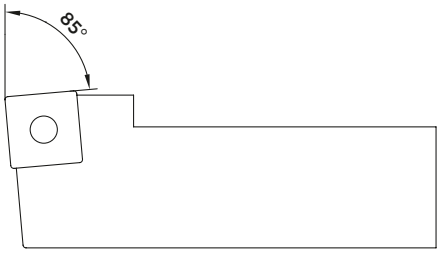

COD.	INSERT	SCREW	KEY
K-SSXCL 12-09	SCMT 09T3	KV4c	Torx 15
K-SSXCL 16-09	SCMT 09T3	KV4c	Torx 15
K-SSXCL 20-09	SCMT 09T3	KV4c	Torx 15
K-SSXCL 20L-09	SCMT 09T3	KV4c	Torx 15

RAIMAX - ADJUSTABLE BORING HEAD "PHI" 28-250
MISURAIMAX - MEASURING DEVICE

SUITABLE FOR STANDARD END MILL HOLDERS

RAIMAX adjustable head is suitable for boring and reaming machining. All heads are equipped with coolant nozzle.
Tool cutting diameter is adjusted by turning a screw. Adjustment screw acts on the insert carrier, that slides within a U-shaped groove obtained in tool body. For centesimal adjustment of cutting diameter, MISURAIMAX device, consisting of a tube and a centesimal or millesimal dial gauge, can be used.

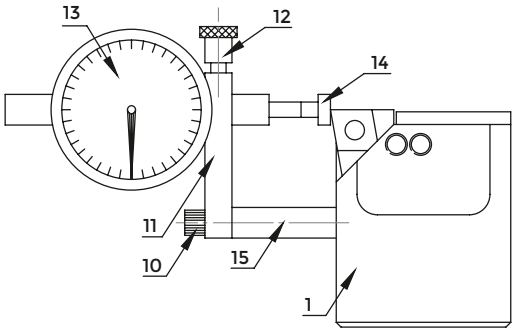

RAIMAX® Head

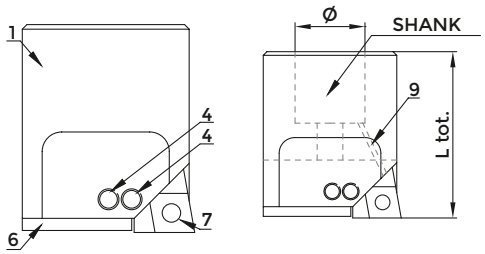

INSERT CARRIERS

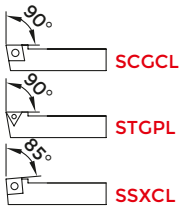

1. RAIMAX tool body
2. Insert carrier adjustment screw
3. Cone locking screw
4. Short cover screw
5. Cover screws
6. Cover
7. Insert carrier
8. Spring
9. Coolant nozzle
10. MISURAIMAX locking screw
11. Measuring device arm
12. Dial gauge locking screw
13. Dial gauge
14. Gauge probe
15. Tube

WITHOUT COVER

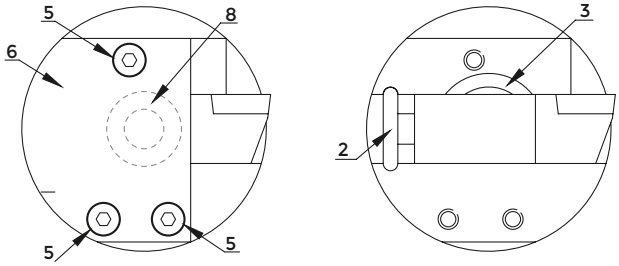

RAIMAX INSTRUCTIONS:

1. Unscrew the three screws (5) and remove the cover (6)
2. Loosen the two screws (4)
3. Remove the cartridge (7) from the slot
4. Fix the head on the holder and clamp it with the screw (3)
5. Put again the cartridge (7) in the slot.
6. Tighten the screws (5) to assembly the cover
7. Adjust the measure of cutting diameter rotating the screw. This will cause the shifting of the cartridge.
8. Tighten the two screws (4)
9. RAIMAX boring head is ready to be used

COD.	SCREW	COVER	SCREW FOR COVER	SCREW	SCREW
RAIMAX 30	KSR M8 R/L	KCC30	2 x KVCC30	KVR30	2 x KGG30
RAIMAX 40	KSR M8x20	KCC40	3 x KVCC40	KVR40	2 x KGG40
RAIMAX 50	KSR M10x20	KCC50	3 x KVCC50	KVR50	2 x KGG50
RAIMAX 75	KSR M12x25	KCC75	4 x KVCC75	KVR75	2 x KGG75
RAIMAX 100	KSR M20X	KCC100	4 x KVCC100	KVR100	2 x KGG100
RAIMAX 150	KSR M20X	KCC150	4 x KVCC150	KVR150	2 x KGG150

COD.
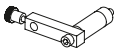
MISURAIMAX 30-40 + Dial indicator 1/100 0-5 mm
MISURAIMAX 30-40 + Dial indicator 1/100 0-5 mm
MISURAIMAX 50 + Dial indicator 1/100 0-10 mm
MISURAIMAX 75 + Dial indicator 1/100 0-10 mm
MISURAIMAX 100 + Dial indicator 1/100 0-10 mm
MISURAIMAX 150 + Dial indicator 1/100 0-10 mm

MISURAIMAX INSTRUCTIONS:

1. Check the two locking screws of the cartridge (4). These must be tightened.
2. Fix MISURAIMAX without dial gauge up to the head and tighten the screw (10).
3. Insert the dial gauge in the holding bar, push it up to the head till the contact point will touch the edge of insert of cartridge. Then tighten carefully the locking screw of the dial gauge (12).
4. Zerofill the dial gauge
5. Loosen the two locking screws of the gauge (4)
6. Modify the boring diameter of the head rotating the adjustment screws (2).
7. Check also the centesimal variation on the gauge display. After getting the measure, tighten the screws (4)
8. Remove MISUIRAMAX loosening the screws (10)
9. RAIMAX is now ready to be used

READY, ALWAYS.

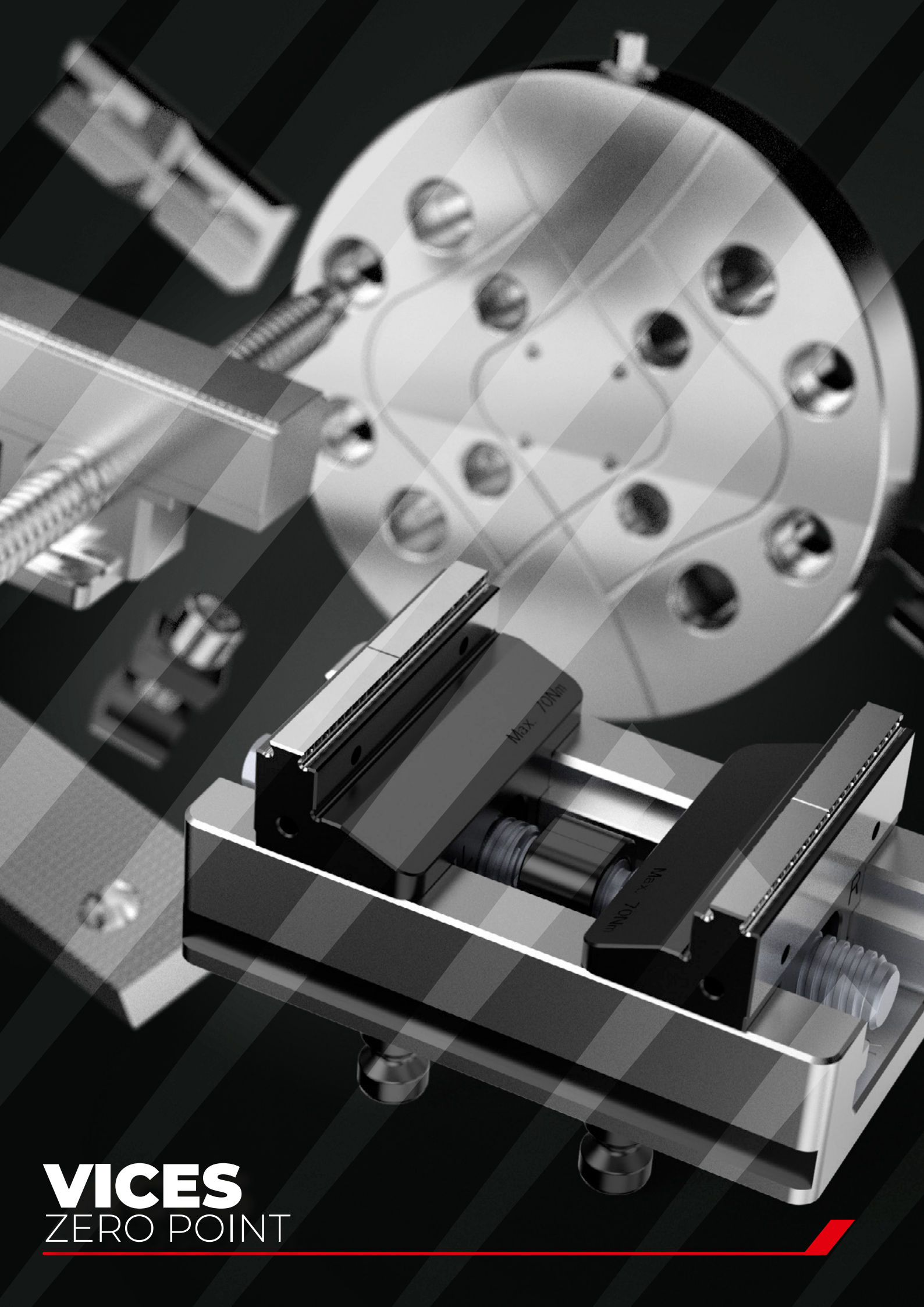

VICES
ZERO POINT

5-AXIS CENTRING VICE

The MRC KINTEK centring vices have a simple and robust design with a wide range of applications in manufacturing technology. Made with accessibility in mind, MRC KINTEK vices offer a great benefit to the user and provide an efficient solution in clamping parts. The jaws are reversible and have smooth and serrated zones on both sides.

The vices are compatible with zero point systems in the 52 and 96 grid, but can be also direct mounted with clamps thanks to the available side rails. Made to last, all vices have their body and jaws case hardened and the spindle has a wear resistant treatment. With available accessories soft jaws for custom contour parts can be used.

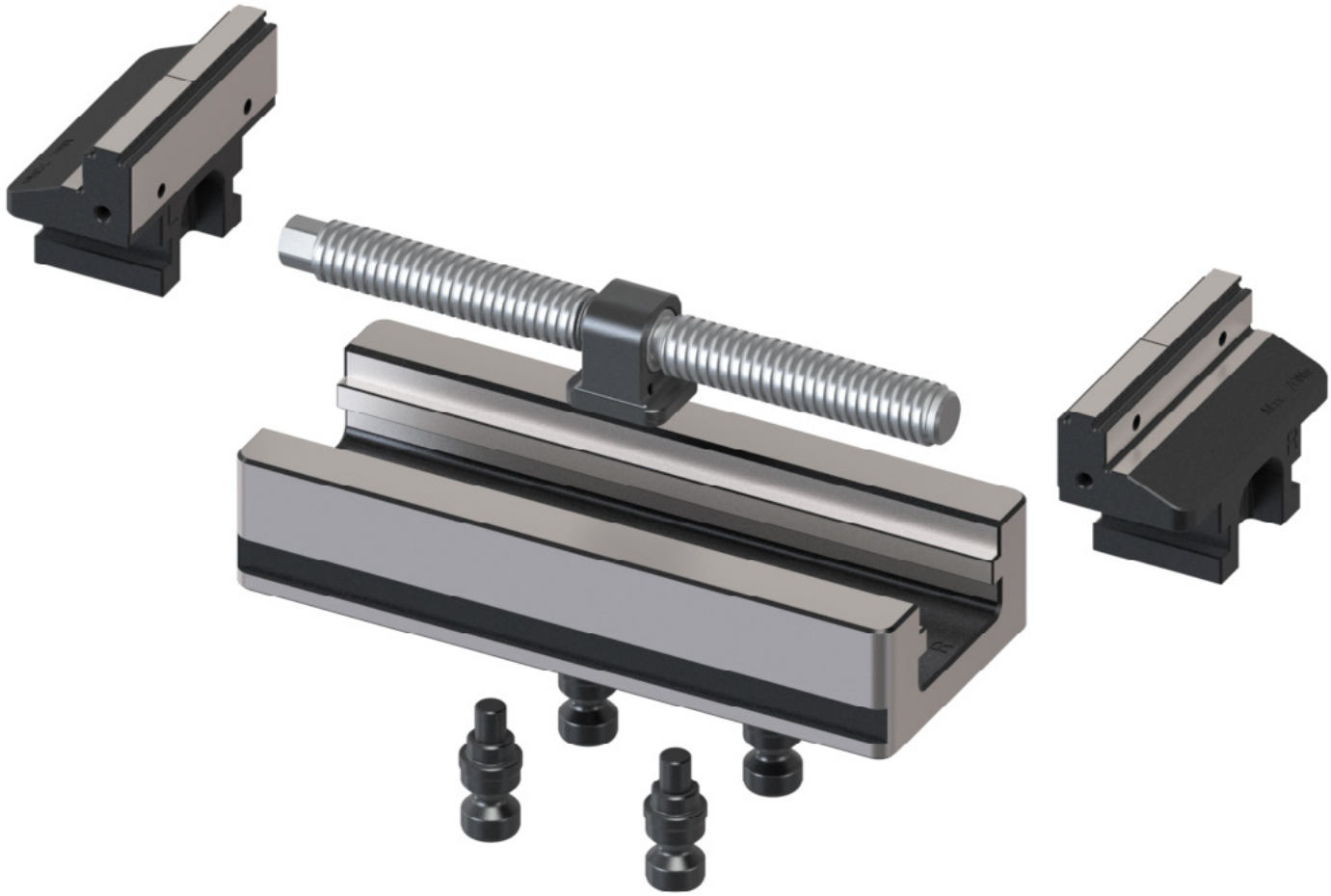

5-AXIS CENTRING VICE MRC 48X78

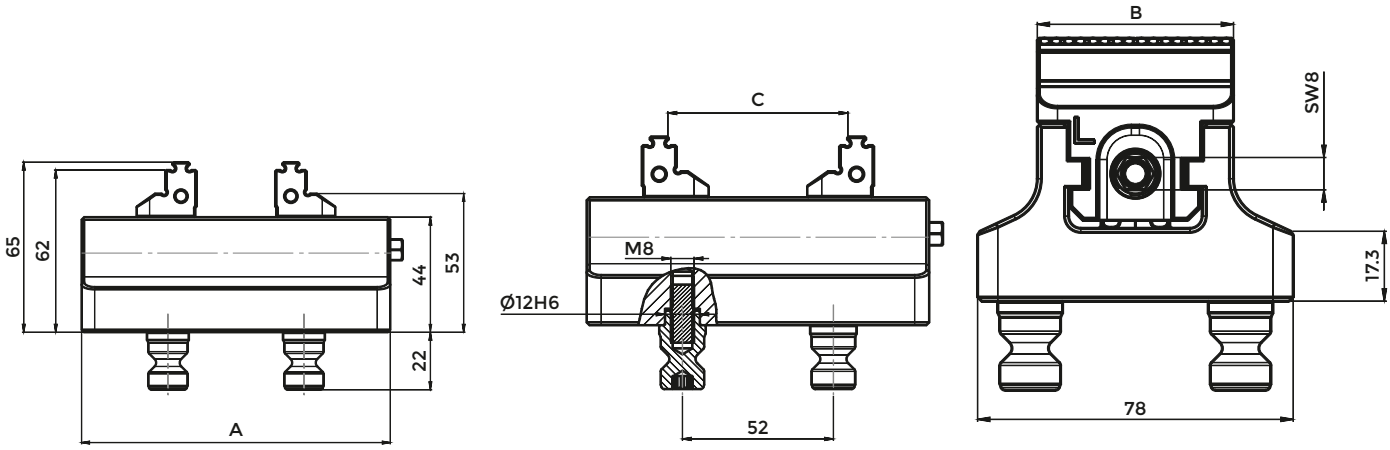

COD.	B	A	C max	TIGHTENING TORQUE	CLAMPING FORCE
MRC48X78	48,5 mm	78 mm	60 mm	70 Nm	14 kN
MRC48X118	48,5 mm	118 mm	100 mm	70 Nm	14 kN
MRC48X158	48,5 mm	158 mm	140 mm	70 Nm	14 kN

The vice suitable for zero point clamping systems with 52 mm interaxis.

It can be used for rough parts with 3 mm grip.
And smooth surfaces with ground jaw.

The jaws are reversible and allow to reach a wider clamping range.

Accessories and spare parts available.

5-AXIS CENTRING VICE MRC 78X110

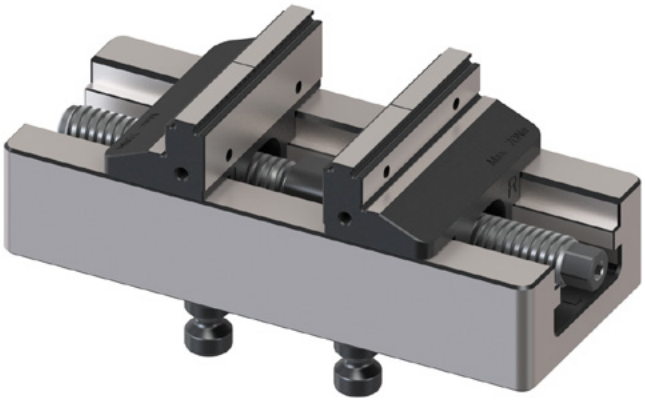

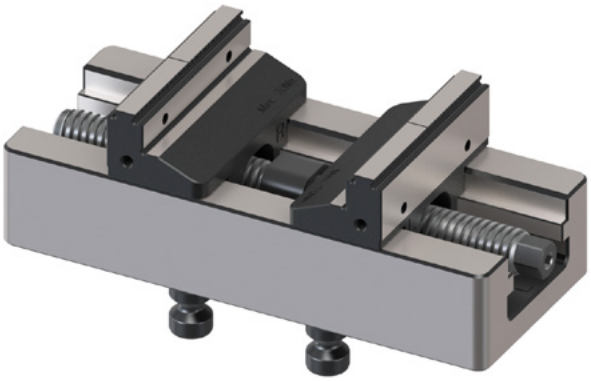

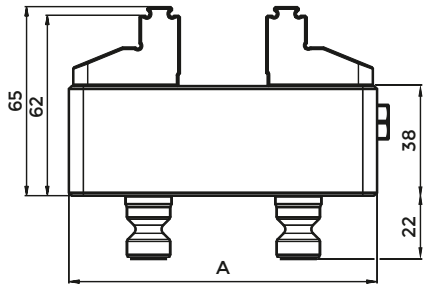

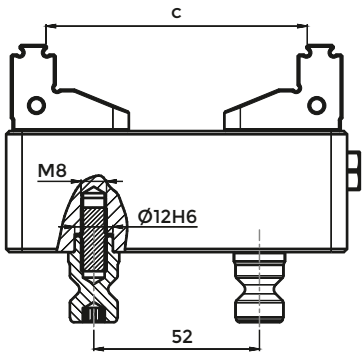

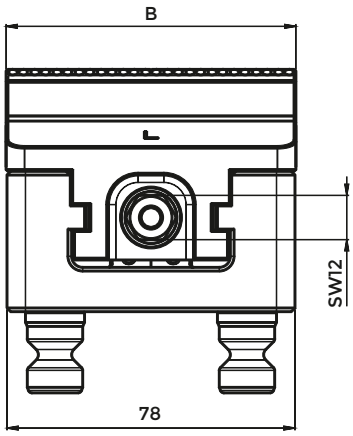

COD.	B	A	C max	TIGHTENING TORQUE	CLAMPING FORCE
MRC78X110	78,5	110	90	70 Nm	14 kN
MRC78X145	78,5	145	125	70 Nm	14 kN
MRC78X185	78,5	185	165	70 Nm	14 kN

The vice suitable for zero point clamping systems with 52 mm interaxis.

It can be used for rough parts with 3 mm grip.
And smooth surfaces with ground jaw.

The jaws are reversible and allow to reach a wider clamping range.

Accessories and spare parts available.

5-AXIS CENTRING VICE MRC 126X180

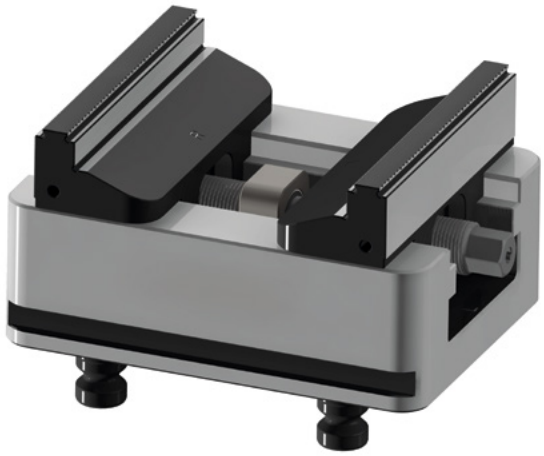

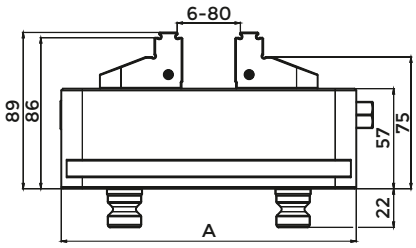

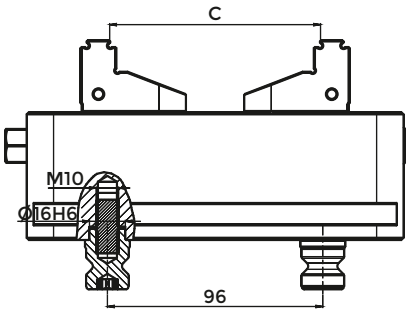

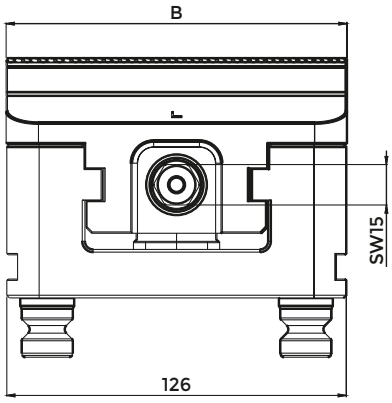

COD.	B	A	C max	TIGHTENING TORQUE	CLAMPING FORCE
MRC126X180	126,5	180	155	100 Nm	20 kN
MRC126X230	126,5	230	205	100 Nm	20 kN
MRC126X280	126,5	280	255	100 Nm	20 kN

The vice suitable for zero point clamping systems with 96 mm interaxis.

It can be used for rough parts with 3 mm grip.
And smooth surfaces with ground jaw.

The jaws are reversible and allow to reach a wider clamping range.

Accessories and spare parts available.

DUAL CLAMPING VICE MRCD 78

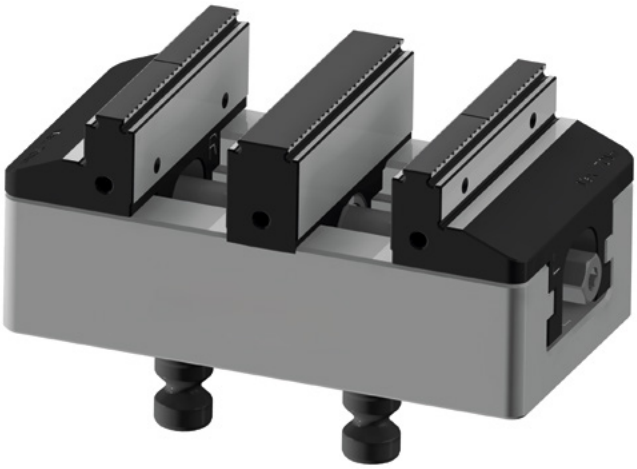

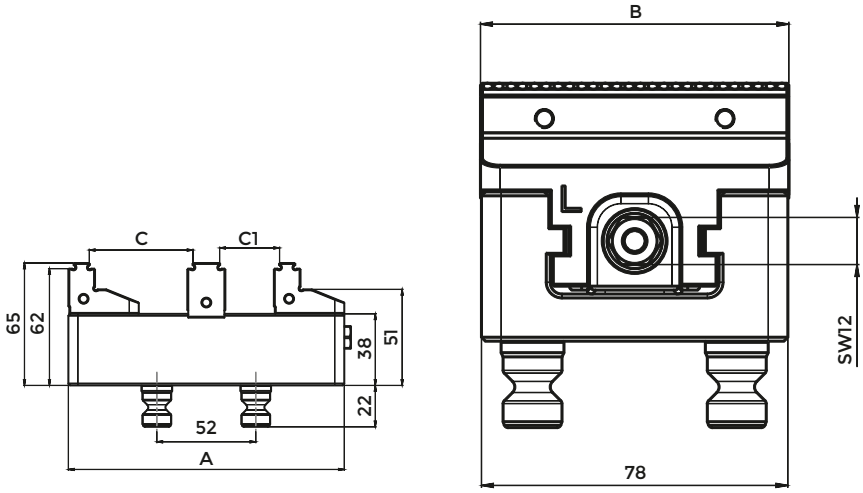

COD.	B	A	C max	C1 max	TIGHTENING TORQUE	CLAMPING FORCE
MRCD78X110	78,5	110	38	15	70 Nm	14 kN
MRCD78X145	78,5	145	55	32	70 Nm	14 kN
MRCD78X185	78,5	185	75	55	70 Nm	14 kN

This configuration uses the center jaw as the fixed position each side jaw moves independently, allowing the grip of different raw part sizes.

The jaws can easily be reversed for increased clamping range.

DUAL CLAMPING VICE MRCD 126

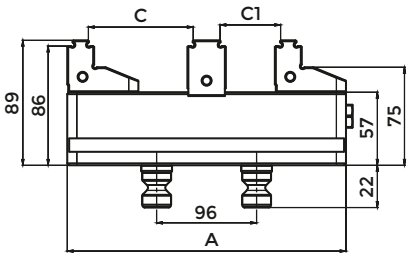

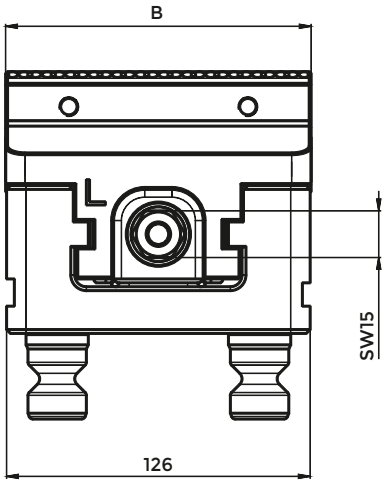

COD.	B	A	C max	C1 max	TIGHTENING TORQUE	CLAMPING FORCE
MRCD126X180	126,5	180	68	38	100 Nm	20 kN
MRCD126X230	126,5	230	95	60	100 Nm	20 kN
MRCD126X280	126,5	280	120	85	100 Nm	20 kN

This configuration uses the center jaw as the fixed position each side jaw moves independently, allowing the grip of different raw part sizes.

The jaws can easily be reversed for increased clamping range.

PRECISION CNC MACHINE CENTRING VICE MRCH 125X330

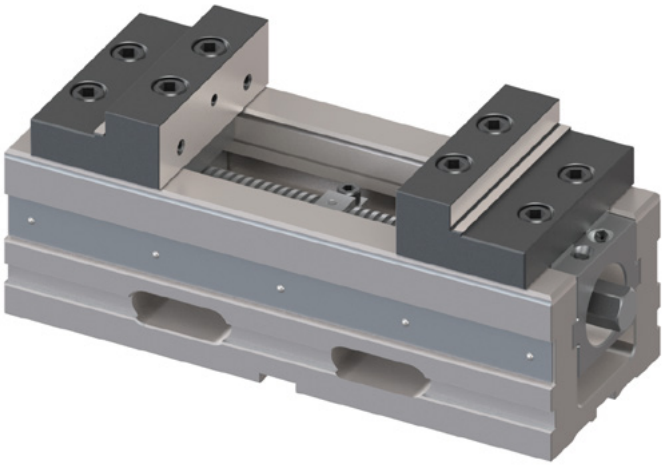

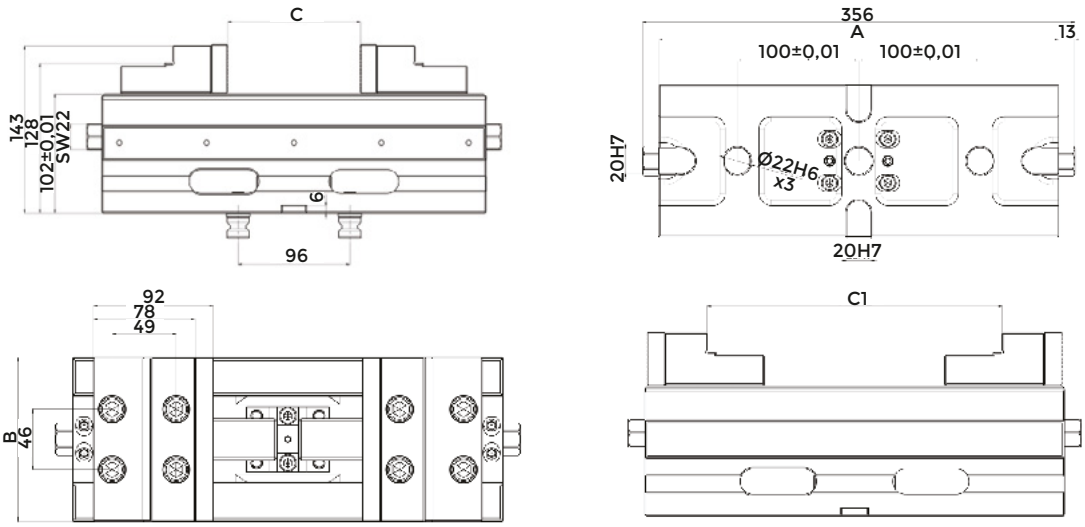

Can be used also with centring pins.

The jaws can be reversed for a larger clamping range.

COD.	B	A	C max	C1 max	TIGHTENING TORQUE	CLAMPING FORCE
MRCH125X330	125	330	115	232	200 Nm	35 kN

FEATURES:

- Induction hardened guideways
- Grinded body (GGG60 nodular cast iron)
- For conventional clamping, can be used on machine table or on towers
- Keyways for alignment and H6 locating holes
- Side rails for clamping
- Jaw width 125 mm
- Reversible jaws for larger clamping range
- Heat treated jaws
- Clamping force up to 35 kN@200Nm
- Rigid and robust design
- Side windows for quick cleaning of the inside of the vices
- Equipped with a mechanical spindle without force amplification
- Centering accuracy 0.015mm

PRECISION CNC MACHINE VICE MRF 125X428

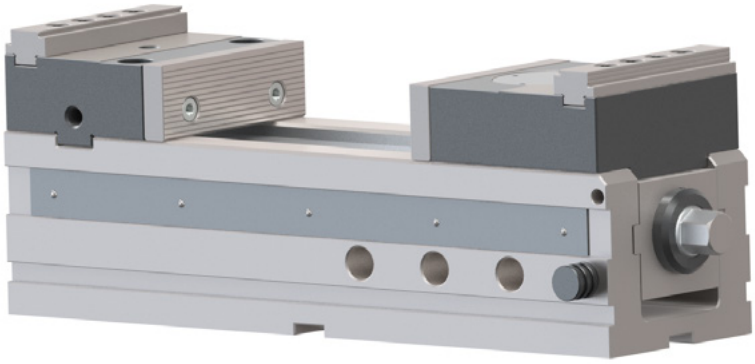

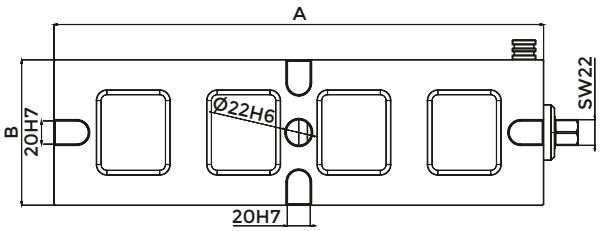

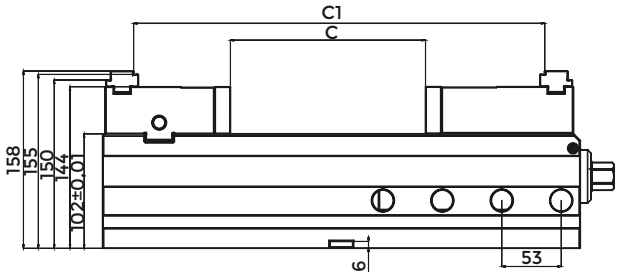

COD.	B	A	C max	C1 max	TIGHTENING TORQUE	CLAMPING FORCE
MRF125X428	125	428	115	232	200 Nm	40Kn

FEATURES:

- Induction hardened guideways
- Grinded body (GGG60 nodular cast iron)
- Side rails for conventional clamping
- Can be used on machine table or on towers
- Keyways for alignment and H6 locating holes
- Jaw width 125 mm
- Fixed jaw enhances simple programming thanks to constant zero
- Heat treated jaws
- Clamping force up to 40 kN
- Rigid and robust design
- Maximum clamping range of 355 mm
- Equipped with a mechanical spindle without force amplification
- Wide range of add-on jaws and rail available

ZERO POINT ZK1

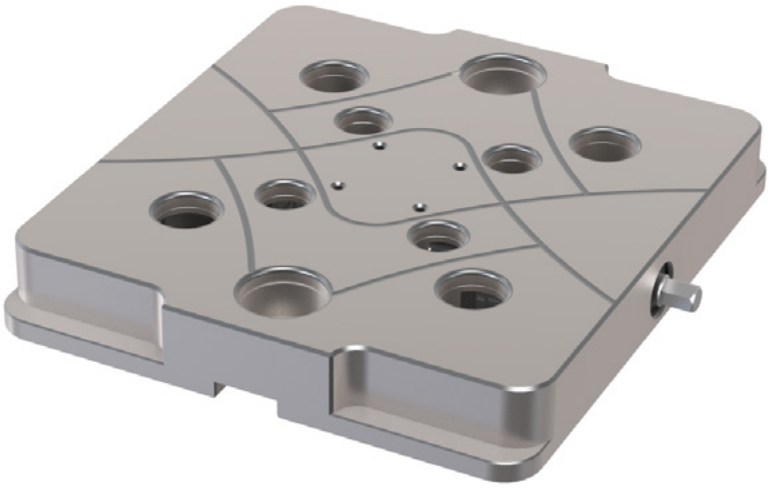

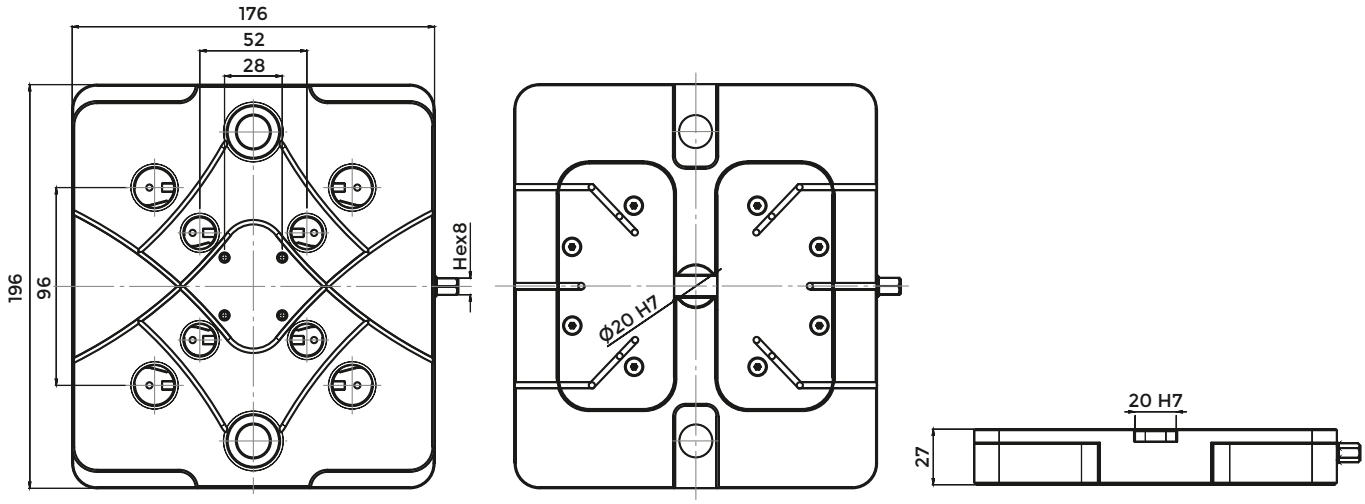

COD.	DIMENSIONS	ZERO POINT SYSTEM	ACCURACY	TIGHTENING TORQUE	HOLDING FORCE
ZK1-196x176	196X176X27	96/52 mm	0,01 MM	45 Nm	60 kN

FEATURES:

- Repetability less than 10µm
- Industry standard 52 and 96 centring pins spacing in one plate
- Surface treated steel body construction

AVAILABLE MOUNTING KITS

K-MKS

K-MKC

ZERO POINT ZK2

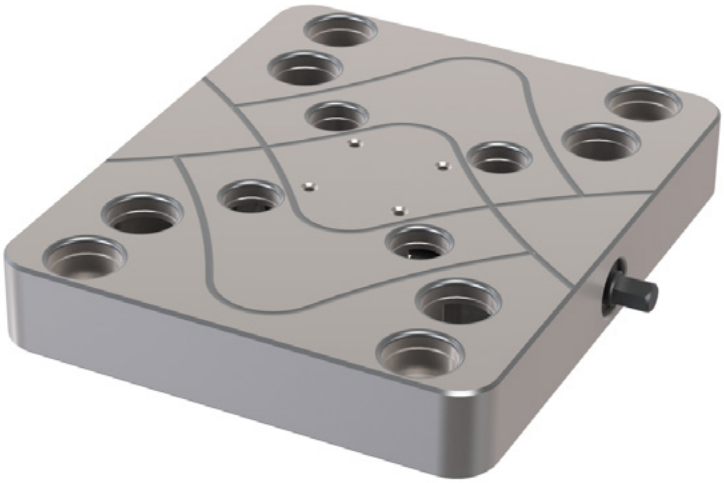

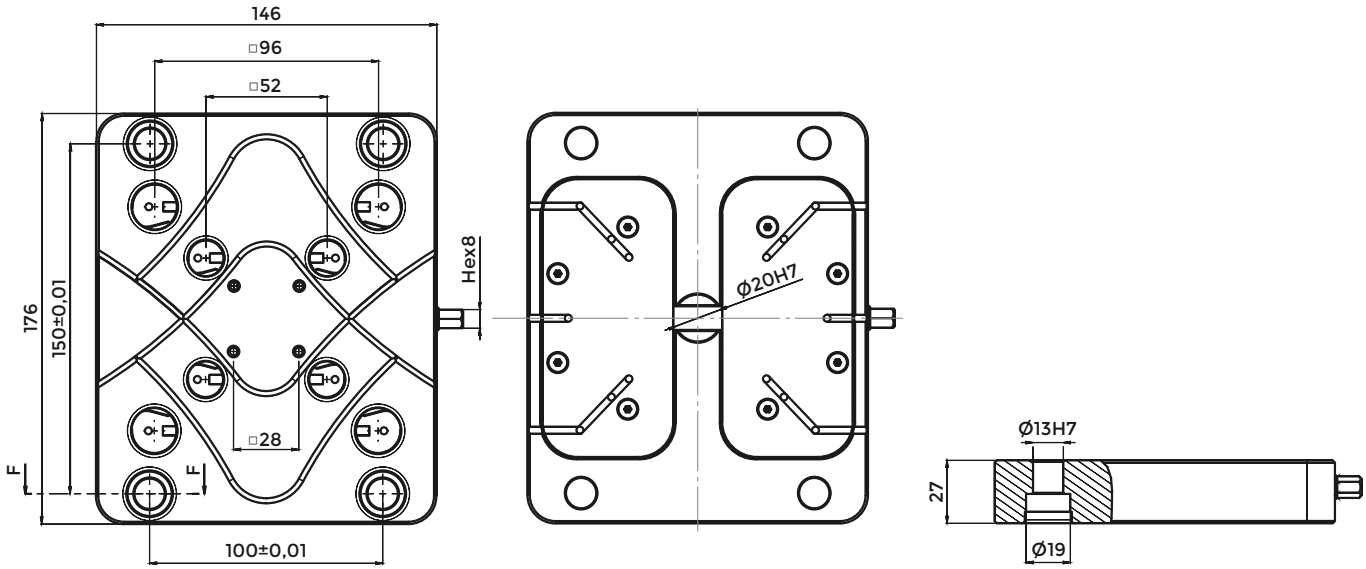

COD.	DIMENSIONS	ZERO POINT SYSTEM	ACCURACY	MAX. TIGHTENING TORQUE	HOLDING FORCE
ZK2-176x146	176X146X27	96/52 mm	0,01 MM	45 Nm	60 kN

FEATURES:

- Repetability less than 10µm
- Industry standard 52 and 96 centring pins spacing in one plate
- Surface treated steel body construction

AVAILABLE MOUNTING KITS

K-MKB

ZERO POINT ZK3

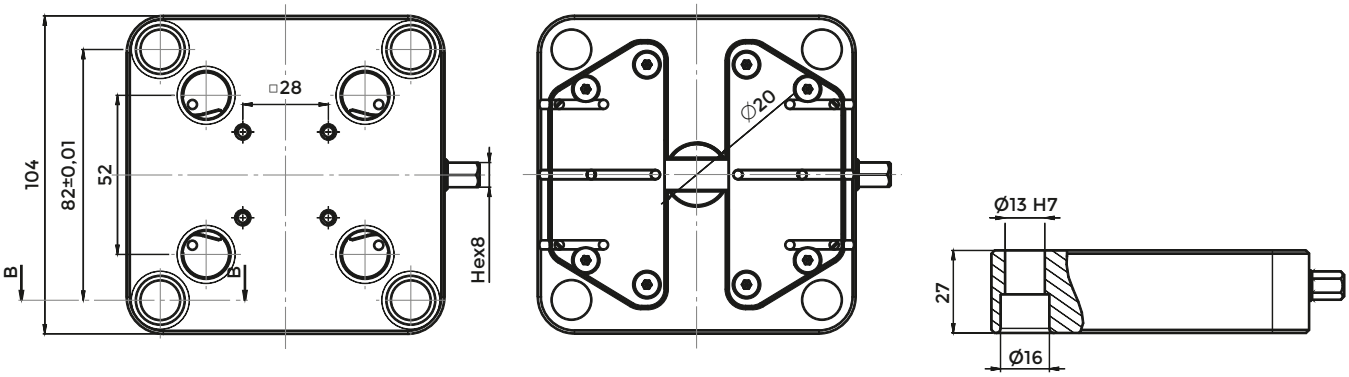

COD.	DIMENSIONS	ZERO POINT SYSTEM	ACCURACY	MAX. TIGHTENING TORQUE	HOLDING FORCE
ZK3-104x104	104X104X27	52 mm	0,01 MM	45 Nm	60 kN

FEATURES:

- Repetability less than 10µm
- Industry standard 52mm centring pins spacing in one plate
- Surface treated steel body construction

AVAILABLE MOUNTING KITS

K-MKB

ZERO POINT ZK4 X 195

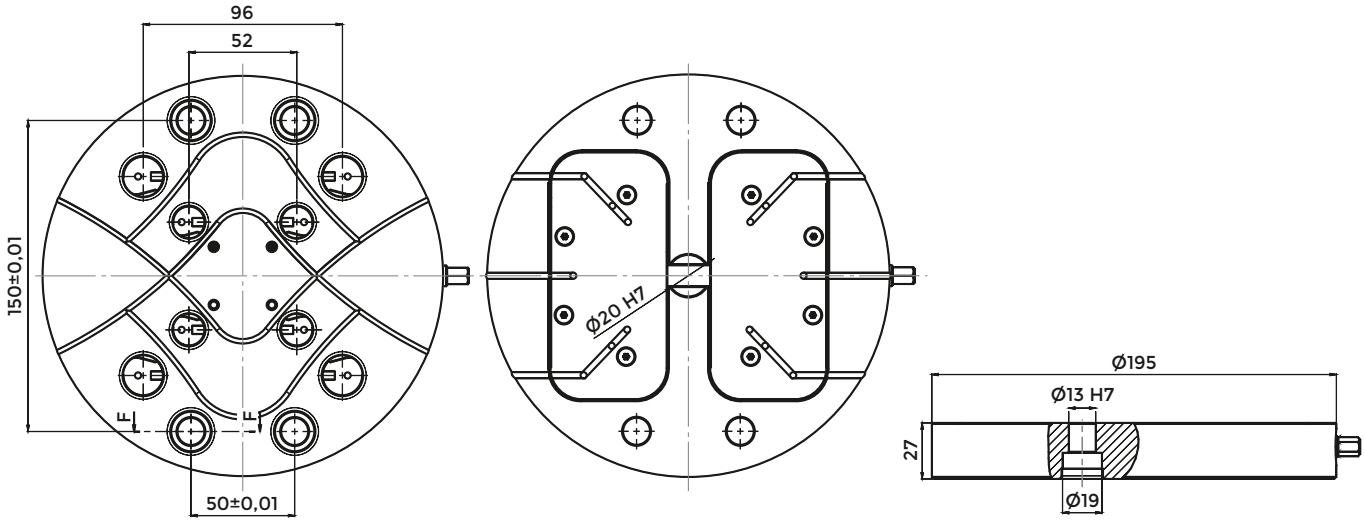

COD.	DIMENSIONS	ZERO POINT SYSTEM	ACCURACY	MAX. TIGHTENING TORQUE	HOLDING FORCE
ZKC4-195	DIAM.195X27	96/52 mm	0,01 MM	45 Nm	60 kN

FEATURES:

- Repetability less than 10µm
- Industry standard 52 and 96 centring pins spacing in one plate
- Surface treated steel body construction

AVAILABLE MOUNTING KITS

K-MKB

PAIR JAWS

JMB48

JMB78

JMB126

CENTRING PINS

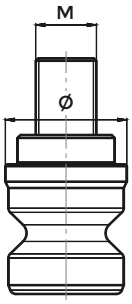

COD.	THREAD SIZE	DIAMETER	ZERO POINT SYSTEM
TSSC16	M8	Ø16	□52
TSSC20	M10	Ø20	96

SCREW

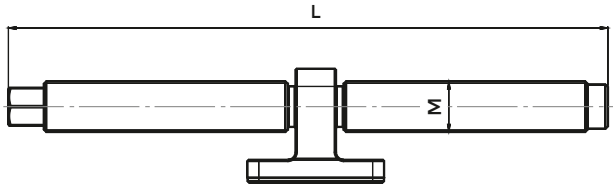

COD.	L	M
SK48X78	82,5	M12X1,5
SK48X118	122,5	M12X1,5
SK48X155	163	M12X1,5
SK78X110	111	M14X1,5
SK78X145	146	M14X1,5
SK78X185	186	M14X1,5
SK126X180	190	M20X1,5
SK126X230	237	M20X1,5
SK126X280	287	M20X1,5

ACCESSORIES

	CODE N.	DESCRIPTION
	JBAS78	Pair of basic soft jaws for 78mm vices
	JBAS126	Pair of basic soft clamp jaws for 126mm vices
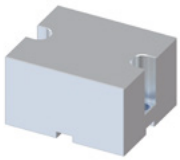	JALU78	Soft alloy clamp for 78mm base jaws
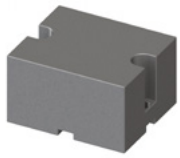	JSTEEL78	Soft 16MnCr5 clamp for 78mm base jaws
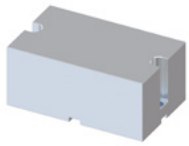	JALU126	Soft alloy clamp for 126mm base jaws
	JSTEEL126	Soft 16MnCr5 clamp for 126mm base jaws
	JRF 125.1	Plain jaw
	JRF 125.2	Stepped plain jaw
	JRF 125.3	Claw jaw
	JRF 125.4	Serrated jaw

ACCESSORIES

	CODE N.	DESCRIPTION
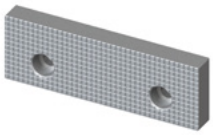	JRF 125.5	Double serrated jaw
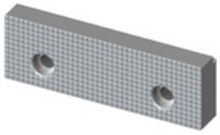	JRF 125.6	Reversible jaw
	JRF 125.7	Prismatic jaw
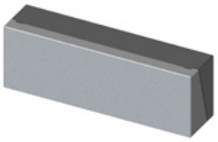	JRF 125.8	Pull down jaw
	JRF 125.9	Double serrated rail
	STMR1	Vice Stoper
	K-MKS	Mounting kit screw
	K-MKC	Mounting kit clamp
	K-MKB	Mounting kit bushing

HSK-T TOOLHOLDERS AND TURNING TOOLS

DIN ISO 12164-3

EXTERNAL (O.D.) TURNING TOOLS

DCM12 - DDM15

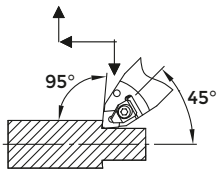

p. 262

PCMNR

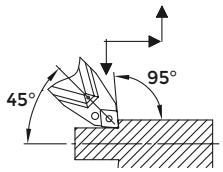

p. 263

SDJC

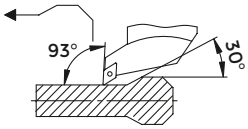

p. 264

SVJC

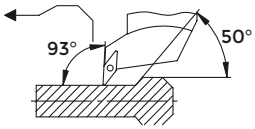

p. 266

DDMNL

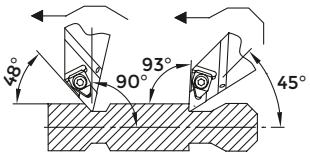

p. 262

PDNNR

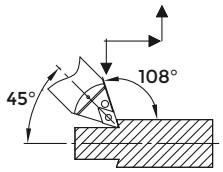

p. 263

SDNCN

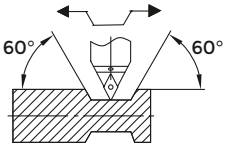

p. 265

SVJB

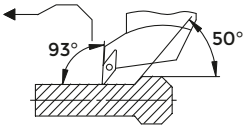

p. 266

PCLN

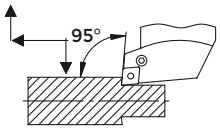

p. 262

PWLN

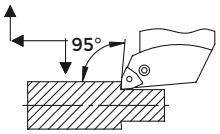

p. 264

SVVCN

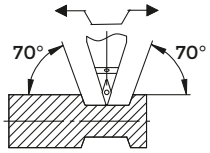

p. 265

THE

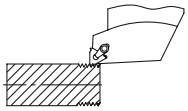

p. 266

PDJN

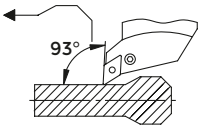

p. 263

SCLC

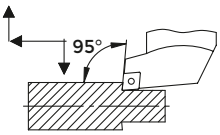

p. 264

SVHC

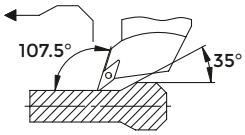

p. 265

INTERNAL (I.D.) TURNING TOOLS

PCLN

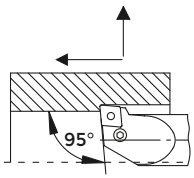

p. 267

PWLN

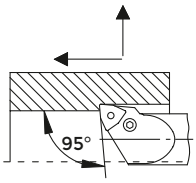

p. 267

SDUC

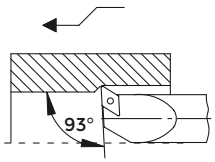

p. 268

THE

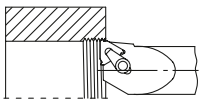

p. 269

PDUN

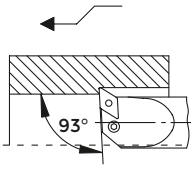

p. 267

SCLC

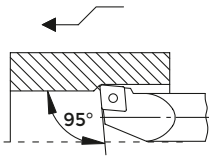

p. 268

SVQB

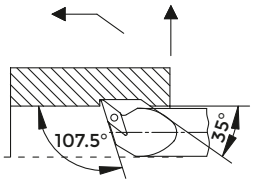

p. 268

IDENTIFICATION OF EXTERNAL (O.D.) TURNING TOOLS-HSK HOLDER

Coding example H 50 T S C L C L 12

H	Type of holder	HSK - DIN 69893				
50	Holder size	32 - Ø32 40 - Ø40	50 - Ø50 63 - Ø63	80 - Ø80 100 - Ø100	125 - Ø125 160 - Ø160	
T	Form	A + C				
S	Clamping system	C	D	M	P	S
C	Insert Shape	C (80°)	D (55°)	R	S	T	V (35°)	W (80°)
L	Shape of turning tools	A 90	B 75	C 90	D 45	E 60	F 90	G 90	H 107.5
		J 93	K 75	L 95	M 50	N 63	P 117.5	Q 15	R 75
		S 45	T 60	U 93	V 72.5	W 60	Y 85		
C	Clearance angle	B	C	N	P				
L	Feeding direction	L	R	N					
12	Insert cutting edge lenght	C - D - E - M - V	S	R	T	W			

TURNING MODULAR SYSTEM

- Adopting the famous HSK-DIN69893, in the several versions, and maintaining an interchangeability with the attacks for working centers, KINTEK offers the possibility to reduce, drastically, the times of set-up.
- Maximum rapidity in the tool change
- Great rigidity thanks to the big support surface
- The same cutting position
- Reduction of the vibrations
- Precision of interchangeability
- Optimal repeatability of positioning to the change tool: maximum error +/- 0,002 mm
- The conical bar hold is introduced in the appropriate center and, turning screw, a special clamp opens Locking the tool-holder taking advantage of the connection cone-plan
- Baluff chip hole

IDENTIFICATION OF INTERNAL (I.D.) TURNING TOOLS-HSK HOLDER

Coding example H 50 T 20 S T F C L 11

H	Type of holder	HSK - DIN 69893					
50	Holder size		32 - Ø32 40 - Ø40	50 - Ø50 63 - Ø63	80 - Ø80 100 - Ø100	125 - Ø125 160 - Ø160	
T	Form	A + C					
20	Turning tools diameter		8 - Ø8 10 - Ø10	12 - Ø12 16 - Ø16	20 - Ø20 25 - Ø25	32 - Ø32 40 - Ø40	50 - Ø50
S	Clamping system	C	D	M	P	S	
T	Insert Shape	C	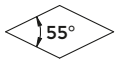 D	S	T	V	W
F	Shape of turning tools	90 F	75 K	95 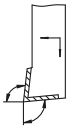 L	117.5 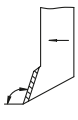 P	15 Q	93 U	Z
C	Clearance angle	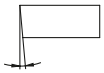 B	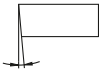 C	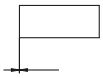 N	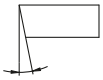 P		
L	Feeding direction	L	R	N			
11	Insert cutting edge lenght	C - D - V	S	T	W		

HSK DIN69893 TOOLS AND TOOLHOLDERS

HSK - T

All HSK tools and toolholders are manufactured according to DIN norm.

CONE'S TOLERANCE: According to DIN 69893

DRIVE KEY'S TOLERANCE:

The so-called ICTM tolerance was born to reduce the positive allowance between the spindle drive key and the holder key slot. The ICTM tolerance applied on these products to the drive key gives them a great capacity of precision.

The advantages of standard ICTM are multiple: excellent repeatability of change tool positioning, maximum error +/-0,005 giving the cutting edge always the same position, it permits a perfect tool interchangeability, it eliminates vibrations.

- Manufactured with casehardening Steel
- Casehardened with depth 0,4-0,5 mm
- Hardened-Tempered-Black oxided
- Hardness HRC 58+-2 , strenght 800-1000 N/mm2
- Internal and external grinding finish
- Working of the front side (tool seat)
- Taking up drive keys to ICTM tolerance
- Tested 100% with certified measuring instruments

HSK-T EXTERNAL TURNING TOOLS

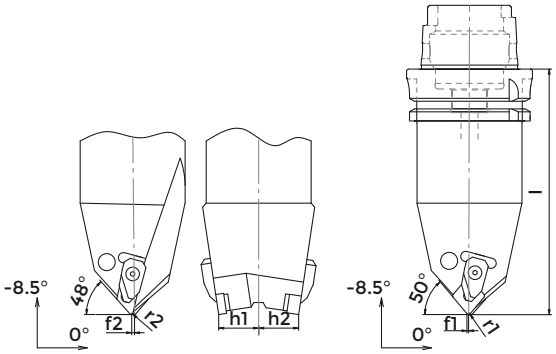

DCM12DDM15

ICTM standard (HSK-T)

COD.	HSK	l	f1	r1	h1	f2	r2	h2	INSERT N.1	INSERT N.2	SUPPORT PAD - 1	SUPPORT PAD - 2	SHIM PIN	CLAMP	SPRING	SCREW
H63TDCM12DDM151	63	100	0.9	0.8	20	0.9	0.8	20	CN..1204..	DN..1506..	SPCN12	SPDN15	SP02	STF12L-M	M2	VT22
H63TDCM12DDM15	63	145	0.9	0.8	20	0.9	0.8	20	CN..1204..	DN..1506..	SPCN12	SPDN15	SP02	STF12L-M	M2	VT22

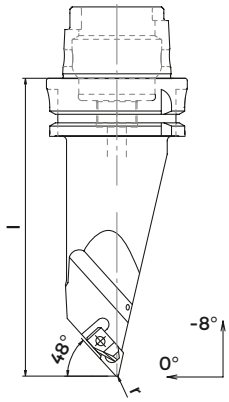

DDMNL

ICTM standard (HSK-T)

COD.	HSK	l	r	INSERT	SUPPORT PAD	SHIM PIN	CLAMP	SPRING	SCREW
H63TDDMNL15-100	63	100	0.8	DN.1506..	SPDN15	SP02	STF12L	M2	VT22
H63TDDMNL15-145	63	145	0.8	DN.1506..	SPDN15	SP02	STF12L	M2	VT22

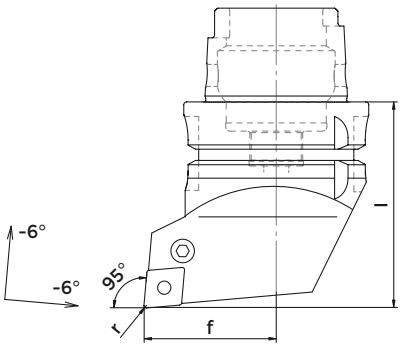

PCLN

ICTM standard (HSK-T)

COD.	HSK	l	f	r	INSERT	SUPPORT PAD	SHIM PIN	CLAMP	SCREW
H63TPCLNL/R12	63	70	45	0.8	CNM.1204..	SPCN12	SP02	LV02	VT02
H63TPCLNL16	63	70	45	1,2	CNM.160612	SPCN16	SP03	LV03	VT03
H100TPCLNL/R12	100	90	65	0.8	CNM.1204..	SPCN12	SP02	LV02	VT02
H100TPCLNL/R16	100	90	65	1,2	CNM.160612	SPCN16	SP03	LV03	VT03

HSK-T EXTERNAL TURNING TOOLS

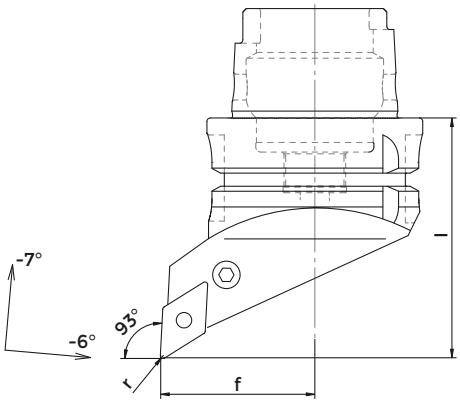

PDJN

ICTM standard (HSK-T)

COD.	HSK	l	f	r	INSERT	SUPPORT PAD	SHIM PIN	CLAMP	SCREW
H63TPDJNL/R15	63	70	45	0.8	DNM.1506..	SPDN15	SP02	LV05	VT05
H100TPDJNL/R15	100	90,15	66,15	0,8	DNM.1506..	SPDN15	SP02	LV05	VT05

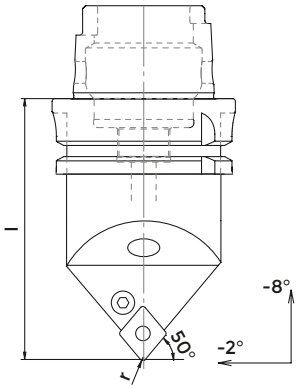

PCMNR

ICTM standard (HSK-T)

COD.	HSK	l	r	INSERT	SUPPORT PAD	SHIM PIN	CLAMP	SCREW
H63TPCMNR12-90	63	90	0.8	CN.1204..	SPCN12	SP02	LV02	VT02
H63TPCMNR12-100	63	100	0.8	CN.1204..	SPCN12	SP02	LV02	VT02
H63TPCMNL/R12-145	63	145	0.8	CN.1204..	SPCN12	SP02	LV02	VT02

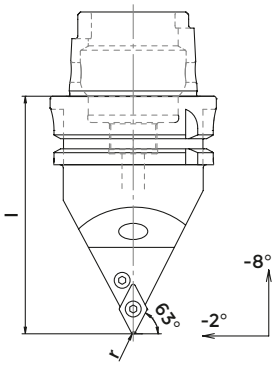

PDNNR

ICTM standard (HSK-T)

COD.	HSK	l	r	INSERT	SUPPORT PAD	SHIM PIN	CLAMP	SCREW
H63TPDNNR15-90	63	90	0.8	DN.1506..	SPDN15	SP02	LV05	VT05
H63TPDNNR15-100	63	100	0.8	DN.1506..	SPDN15	SP02	LV05	VT05
H63TPDNNR15-145	63	145	0.8	DN.1506..	SPDN15	SP02	LV05	VT05

HSK-T EXTERNAL TURNING TOOLS

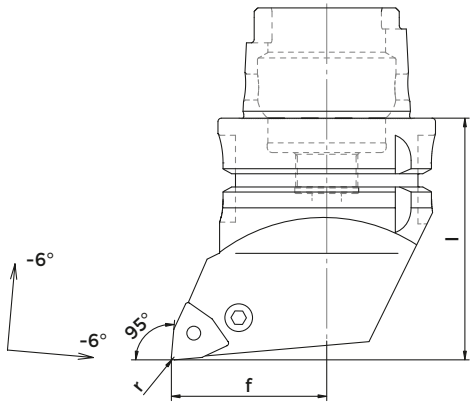

PWLN

ICTM standard (HSK-T)

COD.	HSK	l	f	r	INSERT	SUPPORT PAD	SHIM PIN	CLAMP	SCREW
H63TPWLNL/R08	63	70	45	0.8	WN..0804..	SPWN08	SP02	LV02	VT02

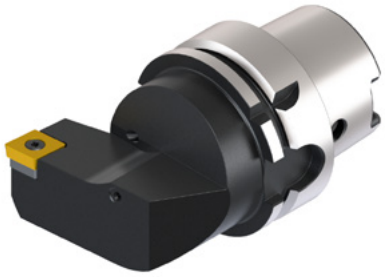

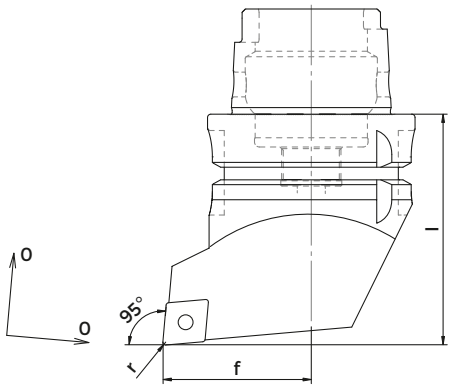

SCLC

ICTM standard (HSK-T)

COD.	HSK	l	f	r	INSERT	SUPPORT PAD	BUSH	SCREW
H63TSCLCL/R12	63	70	45	0.8	CC..1204..	SPCC12	VTA01	TR4

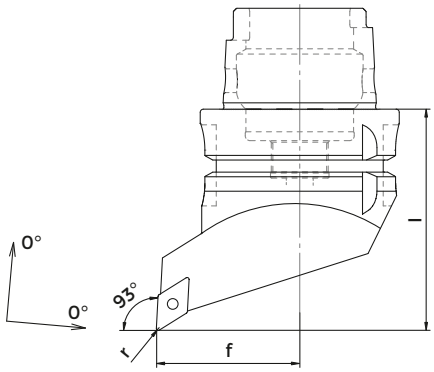

SDJC

ICTM standard (HSK-T)

COD.	HSK	l	f	r	INSERT	SUPPORT PAD	BUSH	SCREW
H63TSDJCL/R11	63	70	45	0.8	DC..11T3..	SPDC11	VTA02	TR8

HSK-T EXTERNAL TURNING TOOLS

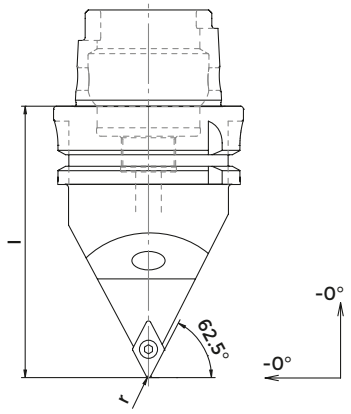

SDNCN

ICTM standard (HSK-T)

COD.	HSK	l	r	INSERT	SUPPORT PAD	BUSH	SCREW
H63TSDNCN11-145	63	145	0.8	DC..11T3..	SPDC11	VTA02	TR8

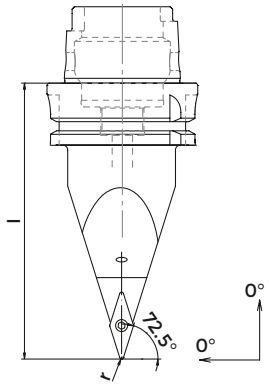

SVVCN

ICTM standard (HSK-T)

COD.	HSK	l	r	INSERT	SUPPORT PAD	BUSH	SCREW
H63TSVVCN16-90	63	90	0.8	VC..1604..	SPVC16	VTA02	TR8
H63TSVVCN16-145	63	145	0.8	VC..1604..	SPVC16	VTA02	TR8

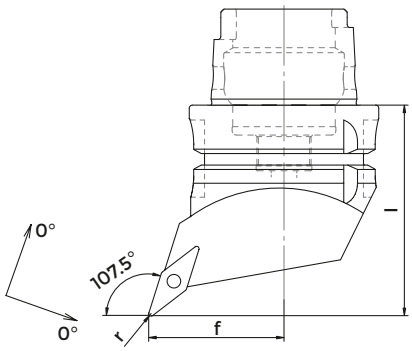

SVHC

ICTM standard (HSK-T)

COD.	HSK	l	f	r	INSERT	SUPPORT PAD	BUSH	SCREW
H63TSVHCL/R16	63	70	45	0.8	VC..1604..	SPVC16	VTA02	TR8

HSK-T EXTERNAL TURNING TOOLS

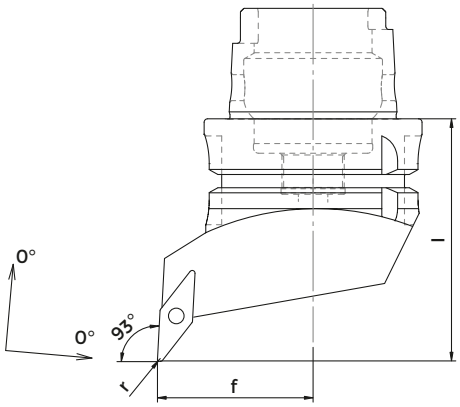

SVJC

ICTM standard (HSK-T)

COD.	HSK	l	f	r	INSERT	SUPPORT PAD	BUSH	SCREW
H63TSVJCL/R16	63	75	45	0.8	VC..1604..	SPVC16	VTA02	TR8
H100TSVJCL/R16	100	90,15	66,15	0,8	VC..1604..	SPVC16	VTA02	TR8

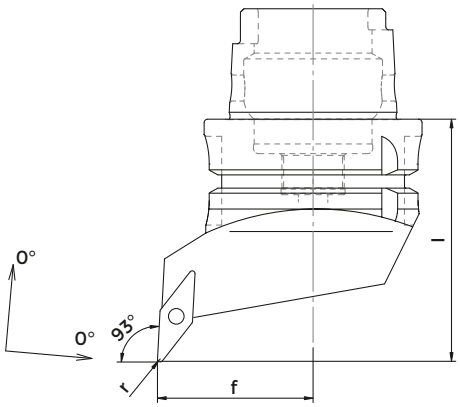

SVJB

ICTM standard (HSK-T)

COD.	HSK	l	f	r	INSERT	SUPPORT PAD	BUSH	SCREW
H63TSVJBL/R16	63	75	45	0.8	VB..1604..	SPVC16	VTA02	TR8

HSK-T EXTERNAL TURNING TOOLS FOR THREADING

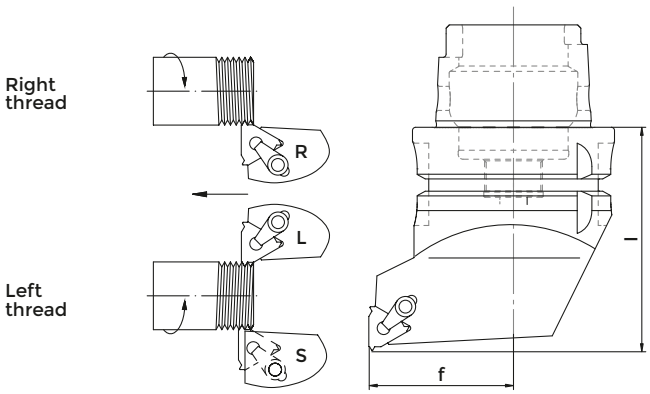

THE

ICTM standard (HSK-T)

COD.	HSK	l	f	r	SUPPORT PAD	SCREW	CLAMP
H63TTHEL16	63	70	45	16EL	SPTF16	VT27	SETK51
H63TTHER16	63	70	45	16ER	SPTF16	VT27	SETK51

HSK-T INTERNAL TURNING TOOLS

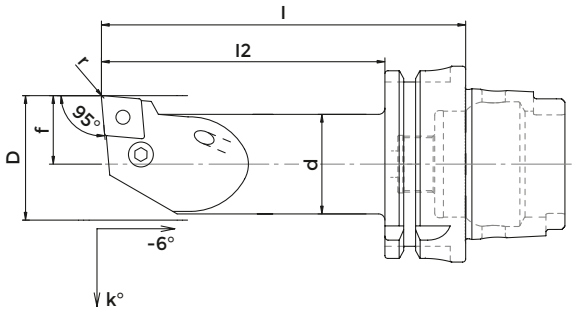

PCLN

ICTM standard (HSK-T)

COD.	HSK	d	l	l2	f	k°	D	r	INSERT	SUPPORT PAD	SHIM PIN	CLAMP	SCREW
H63T25PCLNL/R12	63	25	100	74	17	-12	32	0.8	CNM.1204..	-	-	LV02	VT11
H63T32PCLNL/R12	63	32	120	94	22	-10	40	0.8	CNM.1204..	SPCN12	SP02	LV02	VT02
H63T40PCLNL/R12	63	40	140	114	27	-10	50	0.8	CNM.1204..	SPCN12	SP02	LV02	VT02
H100T40PCLNL/R12	100	40	160	131	27	-10	50	0.8	CNM.1204..	SPCN12	SP02	LV02	VT02
H100T50PCLNL/R16	100	50	190	161	35	-8	60	0,8	CNM.1604..	SPCN16	SP03	LV03	VT03

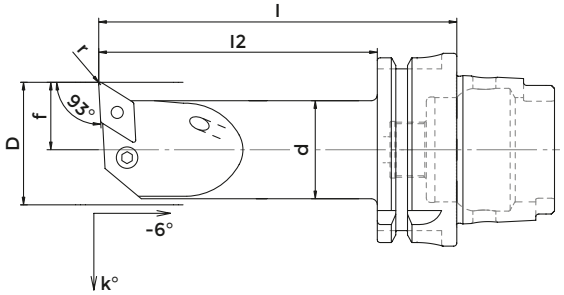

PDUN

ICTM standard (HSK-T)

COD.	HSK	d	l	l2	f	k°	D	r	INSERT	SUPPORT PAD	SHIM PIN	CLAMP	SCREW
H63T32PDUNL/R15	63	32	120	94	22	-15	40	0.8	DN..1506..	SPDN15	SP02	LV05	VT05
H63T40PDUNL/R15	63	40	140	114	27	-12	50	0.8	DN..1506..	SPDN15	SP02	LV05	VT05

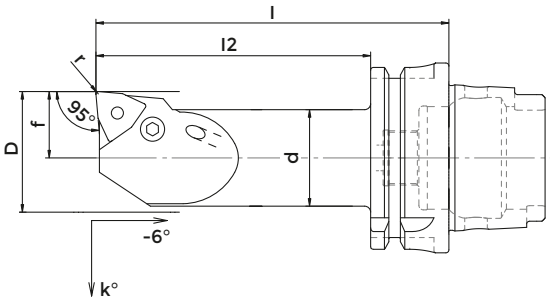

PWLN

ICTM standard (HSK-T)

COD.	HSK	d	l	l2	f	k°	D	r	INSERT	SUPPORT PAD	SHIM PIN	CLAMP	SCREW
H63T25PWLNL/R08	63	25	100	74	17	-12	32	0.8	WN..0804..	-	-	LV02	VT11
H63T32PWLNL/R08	63	32	120	94	22	-12	40	0.8	WN..0804..	SPWN08	SP02	LV02	VT02
H63T40PWLNL/R08	63	40	140	114	27	-10	50	0.8	WN..0804..	SPWN08	SP02	LV02	VT02

HSK-T INTERNAL TURNING TOOLS

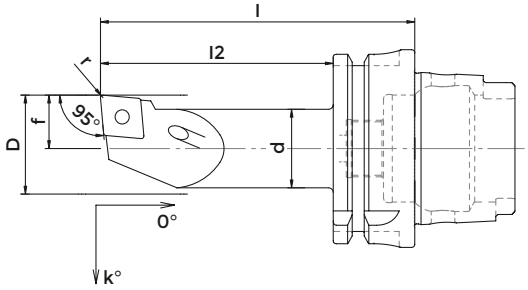

SCLC

ICTM standard (HSK-T)

COD.	HSK	d	l	l2	f	k°	D	r	INSERT	SUPPORT PAD	BUSH	SCREW
H63T20SCLCL/R09	63	20	85	59	13	-8	25	0.8	CC..09T3..	-	-	TR12
H63T25SCLCL/R12	63	25	100	74	17	-5	32	0.8	CC..1204..	-	-	TR13

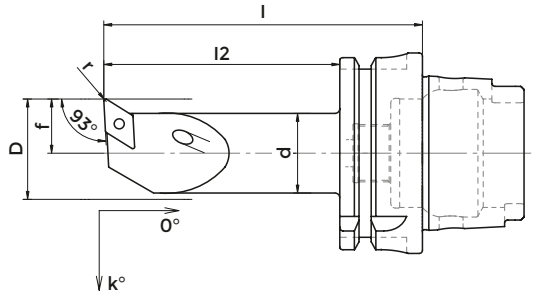

SDUC

ICTM standard (HSK-T)

COD.	HSK	d	l	l2	f	k°	D	r	INSERT	SUPPORT PAD	BUSH	SCREW
H63T20SDUCL/R11	63	20	85	59	13	-8	25	0.8	DC..11T3..	-	-	TR12
H63T25SDUCL/R11	63	25	100	74	17	-5	32	0.8	DC..11T3..	-	-	TR14
H63T32SDUCL/R11	63	32	120	94	22	-5	40	0.8	DC..11T3..	SPDC11	VTA02	TR8

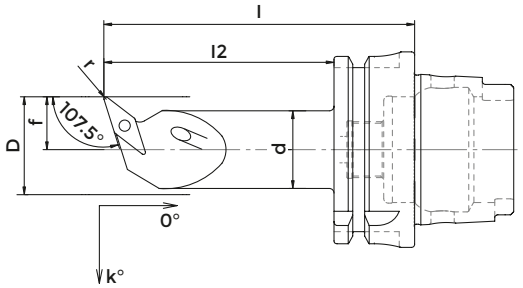

SVQB

ICTM standard (HSK-T)

COD.	HSK	d	l	l2	f	k°	D	r	INSERT	SUPPORT PAD	BUSH	SCREW
H63T32SVQBL/R16	63	32	120	94	22	-10	40	0.8	VB..1604..	SPVC16	VTA02	TR8
H63T40SVQBL/R16	63	40	140	114	27	-10	50	0.8	VB..1604..	SPVC16	VTA02	TR8
H100T50SVQBL/R16	100	50	190	161	35	-8	60	0.8	VB..1604..	SPVC16	VTA02	TR8

HSK-T INTERNAL TURNING TOOLS

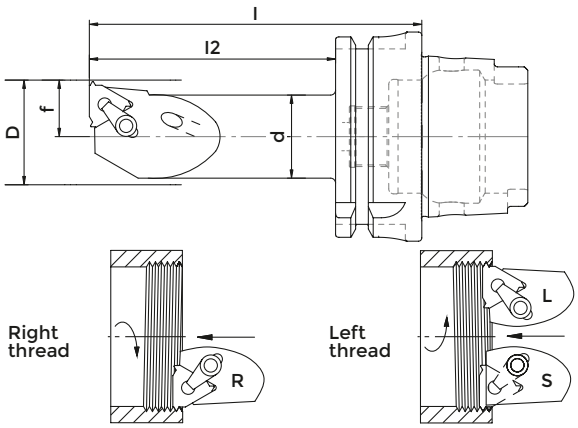

THE **ICTM standard (HSK-T)**

COD.	HSK	d	l	l2	f	D	INSERT	SUPPORT PAD	SCREW	CLAMP
H63T20THEL16	63	20	85	59	14	25	16IL	SPTF16	VT27	SETK51
H63T20THER16	63	20	85	59	14	25	16IR	SPTF16	VT27	SETK51

RADIAL TOOLHOLDER

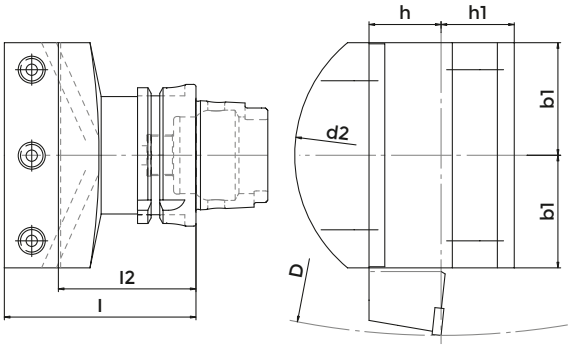

DIN 69893 T **ICTM standard (HSK-T)**

COD.	DESCRIPTION	HSK	d2	D	b1	h	h1	l	l2
141-11408	H63TRAD32/25	63	130	340	50	32/25	32.5	85	50
141-11609	H100TRAD32/32	100	135	340	52,5	32	32,5	97	65

AXIAL TOOLHOLDER

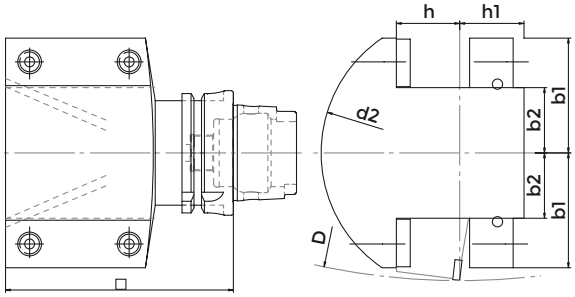

DIN 69893 T **ICTM standard (HSK-T)**

COD.	DESCRIPTION	HSK	d2	D	b1	b2	h	h1	l
142-11405	H63TAX25/32	63	110	305	40	15	32/25	26.5	120

AXIAL TOOLHOLDER

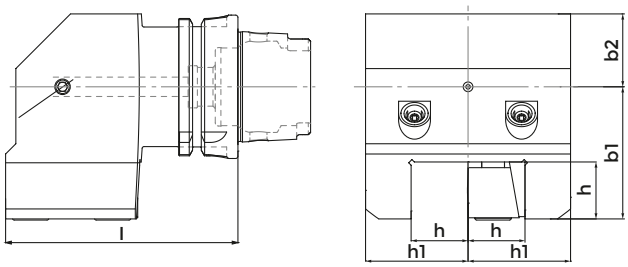

DIN 69893 T

ICTM standard (HSK-T)

COD.	DESCRIPTION	HSK	b1	b2	h	h1	l
142-11402	H63TAD25R	63	58	32	25	45	102

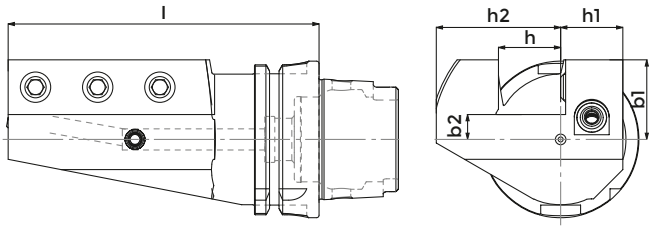

DIN 69893 T

ICTM standard (HSK-T)

COD.	DESCRIPTION	HSK	b1	b2	h	h1	h2	l
142-21401	H63TA25L	63	32	10	25	25	50	125
142-11403	H63TA25R	63	32	10	25	25	50	125
142-21604	HSK100TSL25X25	100	55	33	25	30	55	160
142-11603	HSK100TSR25X25	100	55	33	25	30	55	160
142-21603	HSK100TSL32X32	100	53	25	32	30	62	189
142-11604	HSK100TSR32X32	100	53	25	32	30	62	189

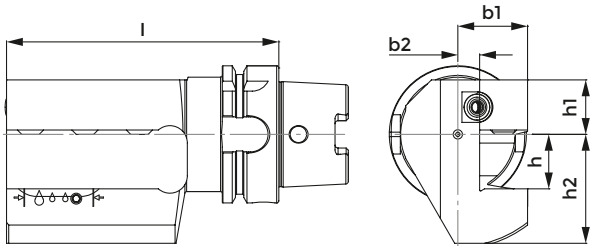

DIN 69893 - HSK63T

ICTM standard (HSK-T)

COD.	DESCRIPTION	HSK	b1	b2	h	h1	h2	l
142-21401-IC	H63TA25L-IC	63	32	10	25	25	50	125
142-11403-IC	H63TA25R-IC	63	32	10	25	25	50	125

note: with internal coolant

AXIAL TOOLHOLDER

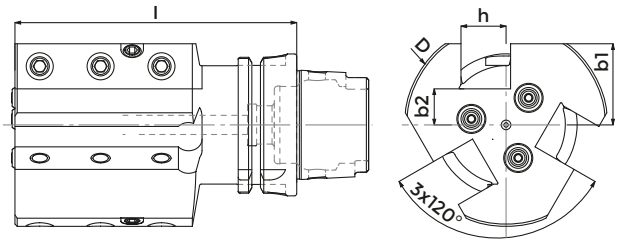

DIN 69893 T

ICTM standard (HSK-T)

COD.	DESCRIPTION	HSK	D	b1	b2	h	l
142-21402	H63TAT20L	63	90	36	16	20	125
142-11404	H63TAT20R	63	90	36	16	20	125

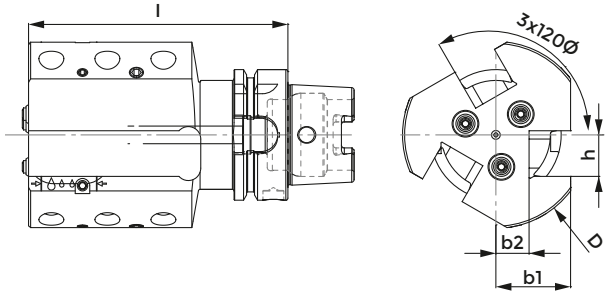

DIN 69893 - HSK63T

ICTM standard (HSK-T)

COD.	DESCRIPTION	HSK	b1	b2	h	D	l
142-21402-IC	H63TAT20L-IC	63	36	16	20	90	125
142-11404-IC	H63TAT20R-IC	63	36	16	20	90	125

note: with internal coolant

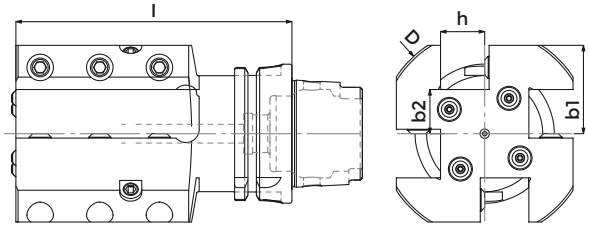

DIN 69893 T

ICTM standard (HSK-T)

COD.	DESCRIPTION	HSK	D	b1	b2	h	l
142-21403	H63TAQ20L	63	95	40	20	20	125
142-21404	H63TAQ20R	63	95	40	20	20	125

RADIAL TOOLHOLDER

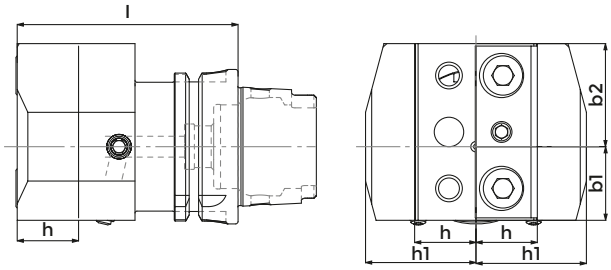

DIN 69893 T **ICTM standard (HSK-T)**

COD.	DESCRIPTION	HSK	b1	b2	h	h1	l
141-11406	H63TRD25R	63	30	42	25	45	90
141-11602	H100TRD25R	100	20	65	25	57	146

AXIAL TOOLHOLDER FOR CUT OFF TOOLS

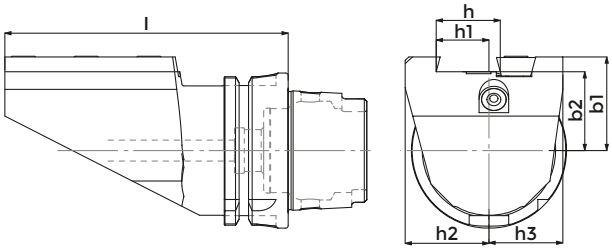

DIN 69893 T **ICTM standard (HSK-T)**

COD.	DESCRIPTION	HSK	b1	b2	h	h1	h2	h3	l
147-51405	H63TSCA26L	63	38	32	26	21.4	34	30	115
147-51406	H63TSCA26R	63	38	32	26	21.4	34	30	115
147-51407	H63TSCA32L	63	38	32	32	25	38	33	150
147-51408	H63TSCA32R	63	38	32	32	25	38	33	150

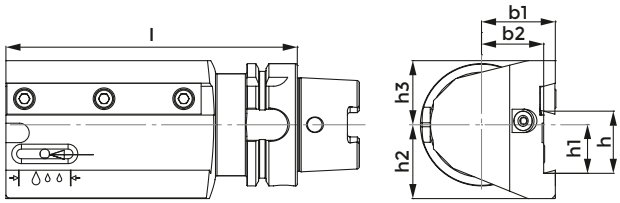

DIN 69893 - HSK63T **ICTM standard (HSK-T)**

COD.	DESCRIPTION	HSK	b1	b2	h	h1	h2	h3	l
147-51405-IC	H63TSCA26L-IC	63	38	32	26	21.4	34	30	115
147-51407-IC	H63TSCA32L-IC	63	38	32	32	25	38	33	150
147-51408-IC	H63TSCA32R-IC	63	38	32	32	25	38	33	150

note: with internal coolant

45° TOOLHOLDER

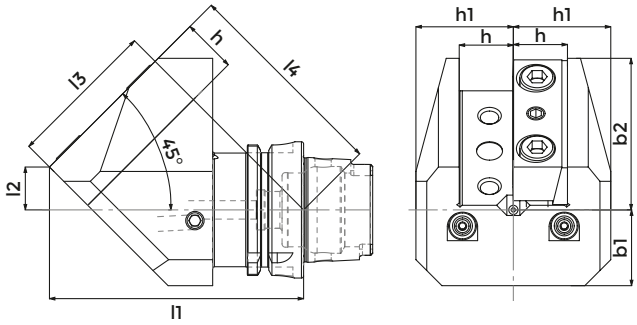

DIN 69893 T

ICTM standard (HSK-T)

COD.	DESCRIPTION	HSK	b1	b2	h	h1	l1	l2	l3	l4
141-11405	H63TARD25L	63	35	70	25	45	117.4	19.8	69	97

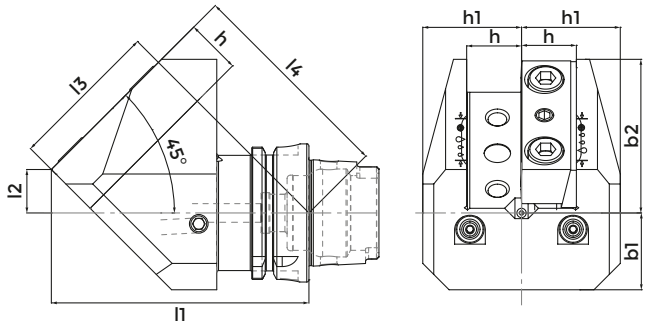

DIN 69893 - HSK63T

ICTM standard (HSK-T)

COD.	DESCRIPTION	HSK	b1	b2	h	h1	l1	l2	l3	l4
141-11405-IC	H63TARD25L-IC	63	35	70	25	45	117.4	19.8	69	97

note: with internal coolant

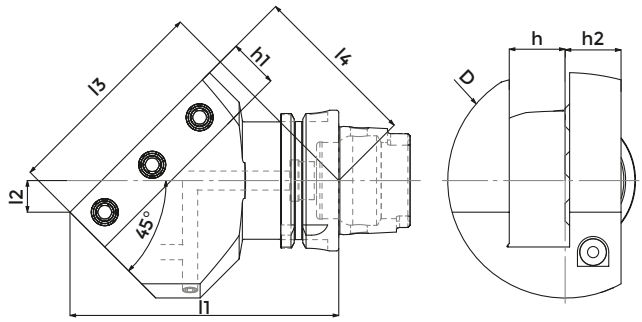

DIN 69893 T

ICTM standard (HSK-T)

COD.	DESCRIPTION	HSK	D	h	h1	h2	l1	l2	l3	l4
141-11407	H63TAR25L	63	105	25	22	25	120	14.1	95	75
141-21401	H63TAR25R	63	105	25	22	25	120	14.1	95	75
141-11601	H100TAR25L	100	115	25	22	28	172.4	24	139	105

AXIAL BORING BAR HOLDER

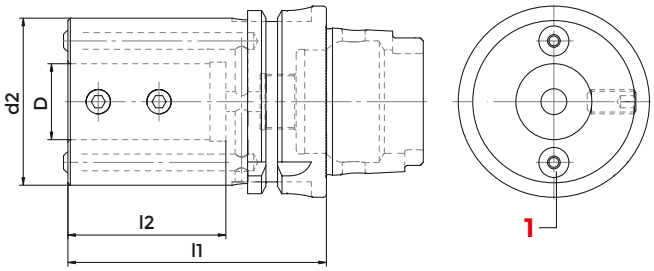

DIN 69893 T

ICTM standard

COD.	DESCRIPTION	HSK	D	d2	l1	l2	1 COOLANT NOOSE
145-21201	H40TAX-E2x08	40	8	32	60	37	833-001060
145-21202	H40TAX-E2x10	40	10	34	60	37	833-001060
145-21203	H40TAX-E2x12	40	12	36	65	40	833-001060
145-21204	H40TAX-E2x16	40	16	40	70	42	833-001060
145-21205	H40TAX-E2x20	40	20	45	70	42	833-001070
145-21402	H63TAX-E2x08	63	8	32	70	40	833-001070
145-21403	H63TAX-E2x10	63	10	38	75	45	833-001070
145-21404	H63TAX-E2x12	63	12	40	75	45	833-001070
145-21406	H63TAX-E2x16	63	16	45	80	50	833-001070
145-21408	H63TAX-E2x20	63	20	50	80	50	833-001070
145-21409	H63TAX-E2x25	63	25	55	85	52	833-001070
145-21410	H63TAX-E2x32	63	32	72	95	58	833-001070
145-21411	H63TAX-E2x40	63	40	80	120	72	833-001080
145-21606	H100TAX-E2x16	100	16	45	85	50	833-001070
145-21607	H100TAX-E2x20	100	20	50	85	50	833-001070
145-21601	H100TAX-E2x25	100	25	55	85	48	833-001070
145-21602	H100TAX-E2x32	100	32	72	95	58	833-001080
145-21603	H100TAX-E2x40	100	40	80	110	73	833-001080
145-21604	H100TAX-E2x50	100	50	90	120	82	833-001080

ACCESSORIES

p. 690

AXIAL HOLDER FOR INDEXABLE INSERT DRILLS WITH INTERNAL COOLANT SUPPLY

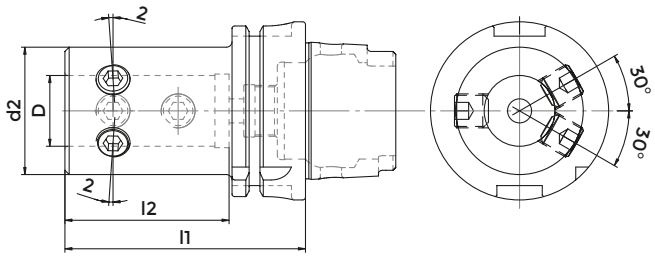

DIN 69893 T **ICTM standard**

COD.	DESCRIPTION	HSK	d	d2	l1	l2
145-11406	H63TAX-E1x16	63	16	36	80	54
145-11408	H63TAX-E1x20	63	20	40	80	54
145-11409	H63TAX-E1x25	63	25	45	85	59
145-11410	H63TAX-E1x32	63	32	52	90	63
145-11411	H63TAX-E1x40	63	40	65	105	73

ADAPTER WITH HSK ATTACHMENT

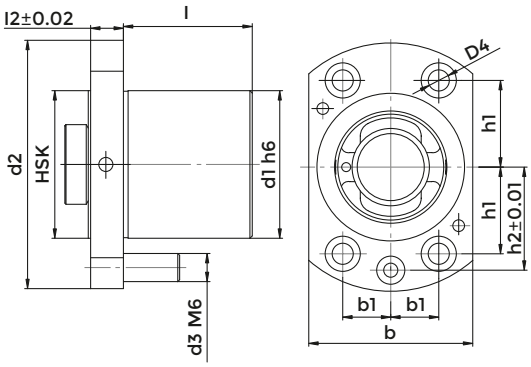

DIN 69893 A+C **ICTM standard**

COD.	HSK	d1	d2	d3	D4	l	l2	b	b1	h1	h2
H40TBSL	40	40	68	8	10	33	12	45	13,5	23	27
H63TBSL	63	63	106	12	9	55	15	70	20.5	37	44
H100TBSL	100	90	142	12	18	88	24	105	37	47	60

PROTECTIVE CAP

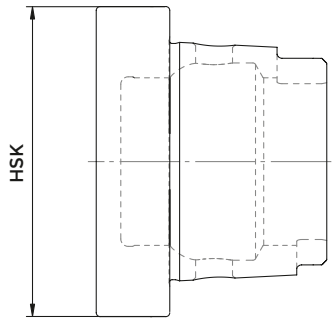

DIN 69893 A+C

COD.	HSK
H32ATP	32
H40ATP	40
H50ATP	50
H63ATP	63
H100ATP	100

BLANK TOOLHOLDER FOR SPECIAL TOOLS

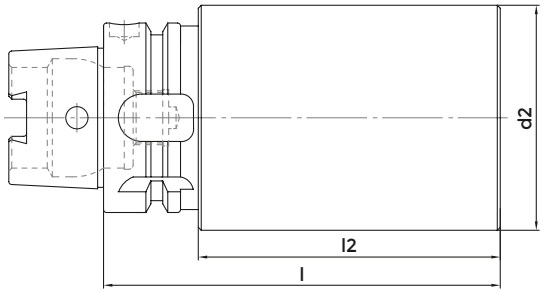

DIN 69893 T

ICTM standard

COD.	HSK	d2	l	l2
H63T080190SML	63	80	190	158
H63T130095SML	63	130	95	63
HSK100TH100D135	100	135	100	54
HSK100TH305D99	100	99	305	259
HSK100TH220D100	100	100	220	174
HSK100TH189D135	100	135	189	143

READY, ALWAYS.

POLYGONAL TOOLHOLDERS AND TURNING TOOLS FOR TURNING

DIN ISO 26623-1

POLYGONAL SHANKS DATA SHEET

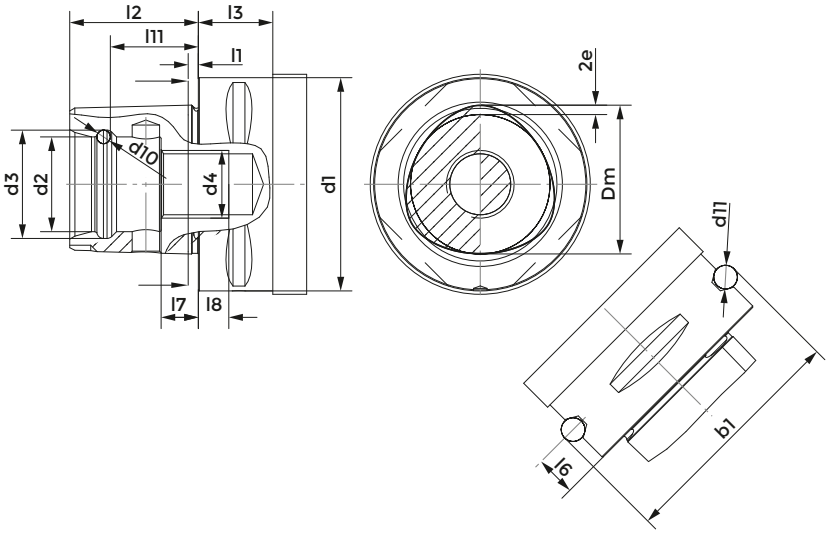

DIN ISO 26623-1

	C32	C40	C50	C63	C80	C80X	C100
b1	39	46	59,3	70,7	86	110	110
d1	32	40	50	63	80	100	100
d2	15	18	21	28	32	32	43
d3	16,5	20	24	32	38	38	50,5
d4	M12x1,5	M14x1,5	M16x1,5	M20x2	M20x2	M20x2	M24x2
d10	1,5	2	3	4	6	6	7,5
d11	5	5	7	7	7	10	10
Dm	22	28	35	44	55	55	72
e	0,7	0,9	1,12	1,4	2	2	2,8
l1	2,5	2,5	3	3	3	3	3
l2	19	24	30	38	48	48	60
l3	15	20	20	22	30	32	36
l6	6	8	10	12	12	16	16
l7	6	9	10	11	20	20	20
l8	6	6	7	9	0	0	10
l11	13,5	17,5	22	26	34	34	42,5

AXIAL BORING BAR HOLDER

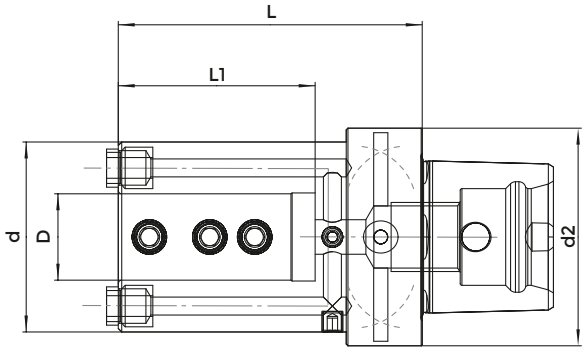

DIN ISO 26623-1

COD.	POLYGONAL	d	d2	D	L	L1	COOLANT NOOSE
C40H60D08E2	C40	33	40	8	60	37	833-001060
C40H65D10E2	C40	35	40	10	65	37	833-001060
C40H65D12E2	C40	36	40	12	65	40	833-001060
C40H70D16E2	C40	40	40	16	70	42	833-001060
C40H70D20E2	C40	45	40	20	70	42	833-001060
C50H70D08E2	C50	32	50	8	70	40	833-001070
C50H70D10E2	C50	35	50	10	70	37	833-001070
C50H70D12E2	C50	40	50	12	70	40	833-001070
C50H80D16E2	C50	45	50	16	80	50	833-001070
C50H80D20E2	C50	50	50	20	80	50	833-001070
C50H80D25E2	C50	55	50	25	80	50	833-001070
C63H80D08E2	C63	32	63	8	80	40	833-001060
C63H80D10E2	C63	38	63	10	80	45	833-001070
C63H80D12E2	C63	40	63	12	80	45	833-001070
C63H80D16E2	C63	45	63	16	80	50	833-001070
C63H80D20E2	C63	50	63	20	80	50	833-001070
C63H80D25E2	C63	57	63	25	88	57	833-001070
C63H95D32E2	C63	72	63	32	95	58	833-001070
C63H105D40E2	C63	80	63	40	105	72	833-001070
C80H85D20E2	C80	50	80	20	85	48	833-001070
C80H85D25E2	C80	55	80	25	85	48	833-001070
C80H95D32E2	C80	72	80	32	95	58	833-001080
C80H110D40E2	C80	80	80	40	110	73	833-001080

ACCESSORIES

p. 690

POLYGONAL FLANGE KIT

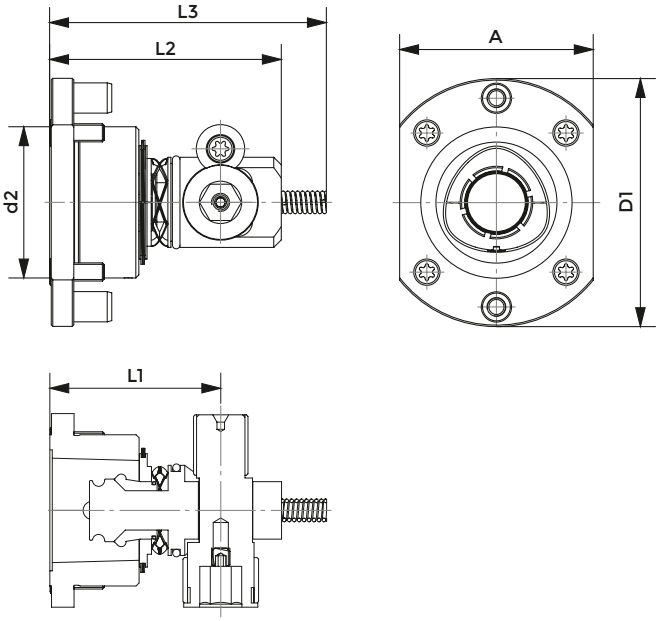

COD.	POLYGONAL	d2	d1	L1	L2	L3	A
CXC32-10	C32	32	54	40.5	55	67	38
CXC40-10	C40	40	67	48.5	65	80	48
CXC50-10	C50	50	82	56.5	75	91.5	64
CXC63-10	C63	63	105	74	93	112.5	84

INSTRUCTIONS TO CLAMP THE TOOLHOLDER TO THE MANUAL DRIVE (CAM) CLAMPING UNIT

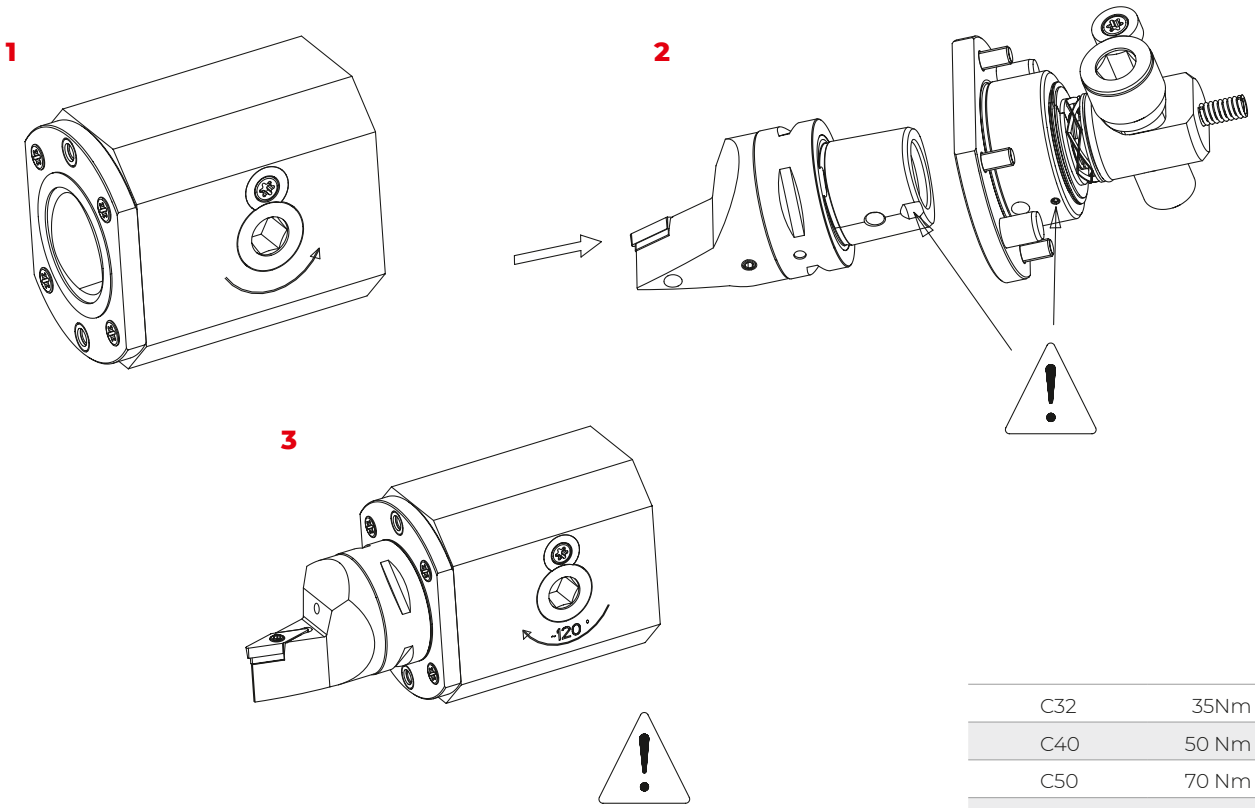

C32	35Nm
C40	50 Nm
C50	70 Nm
C63	90 Nm

90° POLYGONAL TOOLHOLDER

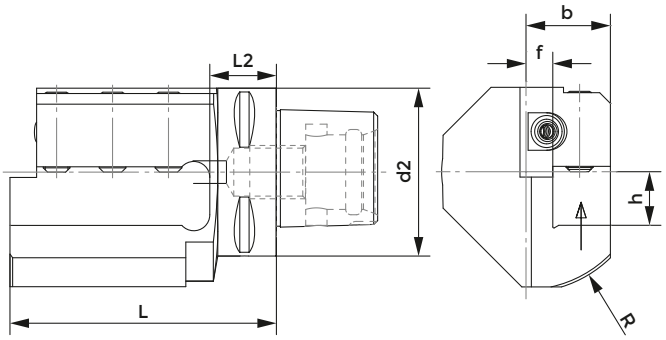

DIN ISO 26623-1

COD.	POLYGONAL	d2	L	L1	b	R	f	h
C50-AD2020R/L	C50	50	98	22	32	41,5	12	20
C63-AD2020R/L	C63	63	100	24	32	41,5	12	20
C63-AD2525R/L	C63	63	130	28	35	49	10	25
C63-AD3232R/L	C63	63	134	28	39	59	7	32

90° POLYGONAL TOOLHOLDER

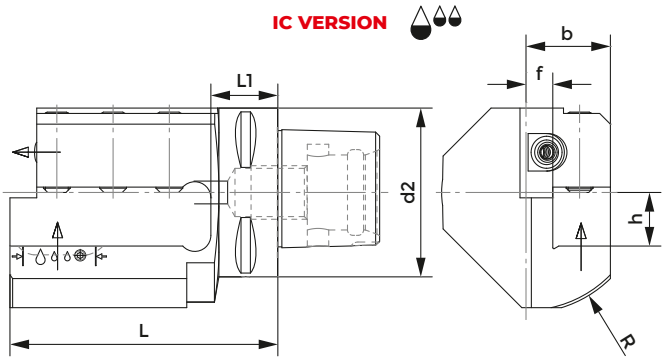

DIN ISO 26623-1

COD.	POLYGONAL	d2	L	L1	b	R	f	h
C63-AD2020R/L-IC	C63	63	100	24	32	41,5	12	20
C63-AD2525R/L-IC	C63	63	130	28	35	49	10	25
C63-AD3232R/L-IC	C63	63	134	28	39	59	7	32

PROTECTIVE CAP

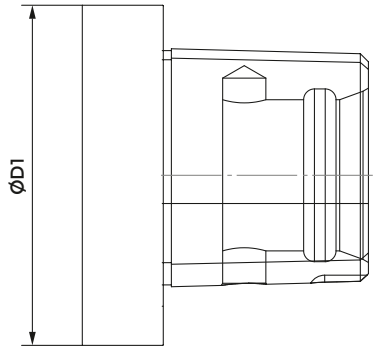

COD.	d
C40-TP	40
C50-TP	50
C63-TP	63
C80-TP	80

45° POLYGONAL TOOLHOLDER

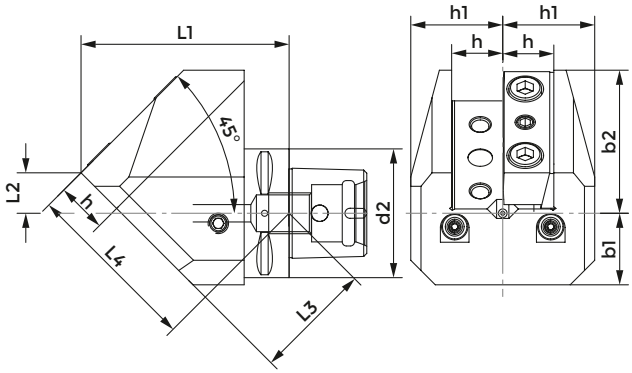

DIN ISO 26623-1

COD.	POLYGONAL	d2	b1	b2	h	h1	L1	L2	L3	L4
C63-ARD2525-45	C63	63	35	70	25	45	102	20	58	86

45° POLYGONAL TOOLHOLDER

IC VERSION

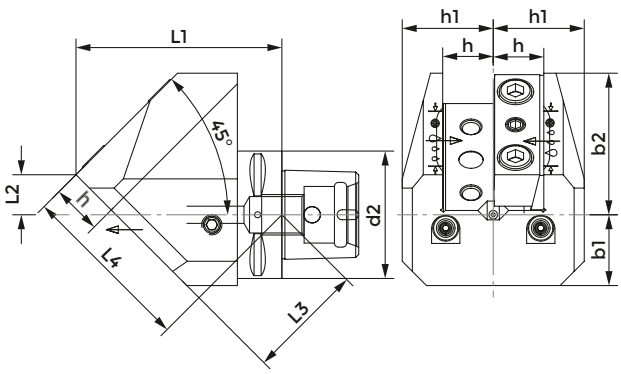

DIN ISO 26623-1

COD.	POLYGONAL	d2	b1	b2	h	h1	L1	L2	L3	L4
C63-ARD2525-45-IC	C63	63	35	70	25	45	102	20	58	86

45° POLYGONAL TOOLHOLDER

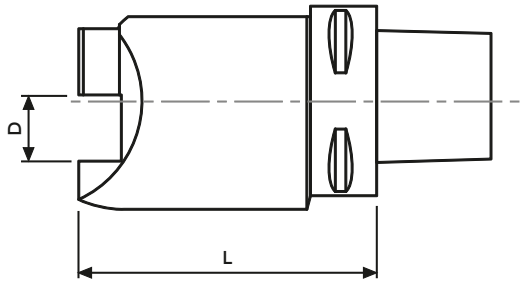

DIN ISO 26623-1

COD.	POLYGONAL	D	L
C63AR25R/L	C63	25	130

POLYGONAL RADIAL TOOLHOLDER

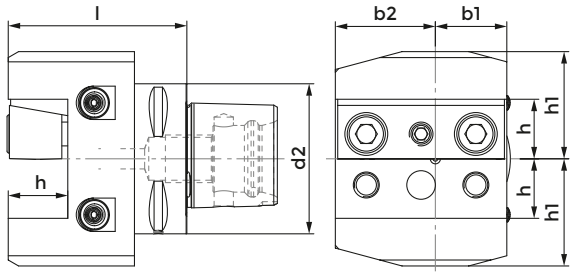

DIN ISO 26623-1

COD.	POLYGONAL	d2	b1	b2	h	h1	l
C63RD25R	C63	63	30	42	25	45	75

POLYGONAL AXIAL TOOLHOLDER

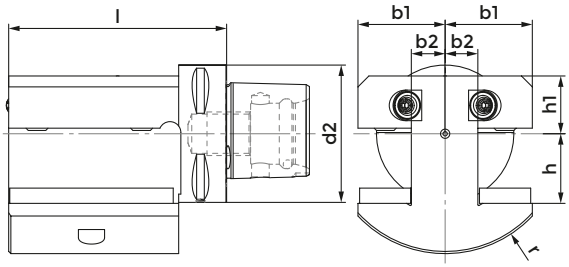

DIN ISO 26623-1

COD.	POLYGONAL	d2	b1	b2	h	h1	l	r
C63AX25/32	C63	63	40	15	25/32	26.5	110	55

POLYGONAL AXIAL TOOLHOLDER

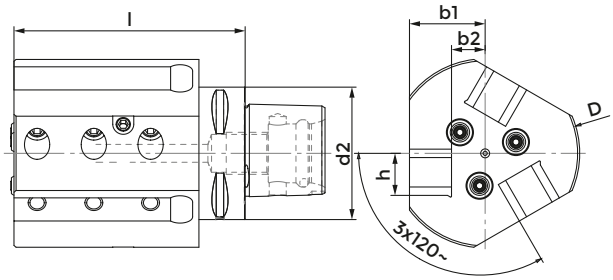

DIN ISO 26623-1

COD.	POLYGONAL	d2	b1	b2	h	l	D
C63AT20R	C63	63	36	16	20	110	90
C63AT20L	C63	63	36	16	20	110	90

POLYGONAL AXIAL TOOLHOLDER FOR CUT OFF TOOLS

IC VERSION

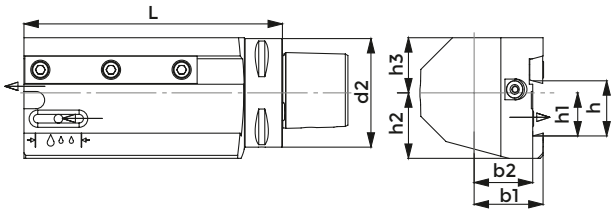

DIN ISO 26623-1

COD.	POLYGONAL	d2	b1	b2	h	h1	h2	h3	L
C50-SCAR26R/L-IC	C50	50	33	27	26	21,4	34	30	115
C63-SCAR26R/L-IC	C63	63	40	34	26	21,4	34	31,5	115
C63-SCAR32R/L-IC	C63	63	40	34	32	25	38	32	150

POLYGONAL AXIAL TOOLHOLDER

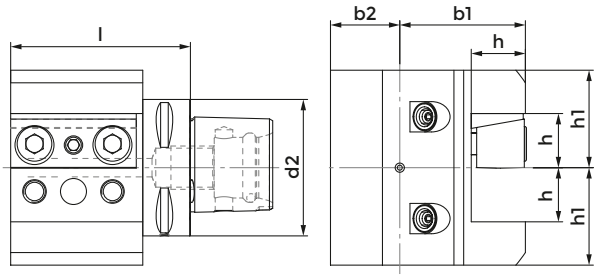

DIN ISO 26623-1

COD.	POLYGONAL	d2	b1	b2	h	h1	l
C63AD25R	C63	63	58	32	25	45	83

COOLANT SUPPLY UNIT

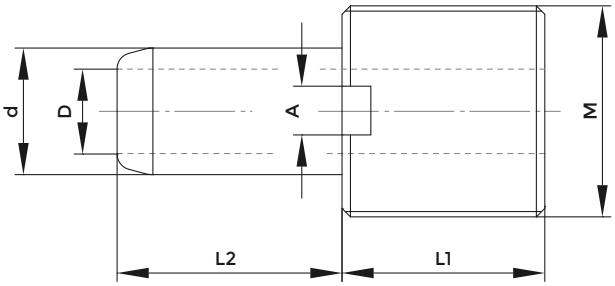

DIN ISO 26623-1

COD.	POLYGONAL	M	d	D	L1	L2	A
832-016120	C40	M14x1,5	6	4	12	13,5	3
832-016090	C50	M16x1,5	7	5	14	14.4	3
832-016100	C63	M20x2	8	6	15	15.7	3
832-016130	C80	M20x2	10	8	15	16,6	3

KEY FOR COOLANT SUPPLY UNIT

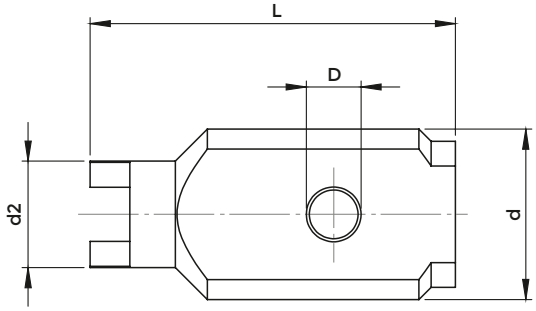

DIN ISO 26623-1

COD.	POLYGONAL	d	d2	D	L
816-204026	C50	20.5	14	6	50
816-204027	C63	27.5	17.5	6	60

TOOLHOLDER WITH SQUARE SHANK AND WITH POLYGONAL INTERFACE

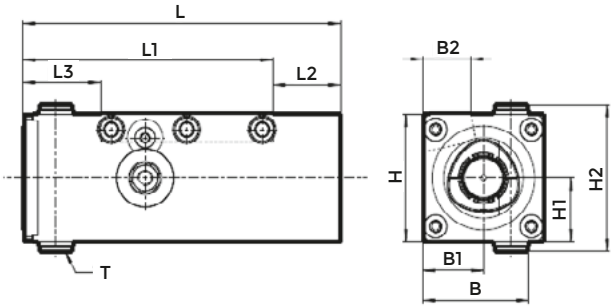

DIN ISO 26623-1

COD.	MISURA	L	L1	L2	L3	B	B1	B2	H	H1	H2	T
Q50L125C40R/L	C40	125	100	25	31	42	24	19	50	25	57,5	G 1/8

EXTERNAL TURNING TOOLS

DCM

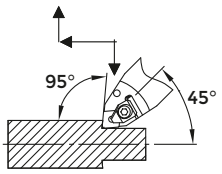

p. 291

SCM

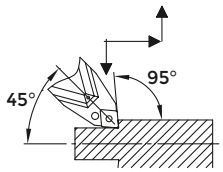

p. 295

SDJ

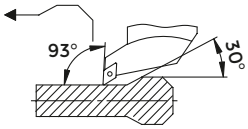

p. 294

DDM

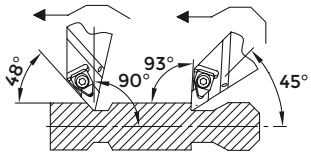

p. 291

SVM

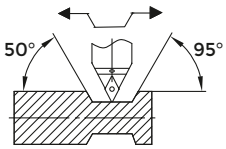

p. 296

SVJ

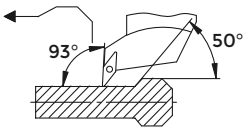

p. 295

PCL DCL

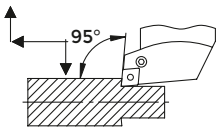

p. 292 p. 290

PWL DWL

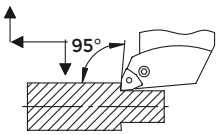

p. 293 p. 290

THE

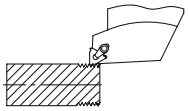

p. 296

PDJ

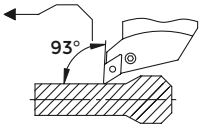

p. 292

SCL

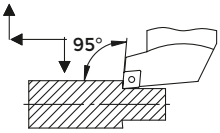

p. 293

SVH

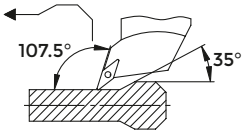

p. 294

INTERNAL TURNING TOOLS

PCL

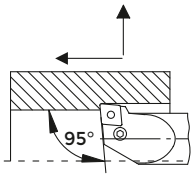

p. 297

PWL

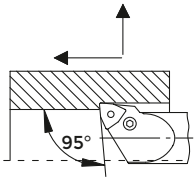

p. 297

SDU

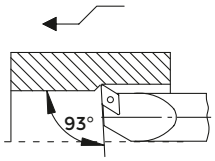

p. 299

THE

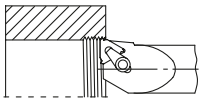

p. 300

SCL

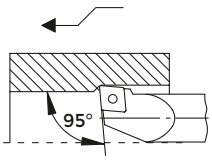

p. 298

SVQ

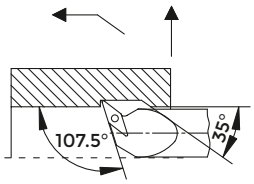

p. 300

IDENTIFICATION OF ISO 26623-1
POLYGONAL EXTERNAL TURNING TOOLS

Coding example C 50 S C L C L 35 060 12

C	Type of holder	DIN ISO 26623-1					
50	Holder size		40 - Ø40	50 - Ø50	63 - Ø63		
S	Clamping system	D		P		S	
C	Insert Shape	C	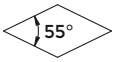 D	S	T	V	W
L	Shape of turning tools	60 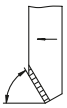 E	107.5 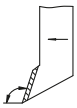 H	93 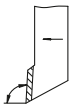 J	95 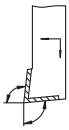 L	50 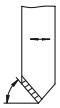 M	
C	Clearance angle	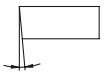 B		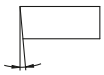 C		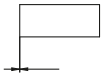 N	
L	Feeding direction	L		R		N	
35	"f" dimension	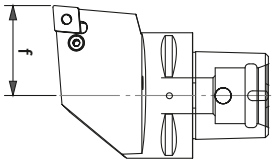 35					
060	"l" dimension	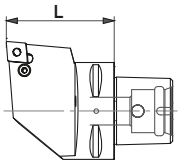 060					
12	Insert cutting edge lenght	C - D - E - M - V		S		T	W

TURNING MODULAR SYSTEM

- Adopting the famous DIN ISO 26623-1, in the several versions, and maintaining an interchangeability with the attacks for working centers, KINTEK offers the possibility to reduce, drastically, the times of set-up.
- Maximum rapidity in the tool change
- Great rigidity thanks to the big support surface
- The same cutting position
- Reduction of the vibrations
- Precision of interchangeability
- Optimal repeatability of positioning to the change tool: maximum error +/- 0,002 mm

IDENTIFICATION OF ISO 26623-1 POLYGONAL INTERNAL TURNING TOOLS

Coding example C 50 S C L C L 22 110 12

C	Type of holder	DIN ISO 26623-1				
50	Holder size		40 - Ø40	50 - Ø50	63 - Ø63	
S	Clamping system	P		S		
C	Insert Shape	C	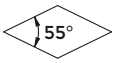 D	T	V	W
L	Shape of turning tools	95 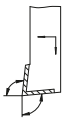 L	15 Q	93 U	60 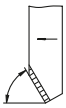 E	
C	Clearance angle	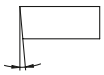 B	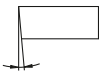 C	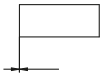 N	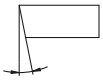 P	
L	Feeding direction	L	R	N		
35	"f" dimension	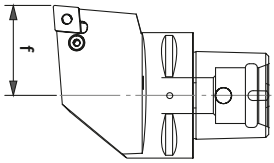 35				
060	"l" dimension	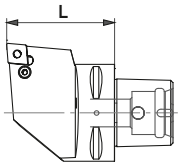 060				
12	Insert cutting edge lenght	C - D - V	T	W		

ISO 26623-1 POLYGONAL EXTERNAL TURNING TOOLS

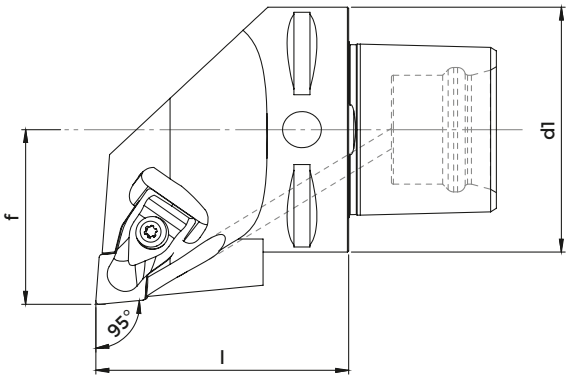

DCLN

COD.	DESCRIPTION	POLYGONAL	d1	l	f	INSERT	BRACKET	SUPPORT PAD	SCREW
C50DCLNL3506012	UTENSILE C50-DCLNL12	C50	50	60	35	CN..1204..	831-003070	843-022061	811-276013
C50DCLNR3506012	UTENSILE C50-DCLNR12	C50	50	60	35	CN..1204..	831-003070	843-022061	811-276013
C63DCLNL4506512	UTENSILE C63-DCLNL12	C63	63	65	45	CN..1204..	831-003070	843-022061	811-276013
C63DCLNR4506512	UTENSILE C63-DCLNR12	C63	63	65	45	CN..1204..	831-003070	843-022061	811-276013
C63DCLNL4506516	UTENSILE C63-DCLNL16	C63	63	65	45	CN..1604..	831-003080	843-021221	811-296004
C63DCLNR4506516	UTENSILE C63-DCLNR16	C63	63	65	45	CN..1604..	831-003080	843-021221	811-296004

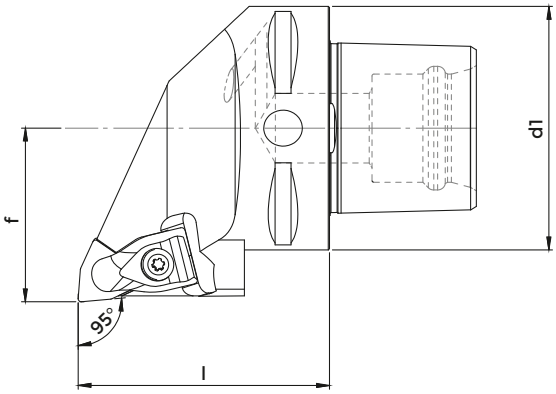

DWLN

COD.	DESCRIPTION	POLYGONAL	d1	l	f	INSERT	BRACKET	SUPPORT PAD	SCREW
C50DWLNL3506008	UTENSILE C50-DWLNL08	C50	50	60	35	WN..0804..	831-003070	843-081131	811-276013
C50DWLNR3506008	UTENSILE C50-DWLNR08	C50	50	60	35	WN..0804..	831-003070	843-081131	811-276013
C63DWLNL4506508	UTENSILE C63-DWLNL08	C63	63	65	45	WN..0804..	831-003070	843-081131	811-276013
C63DWLNR4506508	UTENSILE C63-DWLNR08	C63	63	65	45	WN..0804..	831-003070	843-081131	811-276013

ISO 26623-1 POLYGONAL EXTERNAL TURNING TOOLS

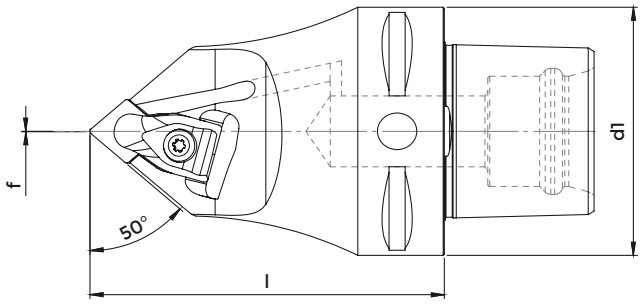

DCMN

COD.	DESCRIPTION	POLYGONAL	d1	l	f	INSERT	BRACKET	SUPPORT PAD	SCREW
C63DCMNN0009012	UTENSILE C63-DCMNN12	C63	63	90	0	CN..1204..	831-003070	843-022061	811-276013
C63DCMNN0011512	UTENSILE C63-DCMNN12	C63	63	115	0	CN..1204..	831-003070	843-022061	811-276013

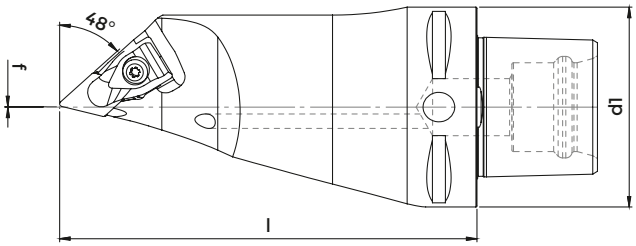

DDMN

COD.	DESCRIPTION	POLYGONAL	d1	l	f	INSERT	BRACKET	SUPPORT PAD	SCREW
C63DDMNL0013015	UTENSILE C63-DDMNL15	C63	63	130	0	DN..1506..	831-003070	843-031241	811-276013

ISO 26623-1 POLYGONAL EXTERNAL TURNING TOOLS

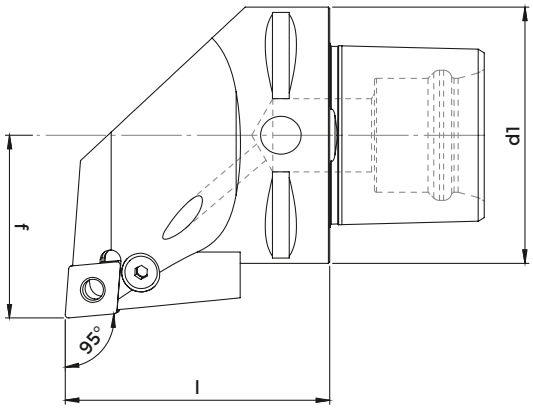

PCLN

COD.	DESCRIPTION	POLYGONAL	d1	l	f	INSERT	LEVER	SCREW	SUPPORT PAD	SPRING
C40PCLNL2705012	UTENSILE C40-PCLNL12	C40	40	50	27	CN..1204..	831-001540	811-301153	843-022061	815-321400
C40PCLNR2705012	UTENSILE C40-PCLNR12	C40	40	50	27	CN..1204..	831-001540	811-301153	843-022061	815-321400
C50PCLNL3506012	UTENSILE C50-PCLNL12	C50	50	60	35	CN..1204..	831-001540	811-301153	843-022061	815-321400
C50PCLNR3506012	UTENSILE C50-PCLNR12	C50	50	60	35	CN..1204..	831-001540	811-301153	843-022061	815-321400
C63PCLNL4506512	UTENSILE C63-PCLNL12	C63	63	65	45	CN..1204..	831-001540	811-301153	843-022061	815-321400
C63PCLNR4506512	UTENSILE C63-PCLNR12	C63	63	65	45	CN..1204..	831-001540	811-301153	843-022061	815-321400
C63PCLNL4506516	UTENSILE C63-PCLNL16	C63	63	65	45	CN..1604..	831-001550	811-301154	843-021221	815-321410
C63PCLNR4506516	UTENSILE C63-PCLNR16	C63	63	65	45	CN..1604..	831-001550	811-301154	843-021221	815-321410

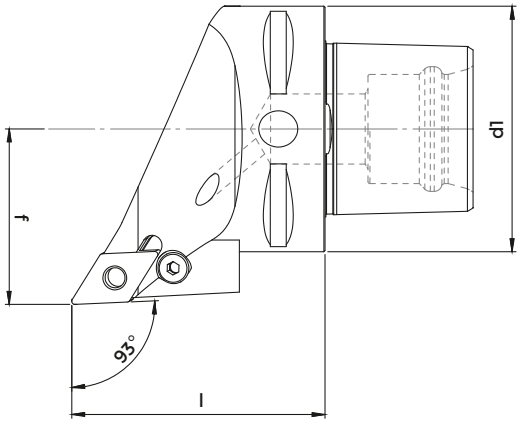

PDJN

COD.	DESCRIPTION	POLYGONAL	d1	l	f	INSERT	LEVER	SCREW	SUPPORT PAD	SPRING
C50PDJNL3506015	UTENSILE C50-PDJNL15	C50	50	60	35	DN..1506..	831-001560	811-301155	843-031241	815-321400
C50PDJNR3506015	UTENSILE C50-PDJNR15	C50	50	60	35	DN..1506..	831-001560	811-301155	843-031241	815-321400
C63PDJNL4506515	UTENSILE C63-PDJNL15	C63	63	65	45	DN..1506..	831-001560	811-301155	843-031241	815-321400
C63PDJNR4506515	UTENSILE C63-PDJNR15	C63	63	65	45	DN..1506..	831-001560	811-301155	843-031241	815-321400

ISO 26623-1 POLYGONAL EXTERNAL TURNING TOOLS

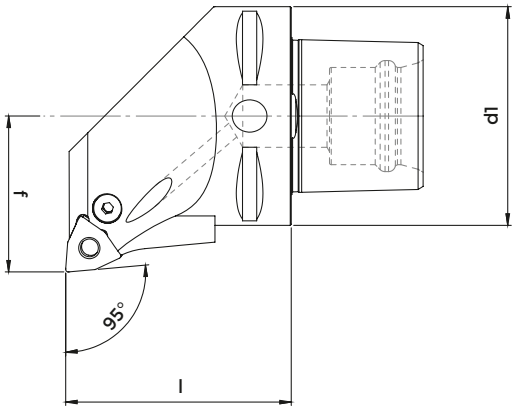

PWLN

COD.	DESCRIPTION	POLYGONAL	d1	l	f	INSERT	LEVER	SCREW	SUPPORT PAD	SPRING
C40PWLNL2705008	UTENSILE C40-PWLNL08	C40	40	50	27	WN..0804..	831-001540	811-301153	843-081131	815-321400
C40PWLNR2705008	UTENSILE C40-PWLNR08	C40	40	50	27	WN..0804..	831-001540	811-301153	843-081131	815-321400
C50PWLNL3506008	UTENSILE C50-PWLNL08	C50	50	60	35	WN..0804..	831-001540	811-301153	843-081131	815-321400
C50PWLNR3506008	UTENSILE C50-PWLNR08	C50	50	60	35	WN..0804..	831-001540	811-301153	843-081131	815-321400
C63PWLNL4506508	UTENSILE C63-PWLNL08	C63	63	65	45	WN..0804..	831-001540	811-301153	843-081131	815-321400
C63PWLNR4506508	UTENSILE C63-PWLNR08	C63	63	65	45	WN..0804..	831-001540	811-301153	843-081131	815-321400

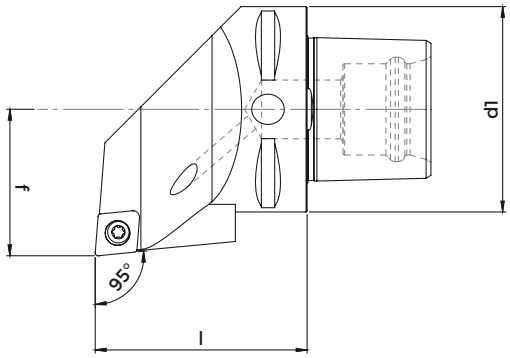

SCLC

COD.	DESCRIPTION	POLYGONAL	d1	l	f	INSERT	SUPPORT PAD	BUSH	SCREW
C40SCLCL2705012	UTENSILE C40-SCLCL12	C40	40	50	27	CC..1204..	843-022051	811-301156	811-266006
C40SCLCR2705012	UTENSILE C40-SCLCR12	C40	40	50	27	CC..1204..	843-022051	811-301156	811-266006
C50SCLCL3506012	UTENSILE C50-SCLCL12	C50	50	60	35	CC..1204..	843-022051	811-301156	811-266006
C50SCLCR3506012	UTENSILE C50-SCLCR12	C50	50	60	35	CC..1204..	843-022051	811-301156	811-266006
C63SCLCL4506512	UTENSILE C63-SCLCL12	C63	63	65	45	CC..1204..	843-022051	811-301156	811-266006
C63SCLCR4506512	UTENSILE C63-SCLCR12	C63	63	65	45	CC..1204..	843-022051	811-301156	811-266006

ISO 26623-1 POLYGONAL EXTERNAL TURNING TOOLS

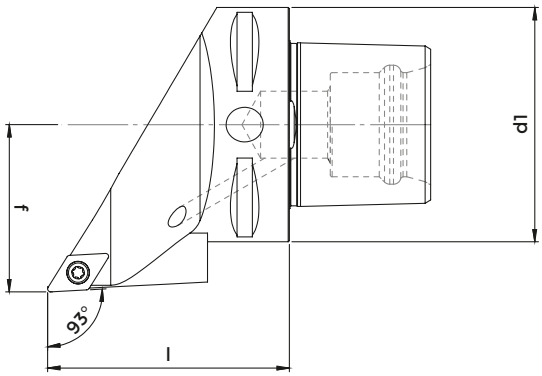

SDJC

COD.	DESCRIPTION	POLYGONAL	d1	l	f	INSERT	SUPPORT PAD	BUSH	SCREW
C40SDJCL2705011	UTENSILE C40-SDJCL11	C40	40	50	27	DC..11T3..	843-032031	811-301157	811-246021
C40SDJCR2705011	UTENSILE C40-SDJCR11	C40	40	50	27	DC..11T3..	843-032031	811-301157	811-246021
C50SDJCL3506011	UTENSILE C50-SDJCL11	C50	50	60	35	DC..11T3..	843-032031	811-301157	811-246021
C50SDJCR3506011	UTENSILE C50-SDJCR11	C50	50	60	35	DC..11T3..	843-032031	811-301157	811-246021
C63SDJCL4506511	UTENSILE C63-SDJCL11	C63	63	65	45	DC..11T3..	843-032031	811-301157	811-246021
C63SDJCR4506511	UTENSILE C63-SDJCR11	C63	63	65	45	DC..11T3..	843-032031	811-301157	811-246021

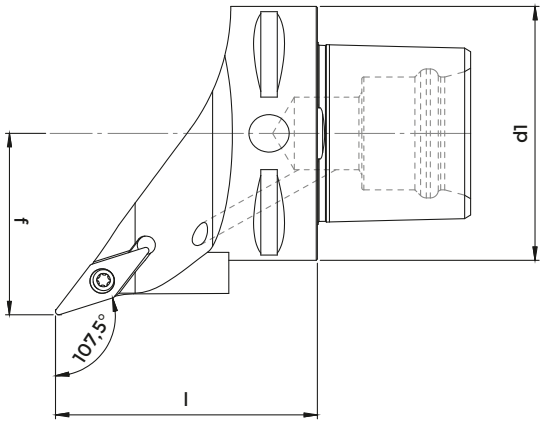

SVHB

COD.	DESCRIPTION	POLYGONAL	d1	l	f	INSERT	SUPPORT PAD	BUSH	SCREW
C40SVHBL2705016	UTENSILE C40-SVHBL16	C40	40	50	27	VB..1604..	843-062071	811-301157	811-246021
C40SVHBR2705016	UTENSILE C40-SVHBR16	C40	40	50	27	VB..1604..	843-062071	811-301157	811-246021
C50SVHBL3506016	UTENSILE C50-SVHBL16	C50	50	60	35	VB..1604..	843-062071	811-301157	811-246021
C50SVHBR3506016	UTENSILE C50-SVHBR16	C50	50	60	35	VB..1604..	843-062071	811-301157	811-246021
C63SVHBL4506516	UTENSILE C63-SVHBL16	C63	63	65	45	VB..1604..	843-062071	811-301157	811-246021
C63SVHBR4506516	UTENSILE C63-SVHBR16	C63	63	65	45	VB..1604..	843-062071	811-301157	811-246021

ISO 26623-1 POLYGONAL EXTERNAL TURNING TOOLS

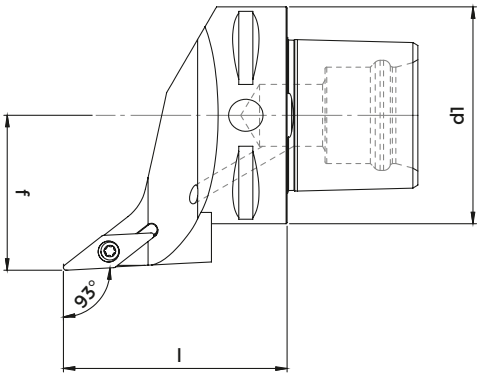

SVJB

COD.	DESCRIPTION	POLYGONAL	d1	l	f	INSERT	SUPPORT PAD	BUSH	SCREW
C40SVJBL2705016	UTENSILE C40-SVJBL16	C40	40	50	27	VB..1604..	843-062071	811-301157	811-246021
C40SVJBR2705016	UTENSILE C40-SVJBR16	C40	40	50	27	VB..1604..	843-062071	811-301157	811-246021
C50SVJBL3506016	UTENSILE C50-SVJBL16	C50	50	60	35	VB..1604..	843-062071	811-301157	811-246021
C50SVJBR3506016	UTENSILE C50-SVJBR16	C50	50	60	35	VB..1604..	843-062071	811-301157	811-246021
C63SVJBL4506516	UTENSILE C63-SVJBL16	C63	63	65	45	VB..1604..	843-062071	811-301157	811-246021
C63SVJBR4506516	UTENSILE C63-SVJBR16	C63	63	65	45	VB..1604..	843-062071	811-301157	811-246021

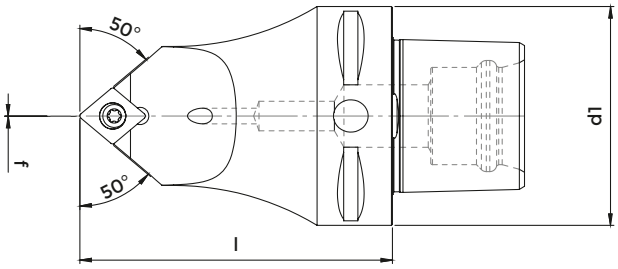

SCMC

COD.	DESCRIPTION	POLYGONAL	d1	l	f	INSERT	SUPPORT PAD	BUSH	SCREW
C63SCMCN0009012	UTENSILE C63-SCMCN12	C63	63	90	0	CC..1204..	843-022051	811-301156	811-266006

ISO 26623-1 POLYGONAL EXTERNAL TURNING TOOLS

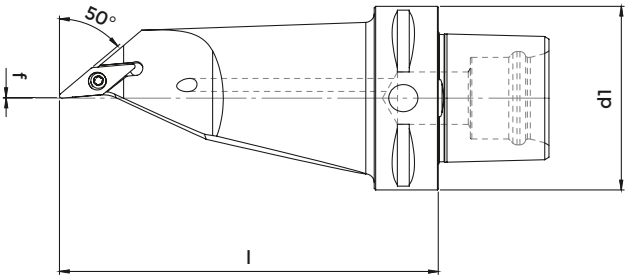

SVMB

COD.	DESCRIPTION	POLYGONAL	d1	l	f	INSERT	SUPPORT PAD	BUSH	SCREW
C63SVMBL0013016	UTENSILE C63-SVMBL16	C63	63	130	0	VB..1604..	843-062071	811-301157	811-246021

ISO 26623-1 POLYGONAL EXTERNAL THREADING TOOLS

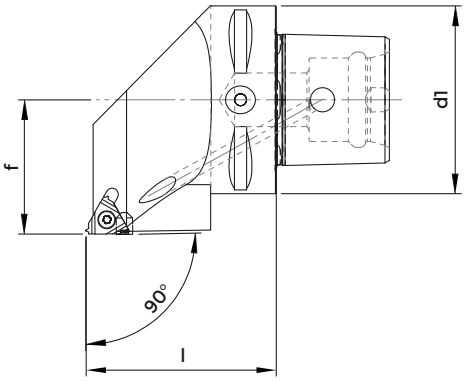

THE

COD.	DESCRIPTION	POLYGONAL	d1	l	f	INSERT	SUPPORT PAD	SCREW	SCREW
C40THEL2705016	UTENSILE C40-SEL16	C40	40	50	27	16EL...	843-092271	811-207002	811-207001
C40THER2705016	UTENSILE C40-SER16	C40	40	50	27	16ER...	843-092261	811-207002	811-207001
C50THEL3506016	UTENSILE C50-SEL16	C50	50	60	35	16EL...	843-092271	811-207002	811-207001
C50THER3506016	UTENSILE C50-SER16	C50	50	60	35	16ER...	843-092261	811-207002	811-207001
C63THEL4506516	UTENSILE C63-SEL16	C63	63	65	45	16EL...	843-092271	811-207002	811-207001
C63THER4506516	UTENSILE C63-SER16	C63	63	65	45	16ER...	843-092261	811-207002	811-207001

ISO 26623-1 POLYGONAL INTERNAL TURNING TOOLS

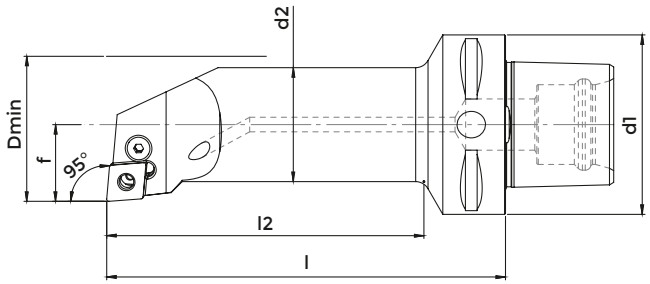

PCLN

COD.	DESCRIPTION	POLYGONAL	d1	d2	l	l2	f	Dmin	INSERT	LEVER	SCREW	SUPPORT PAD	SPRING
C40PCLNL2211012	UTENSILE C40-PCLNL12	C40	40	32	110	87	22	39	CN..1204..	831-001540	811-301153	843-022061	815-321400
C40PCLNR2211012	UTENSILE C40-PCLNR12	C40	40	32	110	87	22	39	CN..1204..	831-001540	811-301153	843-022061	815-321400
C50PCLNL2211012	UTENSILE C50-PCLNL12	C50	50	32	110	87	22	39	CN..1204..	831-001540	811-301153	843-022061	815-321400
C50PCLNR2211012	UTENSILE C50-PCLNR12	C50	50	32	110	87	22	39	CN..1204..	831-001540	811-301153	843-022061	815-321400
C63PCLNL2714012	UTENSILE C63-PCLNL12	C63	63	40	140	111	27	48	CN..1204..	831-001540	811-301153	843-022061	815-321400
C63PCLNR2714012	UTENSILE C63-PCLNR12	C63	63	40	140	111	27	48	CN..1204..	831-001540	811-301153	843-022061	815-321400

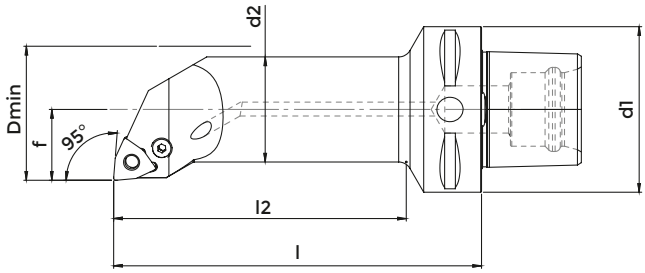

PWLN

COD.	DESCRIPTION	POLYGONAL	d1	d2	l	l2	f	Dmin	INSERT	LEVER	SCREW	SUPPORT PAD	SPRING
C40PWLNL2211008	UTENSILE C40-PWLNL08	C40	40	32	110	87	22	39	WN..0804..	831-001540	811-301153	843-081131	815-321400
C40PWLNR2211008	UTENSILE C40-PWLNR08	C40	40	32	110	87	22	39	WN..0804..	831-001540	811-301153	843-081131	815-321400
C50PWLNL2211008	UTENSILE C50-PWLNL08	C50	50	32	110	87	22	39	WN..0804..	831-001540	811-301153	843-081131	815-321400
C50PWLNR2211008	UTENSILE C50-PWLNR08	C50	50	32	110	87	22	39	WN..0804..	831-001540	811-301153	843-081131	815-321400
C63PWLNL2714008	UTENSILE C63-PWLNL08	C63	63	40	140	111	27	48	WN..0804..	831-001540	811-301153	843-081131	815-321400
C63PWLNR2714008	UTENSILE C63-PWLNR08	C63	63	40	140	111	27	48	WN..0804..	831-001540	811-301153	843-081131	815-321400

ISO 26623-1 POLYGONAL INTERNAL TURNING TOOLS

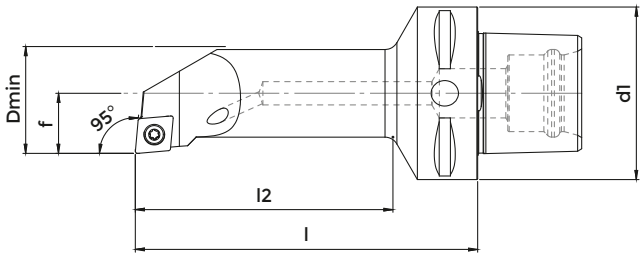

SCLC

COD.	DESCRIPTION	POLYGONAL	d1	d2	l	l2	f	Dmin	INSERT	SUPPORT PAD	BUSH	SCREW
C40SCLCL1107009	UTENSILE C40-SCLCL09	C40	40	16	70	47	11	20	CC..09T3..	-	-	811-256031
C40SCLCR1107009	UTENSILE C40-SCLCR09	C40	40	16	70	47	11	20	CC..09T3..	-	-	811-256031
C40SCLCL1308009	UTENSILE C40-SCLCL09	C40	40	20	80	58	13	25	CC..09T3..	-	-	811-256031
C40SCLCR1308009	UTENSILE C40-SCLCR09	C40	40	20	80	58	13	25	CC..09T3..	-	-	811-256031
C40SCLCL1709012	UTENSILE C40-SCLCL12	C40	40	25	90	68	17	30	CC..1204..	-	-	811-266005
C40SCLCR1709012	UTENSILE C40-SCLCR12	C40	40	25	90	68	17	30	CC..1204..	-	-	811-266005
C40SCLCL2211012	UTENSILE C40-SCLCL12	C40	40	32	110	87	22	39	CC..1204..	843-022051	811-301156	811-266006
C40SCLCR2211012	UTENSILE C40-SCLCR12	C40	40	32	110	87	22	39	CC..1204..	843-022051	811-301156	811-266006
C50SCLCL1709012	UTENSILE C50-SCLCL12	C50	50	25	90	68	17	30	CC..1204..	-	-	811-266005
C50SCLCR1709012	UTENSILE C50-SCLCR12	C50	50	25	90	68	17	30	CC..1204..	-	-	811-266005
C50SCLCL2211012	UTENSILE C50-SCLCL12	C50	50	32	110	87	22	39	CC..1204..	843-022051	811-301156	811-266006
C50SCLCR2211012	UTENSILE C50-SCLCR12	C50	50	32	110	87	22	39	CC..1204..	843-022051	811-301156	811-266006
C63SCLCL2212512	UTENSILE C63-SCLCL12	C63	63	32	125	102	22	39	CC..1204..	843-022051	811-301156	811-266006
C63SCLCR2212512	UTENSILE C63-SCLCR12	C63	63	32	125	102	22	39	CC..1204..	843-022051	811-301156	811-266006
C63SCLCL2216012	UTENSILE C63-SCLCL12	C63	63	32	160	132	22	39	CC..1204..	843-022051	811-301156	811-266006
C63SCLCR2216012	UTENSILE C63-SCLCR12	C63	63	32	160	132	22	39	CC..1204..	843-022051	811-301156	811-266006
C63SCLCL2714012	UTENSILE C63-SCLCL12	C63	63	40	140	111	27	48	CC..1204..	843-022051	811-301156	811-266006
C63SCLCR2714012	UTENSILE C63-SCLCR12	C63	63	40	140	111	27	48	CC..1204..	843-022051	811-301156	811-266006
C63SCLCL2718012	UTENSILE C63-SCLCL12	C63	63	40	180	151	27	48	CC..1204..	843-022051	811-301156	811-266006
C63SCLCR2718012	UTENSILE C63-SCLCR12	C63	63	40	180	151	27	48	CC..1204..	843-022051	811-301156	811-266006

ISO 26623-1 POLYGONAL INTERNAL TURNING TOOLS

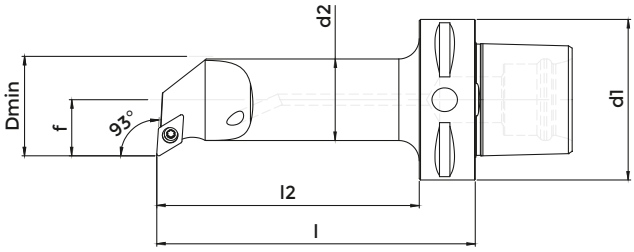

SDUC

COD.	DESCRIPTION	POLYGONAL	d1	d2	l	l2	f	Dmin	INSERT	SUPPORT PAD	BUSH	SCREW
C40SDUCL1107007	UTENSILE C40-SDUCL07	C40	40	16	70	47	11	20	DC..0702..	-	-	811-226020
C40SDUCR1107007	UTENSILE C40-SDUCR07	C40	40	16	70	47	11	20	DC..0702..	-	-	811-226020
C40SDUCL1308011	UTENSILE C40-SDUCL11	C40	40	20	80	58	13	25	DC..11T3..	-	-	811-256031
C40SDUCR1308011	UTENSILE C40-SDUCR11	C40	40	20	80	58	13	25	DC..11T3..	-	-	811-256031
C40SDUCL1709011	UTENSILE C40-SDUCL11	C40	40	25	90	68	17	30	DC..11T3..	-	-	811-256032
C40SDUCR1709011	UTENSILE C40-SDUCR11	C40	40	25	90	68	17	30	DC..11T3..	-	-	811-256032
C40SDUCL2211011	UTENSILE C40-SDUCL11	C40	40	32	110	87	22	39	DC..11T3..	843-032031	811-301157	811-246021
C40SDUCR2211011	UTENSILE C40-SDUCR11	C40	40	32	110	87	22	39	DC..11T3..	843-032031	811-301157	811-246021
C50SDUCL1709011	UTENSILE C50-SDUCL11	C50	50	25	90	68	17	30	DC..11T3..	-	-	811-256032
C50SDUCR1709011	UTENSILE C50-SDUCR11	C50	50	25	90	68	17	30	DC..11T3..	-	-	811-256032
C50SDUCL2211011	UTENSILE C50-SDUCL11	C50	50	32	110	110	22	87	DC..11T3..	843-032031	811-301157	811-246021
C50SDUCR2211011	UTENSILE C50-SDUCR11	C50	50	32	110	110	22	87	DC..11T3..	843-032031	811-301157	811-246021
C63SDUCL2212511	UTENSILE C63-SDUCL11	C63	63	32	125	102	22	39	DC..11T3..	843-032031	811-301157	811-246021
C63SDUCR2212511	UTENSILE C63-SDUCR11	C63	63	32	125	102	22	39	DC..11T3..	843-032031	811-301157	811-246021
C63SDUCL2216011	UTENSILE C63-SDUCL11	C63	63	32	160	132	22	39	DC..11T3..	843-032031	811-301157	811-246021
C63SDUCR2216011	UTENSILE C63-SDUCR11	C63	63	32	160	132	22	39	DC..11T3..	843-032031	811-301157	811-246021
C63SDUCL2714011	UTENSILE C63-SDUCL11	C63	63	40	140	111	27	48	DC..11T3..	843-032031	811-301157	811-246021
C63SDUCR2714011	UTENSILE C63-SDUCR11	C63	63	40	140	111	27	48	DC..11T3..	843-032031	811-301157	811-246021
C63SDUCL2718011	UTENSILE C63-SDUCL11	C63	63	40	180	151	27	48	DC..11T3..	843-032031	811-301157	811-246021
C63SDUCR2718011	UTENSILE C63-SDUCR11	C63	63	40	180	151	27	48	DC..11T3..	843-032031	811-301157	811-246021

ISO 26623-1 POLYGONAL INTERNAL TURNING TOOLS

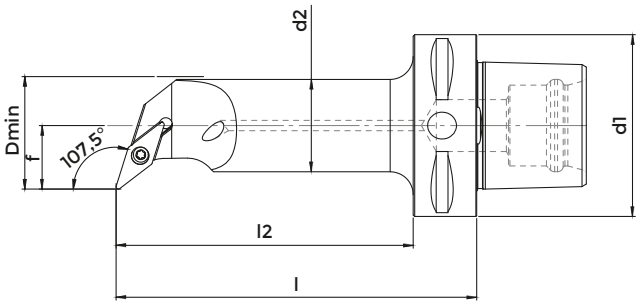

SVQB

COD.	DESCRIPTION	POLYGONAL	d1	d2	l	l2	f	Dmin	INSERT	SUPPORT PAD	BUSH	SCREW
C50SVQBL1709016	UTENSILE C50-SVQBL16	C50	50	25	90	65	17	30	VB..1604..	-	-	811-246020
C50SVQBR1709016	UTENSILE C50-SVQBR16	C50	50	25	90	65	17	30	VB..1604..	-	-	811-246020
C63SVQBL2212516	UTENSILE C63-SVQBL16	C63	63	32	125	95	22	39	VB..1604..	843-062071	811-301157	811-246021
C63SVQBR2212516	UTENSILE C63-SVQBR16	C63	63	32	125	95	22	39	VB..1604..	843-062071	811-301157	811-246021
C63SVQBL2718016	UTENSILE C63-SVQBL16	C63	63	40	180	150	27	48	VB..1604..	843-062071	811-301157	811-246021
C63SVQBR2718016	UTENSILE C63-SVQBR16	C63	63	40	180	150	27	48	VB..1604..	843-062071	811-301157	811-246021

ISO 26623-1 POLYGONAL INTERNAL THREADING TOOLS

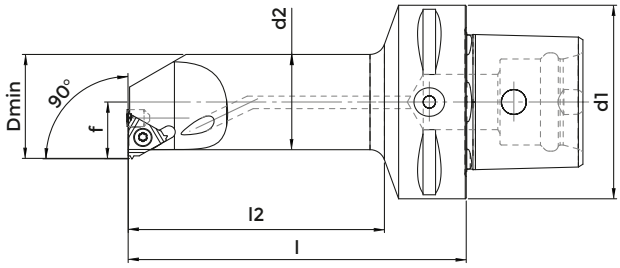

THE

COD.	DESCRIPTION	POLYGONAL	d1	d2	l	l2	f	Dmin	INSERT	SUPPORT PAD	SCREW	SCREW
C40THEL1709016	UTENSILE C40-ANL16	C40	40	25	90	65	17	32	16IL...	843-092261	811-207002	811-207001
C40THER1709016	UTENSILE C40-ANR16	C40	40	25	90	65	17	32	16IR...	843-092271	811-207002	811-207001
C50THEL1709016	UTENSILE C50-ANL16	C50	50	25	90	65	17	32	16IL...	843-092261	811-207002	811-207001
C50THER1709016	UTENSILE C50-ANR16	C50	50	25	90	65	17	32	16IR...	843-092271	811-207002	811-207001
C63THEL2011016	UTENSILE C63-ANL16	C63	63	31	110	78	20	39	16IL...	843-092261	811-207002	811-207001
C63THER2011016	UTENSILE C63-ANR16	C63	63	31	110	78	20	39	16IR...	843-092271	811-207002	811-207001

READY, ALWAYS.

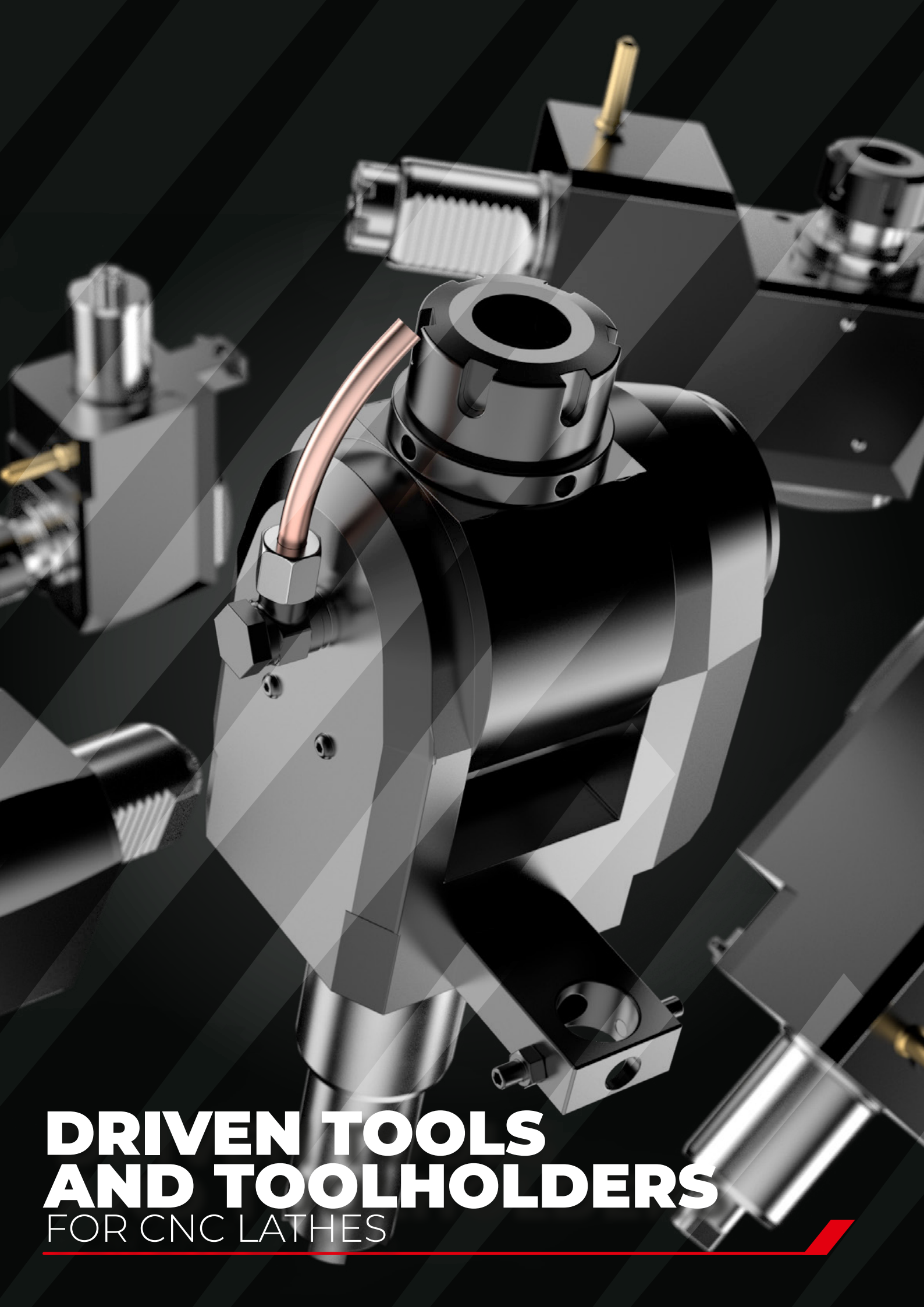

DRIVEN TOOLS AND TOOLHOLDERS
FOR CNC LATHES

Driven tools for CNC lathes

ACCUWAY

Model:
- UT-100 M (DISC) p.316
- UT-100 Y (BMT) p.354
- UT-200 Y/SY (BMT) p.342
- UT-200 Y/SY (BMT) p.344
- UT-2000 T2M (BMT) p.342
- UT-2000 T2M (BMT) p.344
- UT-300 M/SM (BMT) • UT-300 Y (BMT) p.354
- UT-300/300L (DISC) p.325
- UT-360/380 M (BMT) p.354
- UZ-2000 (BMT) p.342
- UZ-2000 (BMT) p.344
- UZ-2000 T2Y (BMT) p.354

AEGIS

Model:
- FTC-23 BM/LM/LMY • FTC-30 BM/BMY/LM/LMY
- FTC-26 BM/BMY/LM/LMY p.354

AKIRA SEIKI

Model:
- SL 25-MC (DISC) p.316

ALEX-TECH

Model:
- VT 21/23MS (STAR) p.316
- VT-27G, 30-33BLMC (BMT55) p.354
- VT28-28BL (DISC) p.322

ANGELINI

Model:
- BRAVO (DISC) • DG13 CNC (DISC) p.319
- EXCELL SLT630 (DISC) p.325
- SNUPY SAUTERREVOLER (DISC) p.319
- ZENIT (STAR) p.316

AVEREX

Model:
- MTX1-76 SY1, MTX2-76 SY2 p.352

AVIA

Model:
- 30 M (STAR) • 50 M/MS (STAR)
- 35 M/MS (STAR) p.322
- AVIATURN 63M (DISC) p.319

BARUFFALDI

Model:
- VDI30 TOEM (DISC) • VDI40 TOEM (DISC)
- VDI30 TOEM (STAR) • VDI50 TOEM (DISC) p.322

BATLIBOI

Model:
- SPRINT 25TC (DISC) p.322

BIGLIA

Model:
- B111 VDI40 (DISC) p.322
- B1200 • B1250 16ST
- B1200Y p.315
- B200 VDI40 (DISC) p.322
- B301 • B470
- B445 • B501
- B446 • B545
- B465 p.315
- B56 VDI40 (DISC) p.322
- B565 • B765
- B620 • BV210
- B650 • BV315
- B658 • QUATTRO B445
- B745 • QUATTRO B470
- B750 16ST p.315

BOEHRINGER

Model:
- DUS 560 (DISC) p.319
- NG180 (STAR) • NV250 RIGHT (STAR, VERTICAL)
- NG200 (STAR)
- NV250 LEFT (STAR, VERTICAL) • VDF 300T (STAR) p.316

CACTA

Model:
- CAT500 (DISC) p.322

CAMPRO

Model:
- CPL20MC (DISC) p.319

CHEVALIER

Model:
- FBL-300 p.354
- FCL-1028MC (DISC) p.322

CHIAH CHYUN

Model:
- CT1/2/3-52/65 YM/Y2M(S) p.352
- ML-250 • WTS-52/65 Y2M p.354

CHING HUNG

Model:
- CL260 (DISC) • CL38 (DISC) p.322

CINCINNATI

Model:
- HTC200 (DISC) • HTC250 (DISC) p.322

CMZ

Model:
- TA 15-30, TD 15-55 M/MS/Y/YS (15 ST) • TA Z400, 640, 1100 (15 ST) p.350
- TBI 520 (DISC) • TL 20M (VDI40) (DISC) p.325
- TTL 52/66 • TX 52/66 p.350

CNC TAKANG

Model:
- TNC-2000DST (DISC) • TNC-30N (DISC) p.322

COLCHESTER

Model:
- T10M (DISC) p.316
- T6M (DISC) p.319
- T6MS (STAR) p.316
- T8M (DISC) p.319
- T8M SAUTER (DISC) • T8MSY VDI30 (STAR)
- T8MS (STAR) p.316
- TORNADO 120M (DISC) • TSL500 (DISC)
- TORNADO 220M (DISC) p.319

Driven tools for CNC lathes

CONTUR

Model:
- HSL700 (DISC)
- TSL500 (DISC)

p.319

DAEWOO

Model:
- PUMA 200 MS (DISC)
- PUMA 250 MS (DISC)
- PUMA 350 M (DISC)
- PUMA 400 M (DISC)

p.322

DMC

Model:
- DL 21-22 M/LMS
- DL 25 MS/Y/SY/LSY
- DL 35-40 M
- DL 45-55 M
- DL 6TM

p.354

- I160TM (DISC)

p.322

DMG MORI / GILDEMEISTER

Model:
- CLX 350 V1/V3/V4 (STAR)
- CLX 350 V6 (STAR)

p.316

- CLX 450 BMT

p.342

- CLX 450 BMT

p.344

- CLX 450 V1/V3/V4 (STAR)
- CLX 450 V6 (STAR)
- CLX 550 V1/V3/V4 (STAR)
- CLX 550 V6 (STAR)

p.316

- CLX 750 V1/V3/V4 (DISC)

p.319

- CLX 750 V6 (STAR)
- CTV 160 RIGHT (STAR)
- CTV 160 RIGHT (STAR, VERTICAL)
- CTV 160 RIGHT VDI40 (STAR)
- CTV 200 LEFT (STAR, VERTICAL)
- CTV 200 RIGHT (STAR, VERTICAL)
- CTV 250 LEFT (STAR, VERTICAL)
- CTV 250 RIGHT (STAR, VERTICAL)
- CTV 315 RIGHT VDI40 (STAR)
- CTV 400 LINEAR (STAR)
- CTX 210 (DISC)
- CTX 210 (STAR)
- CTX 2500 VDI40 (DISC)
- CTX 2500/700 (STAR)
- CTX 300 (STAR)
- CTX 310 (DISC)
- CTX 310 (STAR)

p.316

- CTX 310 5482 OLD (DISC)

p.319

- CTX 310 BMT

p.342

- CTX 310 BMT

p.344

- CTX 310 ECO 5482 (DISC)

p.319

- CTX 310 ECO DIN5480 (DISC)
- CTX 320 SCHAFT 30 (DISC)
- CTX 320 SCHAFT 30 (STAR)
- CTX 320 SCHAFT 40 (DISC)
- CTX 320 SCHAFT 40 (STAR)
- CTX 320 V1-V3 (DISC)
- CTX 320 V4-V6 (DISC)

p.316

- CTX 400 SCHAFT 40 (DISC)
- CTX 400 SERIE 2 (DISC)

p.319

- CTX 400E SCHAFT 30 V5 (STAR)
- CTX 400E SCHAFT 40 V5 (STAR)

p.316

- CTX 400E V1-V3 (DISC)

p.319

- CTX 410 SCHAFT 30 (DISC)
- CTX 410 SCHAFT 30 (STAR)
- CTX 410 SCHAFT 40 (DISC)
- CTX 420 LINEAR (DISC)
- CTX 420 LINEAR (STAR)
- CTX 420 SCHAFT 30 (STAR)
- CTX 450 ECO (DISC)

p.316

- CTX 500 (DISC)

p.319

- CTX 500 TWIN (STAR)
- CTX 510 (DISC)
- CTX 510 ECO 5480 (DISC)

p.316

- CTX 510 ECO 5482 (DISC)

p.319

- CTX 520 LINEAR (DISC)

p.316

- CTX 600 (DISC)

p.319

- CTX 600 LINEAR (DISC)

p.316

- CTX 600 SCHAFT 40 (DISC)

p.319

- CTX 620 LINEAR (DISC)
- CTX ALPHA 300 (DISC)
- CTX ALPHA 500 (DISC)
- CTX ALPHA 500 (STAR)
- CTX ALPHA 500 V6 VDI30 (STAR)
- CTX BETA 1250 4A (STAR)
- CTX BETA 1250 TC 4A (STAR)
- CTX BETA 1250 VDI30 (DISC)
- CTX BETA 1250 VDI30 (STAR)
- CTX BETA 1250 VDI40 (DISC)
- CTX BETA 1250 VDI40 (STAR)
- CTX BETA 2000 VDI50 (DISC)
- CTX BETA 500 VDI30 (DISC)
- CTX BETA 500 VDI30 (STAR)
- CTX BETA 500 VDI40 (DISC)
- CTX BETA 800 4A (STAR)
- CTX BETA 800 VDI30 (DISC)
- CTX BETA 800 VDI30 (STAR)
- CTX BETA 800 VDI40 (DISC)
- CTX BETA 800 VDI40 (STAR)
- CTX GAMMA 1250 VDI40 (STAR)
- CTX GAMMA 1250 VDI50 (DISC)
- CTX GAMMA 1250 VDI50 (STAR)
- CTX GAMMA 2000 VDI40 (STAR)
- CTX GAMMA 2000 VDI50 (DISC)
- CTX TWIN (STAR)
- ECOTURN 310 (DISC)
- ECOTURN 450 (DISC)
- ECOTURN 510 (DISC)
- ECOTURN 650 (DISC)
- GM 70 5480 (STAR)
- GMX 200 (STAR)
- GMX 250 (STAR)
- GMX 300 (STAR)
- GMX 400 (STAR)
- GMX 500 (STAR)

p.316

- GT 700 (DISC)
- MD5IT (DISC)

p.319

- NEF 400 (DISC)
- NEF 600 (DISC)
- NLX 2500 SY VDI40 (STAR)
- NLX 2500/700 VDI40 (STAR)
- SPRINT 65 (STAR)
- TWIN 102 SCHAFT 30 (STAR)
- TWIN 102 SCHAFT 40 (STAR)
- TWIN 42 (STAR)
- TWIN 500 (STAR)
- TWIN 65 SCHAFT 30 (STAR)
- TWIN 65 SCHAFT 40 (STAR)

p.316

DMTG INGERSOLL

Model:
- I40 (DISC)

p.319

DOOSAN

Model:
- INVERTURN 3000 M
- LYNX 2100 MA
- LYNX 220 LMSA /LMSC
- LYNX 220 LSYA /LSYC
- LYNX 220 M / LM
- LYNX 220 MA/LMA/MC/LMC
- LYNX 220 YA/YC/LYA/LYC
- LYNX 2600 Y/SY
- LYNX 300 M
- PUMA 1500 / 2000 / 2500 M / S / Y
- PUMA 2100 Y/LY/SY/LSY
- PUMA 2100/2600 M/LM/MS/LMS
- PUMA 2100/2600 Y/LY/SY/LSY
- PUMA 2100/2600/3100 M/Y/MS/SY
- PUMA 230/240/280 M/LM/S
- PUMA 4100 M/LM
- PUMA 480 M/LM/XLM
- PUMA 500 M
- PUMA 5100 M/LM
- PUMA GT 2100/2600 M/MB
- PUMA GT 3100 M /LM
- PUMA H250 T M
- PUMA MX 1600 T/ST
- PUMA MX 1600 T/ST (BMT55)
- PUMA MX 2000/2500
- PUMA MX 2100 T/ST
- PUMA MX 2600 T/ST
- PUMA QL 200 H M
- PUMA TL 2000/2500 M/LM
- PUMA TT 1300 SY/SYY
- PUMA TT 1500/1800 MS/SY
- PUMA TT 2000/2500 M/S/Y

Driven tools for CNC lathes

	• PUMA 300 M/MS/MB/MC • PUMA 3100 M/LM/LY/XLM/XLY/ULM/ULY • PUMA 400 MA/LMA/MB/LMB/MC/LMC/XLMA/XLMB/XLMC	• PUMA TT 2100 SYY • PUMA V400 M • PUMA V550 M • PUMA V8300 M • PUMA VT450 M / M-2SP • PUMA VT750 M / M-2SP	p.354
	• S240LM (STAR) • S280M SCHAFT 30 (STAR)	• S310M (STAR) • S310NM (STAR)	p.316
	• S390LM (DISC)		p.319
	• S390LM (STAR)	• S550LM (STAR)	p.316
	• SMX 2660ST • SMX2100 ST	• TW 2100 M • TW 2600 M	p.354
	• Z290 (STAR)		p.316
DUGARD			
	• 52 TTSY	• 65 TTSY	p.354
DUPLOMATIC			
Model:	• VDI30 5480 (DISC)	• VDI30 5480 (STAR)	p.316
	• VDI40 1809 (DISC)		p.322
	• VDI40 5480 (DISC)	• VDI40 5480 (STAR)	p.316
	• VDI50 1809 (DISC)		p.322
	• VDI50 5480 (DISC)		p.316
ECOCA			
Model:	• MT-3 MC/MCSY		p.354
	• MT-308MC (DISC) • MT-308MCS (DISC)	• MT-310MC (DISC) • MT-312MC (DISC)	p.325
	• MT-4 MC/MCSY		p.354
	• MT-415MC (DISC)		p.325
EDEL			
Model:	• SL35 (DISC)		p.325
EMCO			
Model:	• 345 NEW (DISC) • 365 NEW (STAR) • 365 OLD (STAR) • 465 NEW (STAR) • 465 OLD (STAR) • CONCEPT TURN 450/460 (DISC)	• E45 (DISC) • E65 (DISC) • EMCOTURN 345/II DIN5480 (DISC)	p.316
	• ET500 (DISC)		p.322
	• ET500 (STAR)		p.316
	• ET700 (DISC)	• ET800 (DISC)	p.322
	• HYPERTURN 45		p.354
	• HYPERTURN 645 (STAR) • HYPERTURN 665 (STAR)	• HYPERTURN 690 (STAR) • MAXX TURN 110 (DISC)	p.316
	• MAXX TURN 110 (DISC)		p.322
	• MAXX TURN 65 (STAR) • MAXX TURN 95 (DISC)	• VT 250/260/400 (STAR, VERTICAL)	p.316
EUROTECH			
Model:	• 730SLY • 830SLY • B1250 16ST • B446	• B465 • B620 • B750 16ST • E42SL	p.315
	• TA 15-30, TD 15-55 M/MS/Y/YS (15 ST) • TTL 52/66		p.350
FAC			
Model:	• FCT700 (DISC)		p.316
FADAL			
Model:	• PTC250 (DISC)		p.322
FAIR FRIEND			
Model:	• FTC-20 (DISC)	• FTC-30 (DISC)	p.322
	• FTC-35-2S (STAR)		p.316
FAMAR			
Model:	• PRONTO 6 (STAR)		p.316
FAT			
Model:	• TUR 560/630/630 A MN (DISC)		p.319
FMS			
Model:	• NDM 20 (STAR)	• NDM 40 (STAR)	p.316
FOCUS CNC			
Model:	• FBL 230MC • FBL 300MC	• FBL-420Y • FBL-460MC	p.354
	• FCL 300MC (DISC)		p.322
	• FNL 220 Y/LY/LSY 16ST • FNL/FBL-250SY (16ST, BMT55)		p.354
	• FNL/FBL-250Y/SY (12ST, BMT60)		p.346
	• FNL-160, 220LSY		p.354
FORCE ONE			
Model:	• FCL-450TM/S, 550TM/S, 580TM (STAR, VERTICAL) • FCL-580TMS (STAR)		p.316
FORTUNE			
Model:	• VTURN II 26 (DISC)	• VTURN II 26 (STAR)	p.316
GANESH			
Model:	• ASL-100 M (VDI30) (STAR)		p.316
	• ASL-100 MY (BMT55) • ASL-15 MY (BMT65)	• ASL-78/105 TTMY (BMT65)	p.354
	• ASL-8/10/78 M(S)Y, ASL-52 TTMY (BMT40)		p.342
	• ASL-8/10/78 M(S)Y, ASL-52 TTMY (BMT40)		p.344
	• GENTURN 52/65 MSY		p.354
	• GENTURN 52/78 TTMY, 78 MSY		p.352
	• GENTURN WTS-Y2M		p.354
GEDEE WEILER			
Model:	• UNITURN 300, 400 (STAR)		p.316
GITAL			
Model:	• GMC70 (STAR)		p.316
GOODWAY			
Model:	• GLS-2800 M/MS/SY/Y • GLS-3000 M/MS/SY/Y	• GLS-3300 M/MS/SY/Y	p.354

Driven tools for CNC lathes

GRAZIANO

Model:	• CTX 320 V4-V6 (STAR) • CTX 500 (STAR)	• CTX 620 (DISC)	p.316
	• CTX 700 (DISC)	• GR350C (DISC)	p.319
	• GT300 (STAR)		p.316
	• GT400 (DISC)		p.319
	• TWIN 50 (STAR)		p.316

HAAS

Model:	• DF-20/30 Y HYBRID VB12 (DISC) • DS-20/30 SS/SSY-HYBRID VB24 (DISC) • DS-20/30 Y-HYBRID VB12 (DISC)		p.328
	• DS-30Y BMT65		p.354
	• SL-20 HYBRID VB12 (DISC) • SL-30 HYBRID VB12 (DISC)	• SL-40 (DISC)	p.328
	• ST-10Y BMT45	• ST-20/25/30/35 Y BMT65	p.354
	• ST-20/30 SS/SSY-HYBRID VB24 (DISC) • ST-20/30 Y HYBRID VB12 (DISC)		p.328
	• ST-20Y BMT65 • ST-25Y BMT65	• ST-30Y BMT65 • ST-35Y BMT65	p.354
	• ST-40 (DISC) • TL-15 (DISC)	• TL-25 (DISC)	p.328

HACO

Model:	• FCT700 (DISC)	p.354

HARDINGE

Model:	• BMT45 • BMT55	• ELITE 65 M ULTRA	p.354
	• ELITE 8/51 (STAR) • ELITE 8/52 (STAR) • GS150M VDI30 (DISC) • GS150M VDI30 (STAR) • GS200M VDI30 (DISC)	• GS200M VDI30 (STAR) • GS200M VDI40 (DISC) • GS200MSY (STAR) • GS250M VDI40 (DISC)	p.316
	• H-51 (BMT55) • H-51, TT-42/51 (BMT45-16T)	• T-42/51 (BMT45) • T-51, 65 (BMT55)	p.354
	• TALENT 10/78 (DISC)		p.322
	• TALENT 6/45 + 8/52 (DISC) • TALENT 8/66 + 10/78 (STAR) • TALENT VDI30 NEW (DISC)		p.316
	• TALENT VDI30 OLD (DISC)		p.319

HASEGAWA

Model:	• C25/42	p.348

HEADMAN

Model:	• HI5000M • HI6000M • T55 M/MS • T65 M/MS	• T75 M • VI7000M (RIGHT TURRET) • VZ7000M/AM	p.354

HESSAPP

Model:	• BLUETURN250 LEFT (STAR, VERTICAL) • BLUETURN250 RIGHT (STAR, VERTICAL) • DVH450 LEFT (STAR, VERTICAL) • DVH450 RIGHT (STAR, VERTICAL) • DVT630 5482 (STAR)	p.316

HEYLIGENSTAEDT

Model:	• HEYNUMAT 15 (DISC)	• HEYNUMAT 5 (DISC)	p.319

HITACHI SEIKI

Model:	• CS20/CS25 (DISC) • HICELL 23S (DISC) • HT 200/250 (DISC)	• HT 20S (DISC) • HT 23R (DISC) • HT 25G (DISC)	p.322

HURCO

Model:	• TMM10 (STAR) • TMM10I (STAR)	• TMM12I (STAR)	p.322
	• TMM8 (STAR)		p.316
	• TMX10 MY/MYS 1809 (STAR)		p.322
	• TMX10 MY/MYS 5480 (STAR)		p.316
	• TMX8 / TMX10 MY/MYS (BMT65)		p.354
	• TMX8 MY/MYS 1809 (STAR)		p.322
	• TMX8 MY/MYS 5480 (STAR)		p.316

HWACHEON

Model:	• CUTEX 160/180 (BMT55) • CUTEX 180 (16 ST) (BMT45) • CUTEX 240 (BMT65) • HI-TECH 200 MC (BMT65) • HI-TECH 230 (20 ST) (BMT45) • HI-TECH 230 (BMT65) • HI-TECH 300 (BMT65) • HI-TECH 350 (BMT65)	• HI-TECH 400 MC (BMT65) • HI-TECH 450 (BMT65) • HI-TECH 550/700/7026 (BMT75) • T2 (BMT65) • VT-450 (BMT55) • VT-450 (BMT65) • VT-550 (BMT75) • VT-650 (BMT75)	p.354

HYUNDAI

Model:	• 400 MC	p.354
	• HIT 160M (DISC)	p.322
	• SKT 200/250 TTSY	p.354

HYUNDAI WIA

Model:	• E200 MA (DISC)		p.322
	• FT 250-2SP • HD 2200 M/MC	• HD 2600 M • HD 3100 M/LM	p.354
	• HIT 20M/200M/250M (DISC)		p.322
	• L 150, 210 LMA/LMSA (DISC)		p.319
	• L 160/230 MA/MC/LMA/LMSA		p.354
	• L 200, 250Y/SY (STAR)		p.316
	• L 2000 Y/LY/SY/LSY • L 2100 SY • L 2600 Y/LY/SY • L 300 MA/MC/LMA/LMC/MSA/LMSA/MSC • L 3000 Y/LY/SY • L 3000 Y/LY/SY/LSY • L 400/500 MA/MC/LMC	• LF 1600/2100/2600 M/2SP • LM 1600/1800 TTMS/TTSY • LM 2000/2500 TTM/TTMS/TTSY • LV 450 RM/LM • LV 500/800/850 RM/LM • SE 2200 MA • SK- V80 M	p.354
	• SKT 15, 21LM (DISC)		p.319
	• SKT 160/180 TTSY		p.354
	• SKT 200, 250Y/SY (STAR)		p.316
	• SKT 200/250 TTSY • SKT 250/300 MS/LMS	• SKT 400 LMC	p.354

Driven tools for CNC lathes

INDEX

Model:
- B400 VDI30 (STAR)
- G220 VDI30 (STAR)
- G250 VDI30 (STAR)
- G250 VDI40 (STAR)
- G300 VDI30 (STAR)
- V160 VDI30 (STAR)
- V250 VDI30 (STAR)
- V300 VDI30 (STAR)

p.358

JOHNFORD

Model:
- HT / ST SERIES — p.354
- HT 40, 60, 80 (DISC)
- SL 20, 30, 35, 40 (DISC)
- SL 50, 60, 65 (DISC) — p.325
- SL 60, 65 (BMT65) — p.354
- SL 70, 80, 100, 120 (DISC)
- ST 100, 130, 160, 200, 240 A/B (DISC)
- ST 40, 60, 70, 80 (DISC) — p.325

JYOTI

Model:
- AX 200 (BMT45)
- AX 300 (BMT55)
- TMC 250, 350 (BMT45) — p.354
- TMC 350 (VDI40) (STAR)
- TMX 200 (VDI40) (STAR) — p.316

KERN

Model:
- CD402 VDI30 (DISC)
- CD402 VDI40 (DISC)
- CD650 (DISC)
- DMT VDI30 (DISC)
- DMT VDI40 (DISC)
- KDS300 (DISC) — p.319

KIA

Model:
- SKT 15 LM/LMS (DISC)
- SKT 21 LM/LMS (DISC) — p.319
- SKT 210 (STAR)
- SKT 210 SY (DISC) — p.316

KOVOSVIT MAS

Model:
- HI TURN 65-9X (STAR)
- KL 285 MC/Y (DISC) — p.316
- KL 435 (DISC)
- S50 VDI40 (DISC) — p.322
- SP 180 MC/Y (DISC)
- SP 280 MC/Y (DISC)
- SP 280 SMC/SY (STAR) — p.316
- SP 430 (DISC)
- SP 630 (DISC) — p.322

KUEN JENG

Model:
- KL-645 (DISC) — p.316

LEADWELL

Model:
- LTC 25 BLM (DISC) — p.322
- LTC 25IMY (BMT65) — p.354
- LTC8T25MY VDI30 (STAR)
- LTC8T25MY VDI40 (STAR) — p.316
- T7I M/SM (BMT55) — p.354
- T8 M (DISC) — p.322
- T85M (DISC)
- T85M (STAR) — p.316

LMW

Model:
- LL20MYL5 (BMT55) — p.354
- LL20TM/MYL5 (VDI30) (STAR) — p.316
- LR30TML7 — p.354

MAG

Model:
- VDF 300T (STAR) — p.316

MAGDEBURGER

Model:
- M120 (DISC) — p.322
- M300 (DISC)
- M400 SCHAFT50 (DISC)
- M500 (DISC) — p.319
- MV100 (DISC)
- MV160 (DISC) — p.316

MAHO GRAZIANO

Model:
- GR500 VDI50 (DISC)
- MT600 (DISC) — p.319

MAXSIN

Model:
- BMT65 — p.354

MAZAK

Model:
- MZ68B/C
- QT 100 M/MS/MY/MSY
- QT 200 M/MS/MY/MSY
- QT 250 M/MS/MY/MSY — p.341
- QT EZ 8/10/12 M/MSY/MY (BMT55) — p.354
- QT EZ 8-12 M/MY/MSY
- QTC 100 M/MS/MY/MSY
- QTC 200 M/MS/MY/MSY
- QTC 300 M/MS/MY/MSY
- QTC 350 M/MS/MY/MSY
- QTE 100 M/MS/MY/MSY
- QTE 200 M/MS/MY/MSY
- QTE 300 M/MS/MY/MSY
- QTE 350 M/MS/MY/MSY — p.341
- QTN 100 M/MS/MY/MSY (STAR) — p.338
- QTS 100 M/MS/MY/MSY
- QTS 150 M/MS/MY/MSY
- QTS 200 M/MS/MY/MSY
- QTS 250 M/MS/MY/MSY
- QTU 100 M/MS/MY/MSY
- QTU 200 M/MS/MY/MSY
- QTU 300 M/MS/MY/MSY
- QTU 350 M/MS/MY/MSY — p.341

MC MACHINERY

Model:
- LT1/2/3-52/76 YM/Y2M — p.352
- LT-400/520M (DISC) — p.316

MONARCH

Model:
- PREDATOR (DISC) — p.319

MONFORTS

Model:
- DNC3 (STAR)
- DNC5 (STAR)
- DNC500 (STAR)
- DUO TURN (STAR)
- MHC (STAR) — p.316
- RNC2 (DISC)
- RNC200 (DISC)
- RNC3 (DISC)
- RNC300 (DISC)
- RNC4 (DISC)
- RNC400 (DISC)
- RNC400 DUO TURN (STAR)
- RNC5 (DISC)
- RNC500 (DISC)
- RNC600 (DISC)
- RNC700 MNC 1000 (DISC) — p.319

MORI SEIKI

Model:
- ALX-1500 — p.342
- ALX-1500 — p.344
- ALX-2000 — p.342
- ALX-2000 — p.344
- ALX-2500 — p.342
- ALX-2500 — p.344
- DURA TURN 310ECO (DISC) — p.316
- DURATURN 2050 MC — p.342
- DURATURN 2050 MC — p.344

Driven tools for CNC lathes

- DURATURN 2550 MC p.342
- DURATURN 2550 MC p.344
- DURATURN 510ECO (DISC) p.316
- NL-1500 p.346
- NL-1500 20ST p.342
- NL-1500 20ST p.344
- NL-2000 p.346
- NL-2000 20ST p.342
- NL-2000 20ST p.344
- NL-2500 p.346
- NL-2500 20ST p.342
- NL-2500 20ST p.344
- NL-3000 • NLX-1500 p.346
- NLX-1500 20ST p.342
- NLX-1500 20ST p.344
- NLX-2000 p.346
- NLX-2000 20ST p.342
- NLX-2000 20ST p.344
- NLX-2500 p.346
- NLX-2500 20ST p.342
- NLX-2500 20ST p.344
- NLX-2500 SY VDI40 (STAR) p.316
- NLX-3000 • NLX-4000 p.346
- NRX-2000 MC p.342
- NRX-2000 MC p.344
- NT-3100/3200 p.342
- NT-3100/3200 p.344
- NT-3250 DCG / HSC • NT-4300
- NT-4200 • NT-5400
- NT-4250 p.346
- NTX-1000 p.342
- NTX-1000 p.344
- NTX-1500 p.342
- NTX-1500 p.344
- NTX-2000 p.342
- NTX-2000 p.344
- NTX-2500 p.342
- NTX-2500 p.344
- NZ-1500 p.342
- NZ-1500 p.344
- NZ-2000 p.342
- NZ-2000 p.344
- NZL-2500 p.346
- NZX-1500/800 p.342
- NZX-1500/800 p.344
- NZX-2000 20ST p.342
- NZX-2000 20ST p.344
- NZX-2500 p.346

MTRENT

Model:
- MTCUT T25/32 Y/SY p.346
- T36FMC p.354

MÜGA

Model:
- MÜGATURN T6 COMPACT (BMT55) • MÜGATURN T8 COMPACT (BMT55)
- MÜGATURN T6 COMPACT-Y (BMT55) • MÜGATURN T8 COMPACT-Y (BMT55) p.354

MURATEC

Model:
- MT 100 15ST p.348
- MT 100B p.350

NAKAMURA-TOME

Model:
- AS-200 • NTJ p.350
- NTJ100 p.348
- NTM3 p.350
- NTY3 • SC-100 p.348
- SC-150 M • SC-250 M
- SC-200 M p.350
- SC-300 M p.352
- SUPER NTJ p.350
- SUPER NTMX/NTMXL p.348
- SUPER NTX p.352
- SUPER NTY3 p.348
- TW-10 p.350
- TW-20 (12 ST) p.352
- TW-20 (16 ST) p.350
- TW-30 (16 ST) p.352
- WT-100 p.348
- WT-150 • WT-250
- WT-20-II M/MY p.350
- WT-300 p.352
- WTS-150 • WTW-150 p.350
- WY-100 p.348
- WY-250 p.350

NCT

Model:
- JCL 60 YTSM (STAR) p.316

NILES

Model:
- N30 (STAR) p.316
- N30 VDI50 (DISC) p.319

Driven tools for CNC lathes

OKUMA

Model:	• CAPTAIN L370 M/MW (DISC) • ES L10 II M (DISC) • ES L6 II-M (DISC) • ES L8 II-M (DISC)	• GENOS L200 E-M/MY V12M (DISC) • GENOS L2000 E-M (DISC) • GENOS L300 E-M/MY V12M (DISC)	p.335
	• GENOS L300 MW	• GENOS L3000 E-M	p.332
	• GENOS L3000 E-M (DISC) • LB 10-M (DISC)	• LB 10-MW (DISC) • LB 15 (DISC)	p.335
	• LB 2000 EX M		p.332
	• LB 2000-M (DISC) • LB 200-M (DISC)	• LB 200-MW (DISC) • LB 200-MY (DISC)	p.335
	• LB 2500 EX M		p.332
	• LB 300 MW (STAR)		p.335
	• LB 3000 EX M		p.332
	• LB 35 M (DISC)		p.335
	• LB 4000 EX M		p.334
	• LBR 370 (DISC) • LR 10 (DISC) • LT 10-M (STAR) • LT 15 (STAR)	• LT 200-M (STAR) • LT 300-M (STAR) • LU 15 (DISC)	p.335
	• LU 2000 EX M/MY		p.332
	• LU 2000-M (DISC)	• LU 200-M (DISC)	p.335
	• LU 2500 EX M/MY	• LU 3000 EX M/MY	p.332
	• LU 35 II M (DISC)		p.335
	• LU 4000 EX M		p.334
	• LVT 300 M (DISC) • MACTURN 250 (STAR)	• MACTURN 350 (STAR) • MACTURN 550 (STAR)	p.335

PITTLER

Model:	• PV 630 (STAR)		p.316

PROMAX

Model:	• E 450/450 L (DISC)		p.316

ROMI

Model:	• G30M 1809 (DISC)		p.322
	• G30M 5480 (DISC) • G30M 5480 (STAR) • G30M VDI40 (DISC) • G30M VDI40 (STAR)	• G30M VDI50 (DISC) • G50M (DISC) • GALAXY 30M (DISC) • GALAXY 50M (DISC)	p.316
	• GL250 S/Y		p.354
	• GL250M (DISC)	• GL280M (DISC)	p.322
	• GL300 S/Y		p.354
	• GL300M (DISC)		p.322
	• GL350 M/Y/S	• GL450 M/Y	p.354

SAEILO

Model:	• CONTUR HSL-700 (DISC)		p.319
	• CONTUR LT-20 MC (DISC)		p.322
	• CONTUR LT-400 MCMCY (STAR) • CONTUR TSL-300 (DISC)		p.316
	• CONTUR TSL-500 (DISC)		p.319

SAUTER

Model:	• VDI30 5480 (DISC)	• VDI30 5480 (STAR)	p.316
	• VDI30 5482 (DISC)		p.319
	• VDI40 5480 (DISC)	• VDI40 5480 (STAR)	p.316
	• VDI40 5482 (DISC)		p.319
	• VDI50 5480 (DISC)	• VDI50 5480 (STAR)	p.316
	• VDI50 5482 (DISC)		p.319

SCHERER FEINBAU

Model:	• VDZ120 L SCHAFT30 (STAR, VERTICAL) • VDZ120 L SCHAFT40 (STAR, VERTICAL) • VDZ120 R SCHAFT30 (STAR, VERTICAL)	• VDZ120 R SCHAFT40 (STAR, VERTICAL) • VDZ420 L (STAR, VERTICAL) • VDZ420 R (STAR, VERTICAL)	p.316

SCHUSTER

Model:	• VD20, P30 (DISC)		p.316
	• VTM350 (DISC)		p.319
	• VTM350 FUTURE LINE (STAR, VERTICAL)		p.316

SHANDONG PRECISION

Model:	• CH-6145-2T (STAR)		p.316

SMART

Model:	• NL 2000 ASY/BSY/AY/BY • NL 2500 M/SY/Y • NL 3000 BM/BLM	• NL 4000 M/LM • NL 5000 M/LM	p.354

SMEC

Model:	• PL 1600 M/CM • PL 20/25/35 • PL 2000/2500 • PL 240 LM/LMB • PL 250 VM • PL 45 LM/XLM/LY • PL 45M/LY • PL 800 V/VM R/L • PL 800VM • SL 1500, 2000M/Y/SY • SL 20 MC	• SL 2000 / 2500 / 3000 / 3500 • SL 25/35 • SL 250 MC • SL 3500M/Y • SL 45 • SL 4500 • SL 5500M • SL 4500LY • SLV 500M • SLV 800M	p.354

SOMAB

Model:	• TRANSMAB 500 (DISC)	• TRANSMAB 850 (DISC)	p.322

SPINNER

Model:	• TC 800 MC VDI50 (DISC) • TC108 MC (DISC) • TC110 MC (DISC) • TC400 (DISC) • TC46 (DISC) • TC52 (DISC) • TC600 MC VDI40 (DISC)	• TC600 MCY/SMCY VDI30 (STAR) • TC65 (DISC) • TC67 VDI30 (DISC) • TC67 VDI40 (DISC) • TC77 SMC (DISC) • TC80 VDI30 (DISC) • TC80 VDI40 (DISC)	p.325
	• TC800		p.354
	• TC800 MC VDI40 (DISC)		p.325
	• TC800 MCY		p.354

Driven tools for CNC lathes

	• TC82 VDI50 (DISC) • TS46 (DISC)	• TS66LMC (DISC)	p.325
	• UP65-SMC (STAR)		p.316

STYLE

Model:	• STYLE 750 (DISC)		p.325

TAJMAC-ZPS

Model:	• TCH 500 (DISC)	• TRANSMAB 600 (DISC)	p.322

TAKAMAZ

Model:	• XYT 51 (BMT45)		p.354

TAKISAWA

Model:	• TM-2000 Y2/T12		p.342
	• TM-2000 Y2/T12		p.344
	• TS-2000-5000 20ST		p.342
	• TS-2000-5000 20ST		p.344
	• TS3000 Y/YS 12ST • TS4000 Y/YS 12ST	• TS5000 Y/YS 12ST	p.346

TAKSAN

Model:	• TTC630 DUPLOMATIC (DISC)		p.322
	• TTC630 BARUFFALDI (DISC)		p.325

TONGTAI

Model:	• TCS-1500, 2000, 2500 • TD-2000, 2500Y 12ST • TD-2000, 2500Y 16ST	• TMT 2000 • TNL-120T	p.354

TOPPER

Model:	• TB 20Y (STAR)	• TB 25YMBC (STAR)	p.325
	• TB 25YMBC DIN1809 (STAR)		p.322
	• TBMR 200 (STAR)	• TNL 120 ALS (STAR)	p.325

TORNOS

Model:	• SWISSDECO		p.354

TRAUB

Model:	• TNA 300 (DISC)	• TNA 400 (DISC)	p.319
	• TNA 400.2 VDI30 (STAR)	• TNA 400.2 VDI40 (STAR)	p358
	• TND 200 (DISC)		p.325
	• TNE 300 (DISC)	• TNE 400 (DISC)	p.319
	• TNX 65 VDI30 (STAR)		p358

TRENS

Model:	• SBL300 (DISC)		p.319
	• SBL300 (STAR)	• SBL500 DIN5480 (DISC)	p.316
	• SBL500 DIN5482 (DISC)		p.319
	• SBL700 (DISC)		p.316

UVA

Model:	• T44 (DISC)	• T51 (DISC)	p.316

VICTOR

Model:	• V36 (DISC) • VTURN 16CV (STAR)		p.316
	• VTURN 20CV (DISC)		p.319
	• VTURN 20CV (STAR) • VTURN 23BCV (STAR) • VTURN 26/110CV (STAR)	• VTURN 26/60CV (STAR) • VTURN 36/40/45/46 CV (DIN5480) (STAR)	p.316
	• VTURN 40/45 CM/YCM • VTURN A16/A20 YSCM • VTURN A200 CM/SCM/YCM/YSCM	• VTURN A26 YSCM	p.354
	• VTURN II 20YCV (STAR)		p.316
	• VTURN S26 CM	• VTURN S36 CM	p.354
	• VTURN V760CV (STAR)		p.316
	• VTURN-NP16CM • VTURN-NP20CM	• VTURN-Q200	p.354
	• VTURN-V560CV (DISC)		p.319

VIPER

Model:	• VT2300YMS (DISC)	• VT2300YMS (STAR)	p.316

VOEST

Model:	• WNC300 (DISC) • WNC300 VDI40 (DISC)	• WNC400 (DISC) • WNC500 (DISC)	p.319

WEILER

Model:	• DZ45 VDI30 (DISC)		p.319
	• DZ67 (STAR)		p.316

WELE

Model:	• HL-200YS		p.354

WFL

Model:	• M35/M35G (STAR)		p.316
	• WNC300 (DISC) • WNC300 VDI40 (DISC)	• WNC400 (DISC) • WNC500 (DISC)	p.319

WIA(KIA)

Model:	• E160 LMA/LMC (DISC)	• E200 MA/MC (DISC)	p.322
	• L150 LMA/LMAS (DISC)		p.319
	• L150 SY (STAR)		p.316
	• L160 MA/LMA/LMSA		p.354
	• L200 SY (STAR)		p.316
	• L210 LMA/LMAS (DISC)		p.319
	• L2100 SY	• L230 MA/LMA/MC/LMSA	p.354
	• L250 SY (STAR)		p.316
	• L2600 SY • L300 MA/LMA/MC/LMC • L300 MSA/LMSA/MSC • L500 LMA	• LM1600 MS/SY • LM1800 MS/SY • LM2500	p.354
	• SKT 100 M (DISC)		p.322
	• SKT 15 LMS (DISC)		p.319

Driven tools for CNC lathes

	• SKT 160 M (DISC)	• SKT 200 M (DISC)	p.322
	• SKT 21 LMS (DISC)		p.319
	• SKT 210 (STAR) • SKT 210 SY (DISC)	• SKT 210 SY (STAR)	p.316
	• SKT 250 M		p.354
	• SKT 250 Y (STAR)	• SKT 300 (STAR)	p.316
	• SKT 300 M	• SKT 400	p.354
YAMA SEIKI			
Model:	• GTZ-2600Y		p.354
YCM			
Model:	• GT250 MA/LMA/MB/LMB (DISC)	• GT300 MA/LMA/MB/LMB (DISC)	p.322
	• NTC 1600 LS/LSY/M/LM/Y/LY	• NTC 2000 LS/LSY/M/LM/Y/LY	p.354
YOU JI			
Model:	• CY-550H		p.354

OPERATIONS WITH VDI STAR - TYPE TURRET

AXIAL OPERATION
STRAIGHT TOOL OLDER

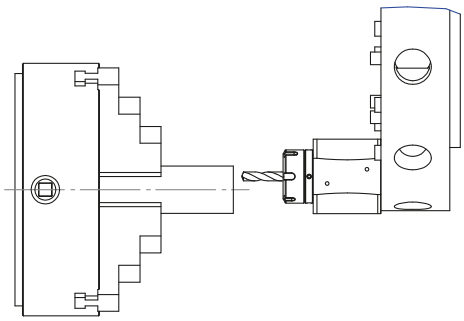

RADIAL OPERATION
ANGOLAR TOOL HOLDER 90° ANGLE

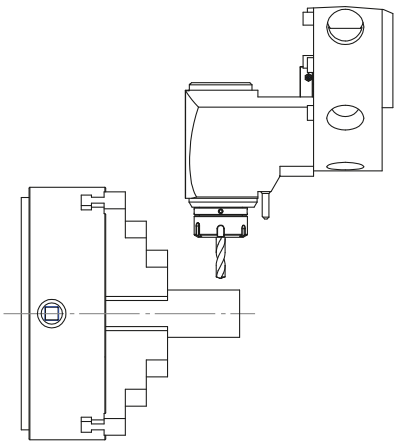

RIGHT AND LEFT HAND

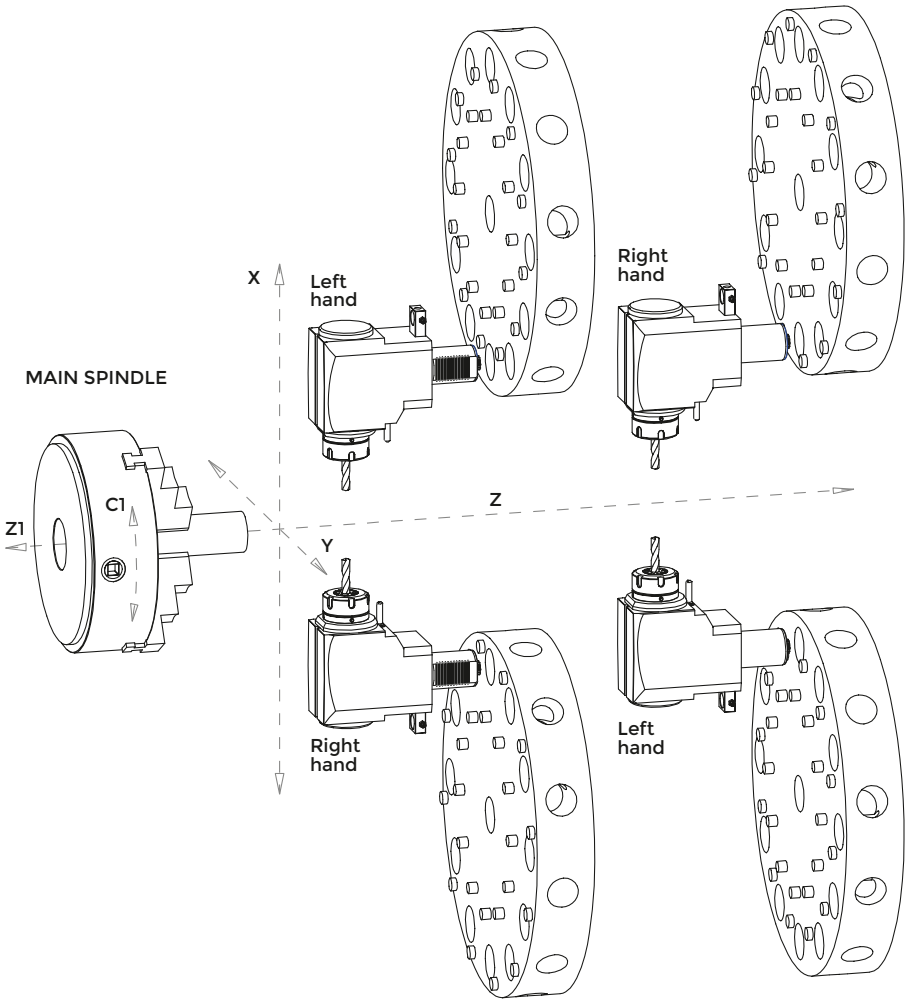

OPERATIONS WITH VDI STAR - TYPE TURRET

AXIAL OPERATION
ANGULAR TOOL HOLDER 90° ANGLE

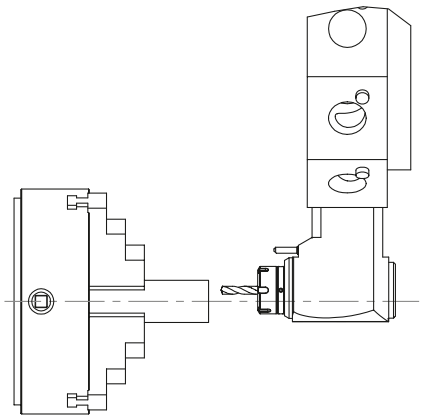

RADIAL OPERATION
STRAIGHT TOOL HOLDER

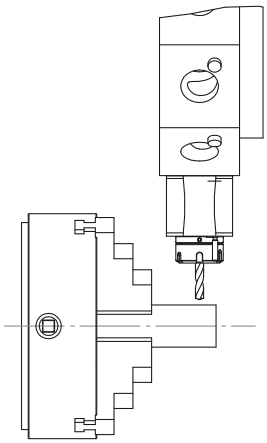

RIGHT AND LEFT HAND VERSION ON STAR TYPE TURRETS WITH MAIN AND SUB

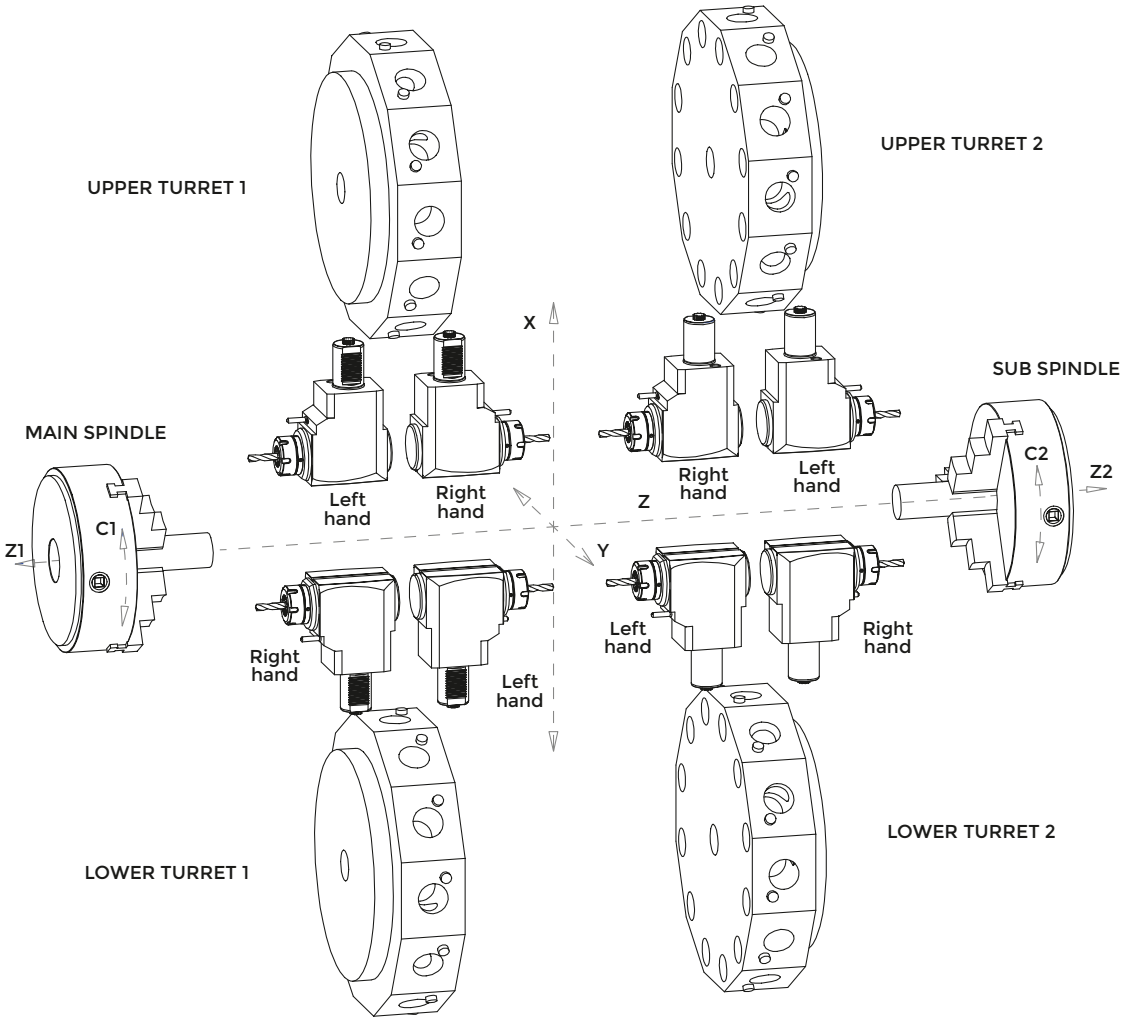

BIGLIA – B301/445/470/501(Y-S)/510/545/550/565/650/658/1200/446/465/745/765-B750/1250 16 ST.

Index of machines p. 303

CONNECTION TURRET BIGLIA

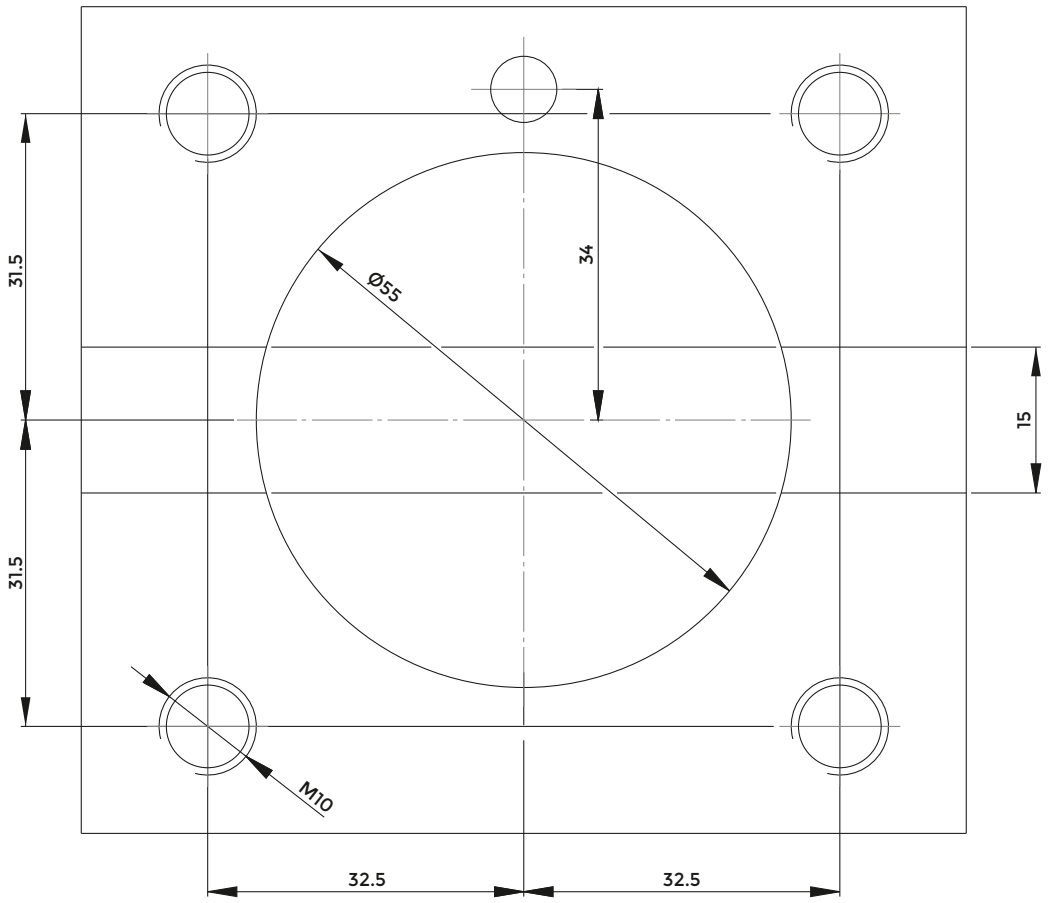

AXIAL DRILLING AND MILLING HEAD

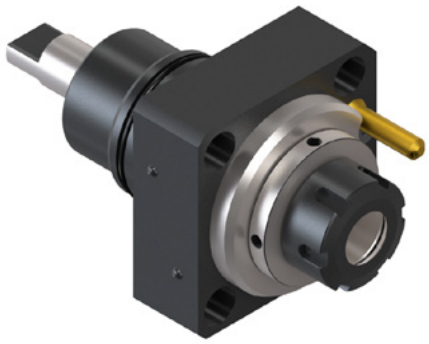

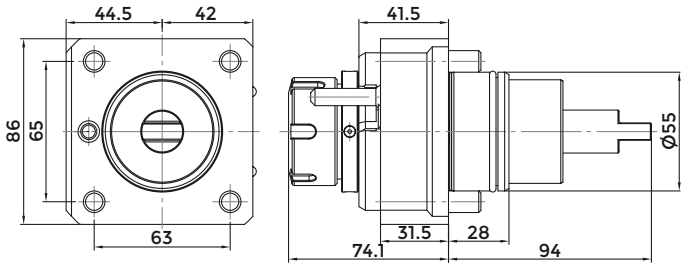

BIGLIA

COD.	ER	MAX SPEED (Rpm)	RATIO	MAX TORQUE (Nm)	INTERNAL COOLING	P Bar
124-05519	ER25	6000	1:1	50	NO	-
124-05520	ER25	6000	1:1	50	YES	20
124-05521	ER32	6000	1:1	50	NO	-
124-05522	ER32	6000	1:1	50	YES	20

RADIAL DRILLING AND MILLING HEAD

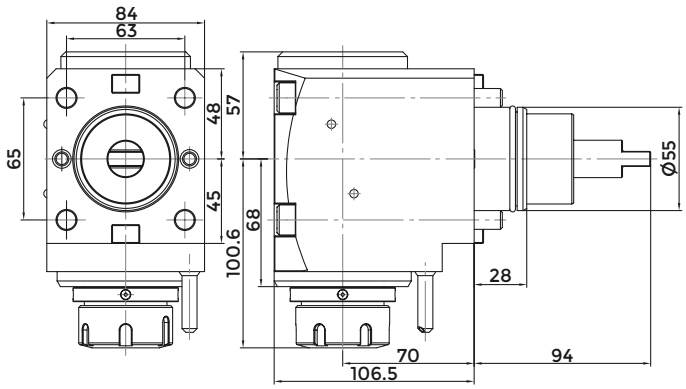

BIGLIA

COD.	ER	MAX SPEED (Rpm)	RATIO	MAX TORQUE (Nm)	INTERNAL COOLING	P Bar
124-05523	ER32	6000	1:1	50	NO	-
124-05524	ER32	6000	1:1	50	YES	20

DIN5480

Index of machines p. 303

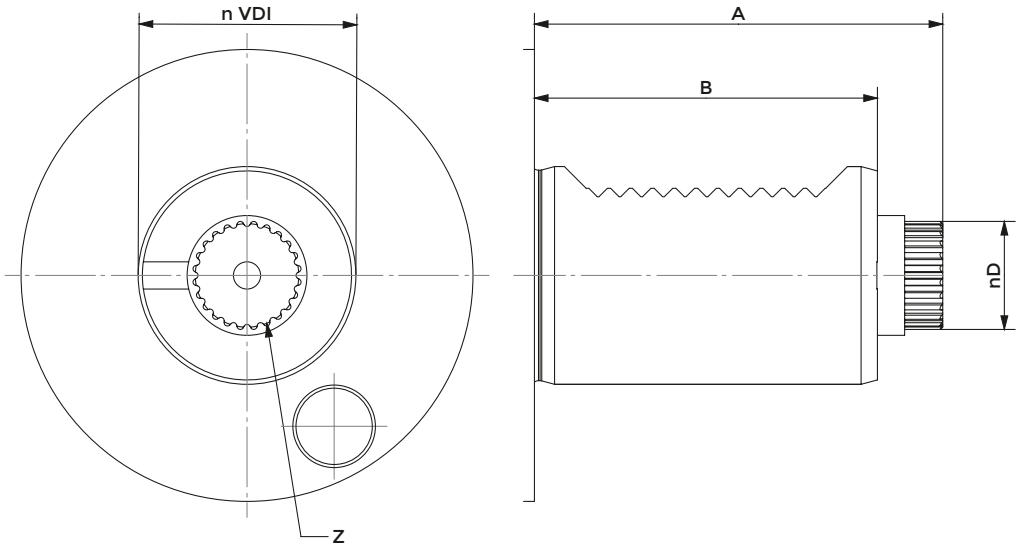

VDI	A	B	d	Z
30	67	55	15,8	18
40	75	63	19,8	24
50	93	78	23,8	18

AXIAL DRILLING AND MILLING HEAD

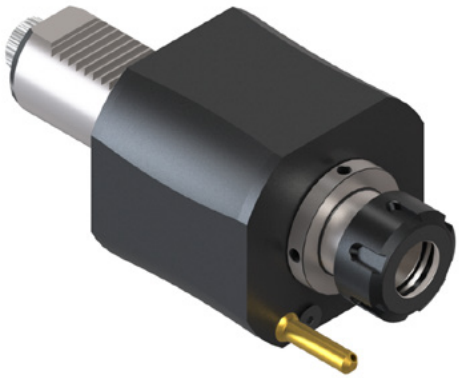

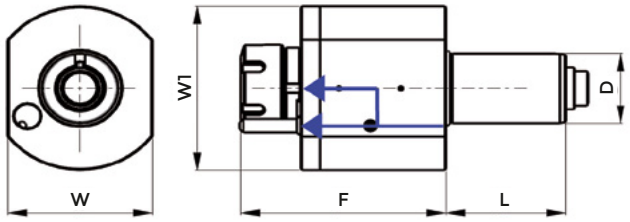

DIN5480 SAUTER

COD.	D	ER	INTERNAL COOLING	F	L	W	W1	MAX TORQUE (Nm)	MAX SPEED (Rpm)	RATIO	P Bar
116-43001	30	ER25	NO	87	55	64	68	28	6000	1:1	-
116-43002	30	ER25	YES	87	55	64	68	28	6000	1:1	20
116-44001	40	ER25	NO	105	63	80	86	50	6000	1:1	-
116-44002	40	ER25	YES	105	63	80	86	50	6000	1:1	20
116-44003	40	ER32	NO	108	63	80	86	50	6000	1:1	-
116-44004	40	ER32	YES	108	63	80	86	50	6000	1:1	20
116-45040	50	ER32	NO	114,1	78	88	88	80	6000	1:1	-
116-45041	50	ER32	YES	114,1	78	88	88	80	6000	1:1	20
116-45017	50	ER40	YES	116,1	78	88	88	80	6000	1:1	20

RADIAL DRILLING AND MILLING HEAD

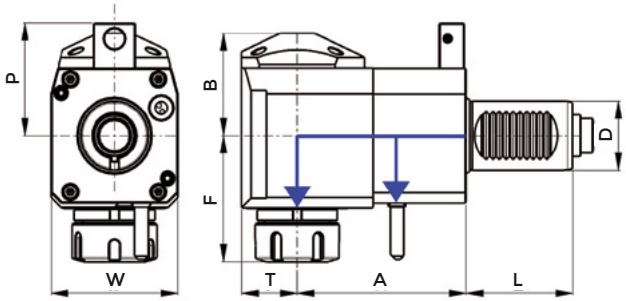

DIN5480 SAUTER

COD.	D	ER	INTERNAL COOLING	DIRECTION	A	B	F	L	P	T	W	MAX TORQUE (Nm)	MAX SPEED (Rpm)	RATIO	P Bar
116-43003	30	ER25	NO	DX	55	48	63	55	56	29	64	28	6000	1:1	-
116-43004	30	ER25	YES	DX	55	51	63	55	56	29	64	28	6000	1:1	20
116-43004L	30	ER25	YES	SX	55	51	63	55	56	29	64	28	6000	1:1	20
116-44005	40	ER25	NO	DX	80	59	70	63	65	36	75	50	6000	1:1	-
116-44006	40	ER25	YES	DX	80	62	70	63	65	36	75	50	6000	1:1	20
116-44006-80BAR	40	ER25	YES	DX	80	62	70	63	65	36	75	50	6000	1:1	80
116-43005	30	ER25	NO	DX	85	48	63	55	56	29	64	28	6000	1:1	-
116-43006	30	ER25	YES	DX	85	51	63	55	56	29	64	28	6000	1:1	20
116-54069	30	ER25	YES	DX/SX	85	51	65	55	56	29	64	28	6000	1:1	20
116-46001	30	ER25	NO	DX	100	48	63	55	56	29	64	28	6000	1:1	-
116-46002	30	ER25	YES	DX	100	51	63	55	56	29	64	28	6000	1:1	20
116-54097	40	ER25	NO	SX	100	59	72	63	65	36	75	50	6000	1:1	-
116-44007	40	ER25	NO	DX	100	59	70	63	65	36	75	50	6000	1:1	-
116-44008	40	ER25	YES	DX	100	62	70	63	65	36	75	50	6000	1:1	20
116-44009	40	ER32	NO	DX	80	59	74	63	65	36	75	50	6000	1:1	-
116-54098	40	ER32	YES	DX/SX	80	62	75	63	65	36	75	50	6000	1:1	20
116-44010	40	ER32	YES	DX	80	62	74	63	65	36	75	50	6000	1:1	20
116-44011	40	ER32	NO	DX	100	59	74	63	65	36	75	50	6000	1:1	-
116-44012	40	ER32	YES	DX	100	62	74	63	65	36	75	50	6000	1:1	20
116-44012L	40	ER32	YES	SX	100	62	74	63	65	36	75	50	6000	1:1	20
116-54099	40	ER32	YES	DX	100	72	75	63	65	36	75	50	6000	1:1	80
116-45053	50	ER32	NO	SX	110	64	117,1	78	73	42	88	80	6000	1:1	-
116-45054	50	ER32	YES	DX	110	64	117,1	78	73	42	88	80	6000	1:1	20
116-45030	50	ER40	YES	DX	110	64	119,1	78	73	42	88	80	6000	1:1	20

* left version on enquiry
ON REQUES AVAILABLE INTERNAL COOLANT 80 BAR

OFFSET RADIAL DRILLING AND MILLING HEAD

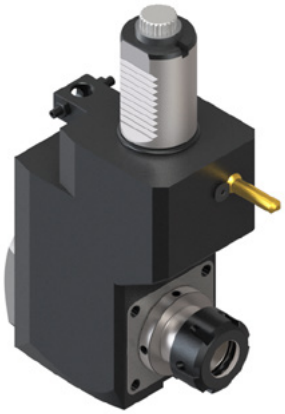

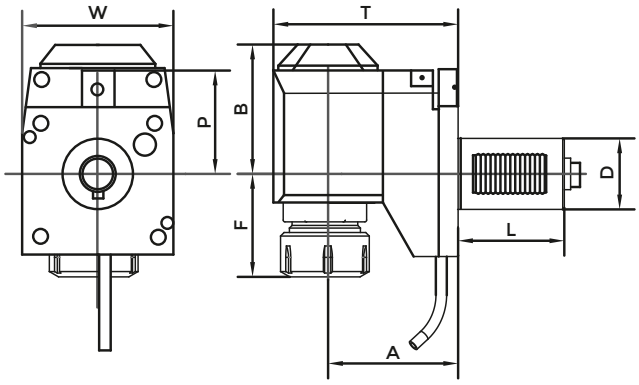

DIN 5480 SAUTER

COD.	D	ER	INTERNAL COOLING	DIRECTION	A	B	F	L	P	T	W	MAX TORQUE (Nm)	MAX SPEED (Rpm)	RATIO	P Bar
116-43008	30	ER25	NO	DX	75	71	40	55	56	104	64	28	6000	1:1	-
116-43009	30	ER25	YES	DX	75	74	40	55	56	104	64	28	6000	1:1	20
116-44016	40	ER32	NO	DX	120	92	41	63	65	156	75	50	6000	1:1	-
116-44017	40	ER32	YES	DX	120	95	41	63	65	156	75	50	6000	1:1	20

AXIAL - RADIAL DRILLING AND MILLING HEAD

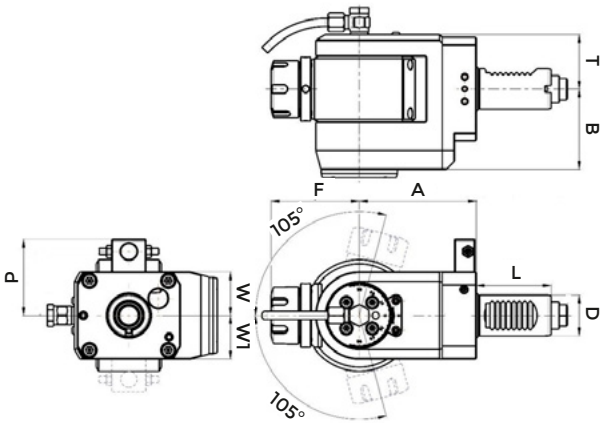

DIN 5480 SAUTER

COD.	D	ER	INTERNAL COOLING	DIRECTION	A	B	F	L	P	T	W	W1	MAX TORQUE (Nm)	MAX SPEED (Rpm)	RATIO	P Bar
116-54083	30	ER25	NO	DX	86	59	45	55	56	40	32	32	16	6000	1:1	-
116-54084	30	ER25	YES	DX	86	59	45	55	56	40	32	32	16	6000	1:1	20
116-54085	30	ER25	YES	SX	86	59	65	55	56	40	32	32	16	6000	1:1	20

DIN5482

Index of machines p. 303

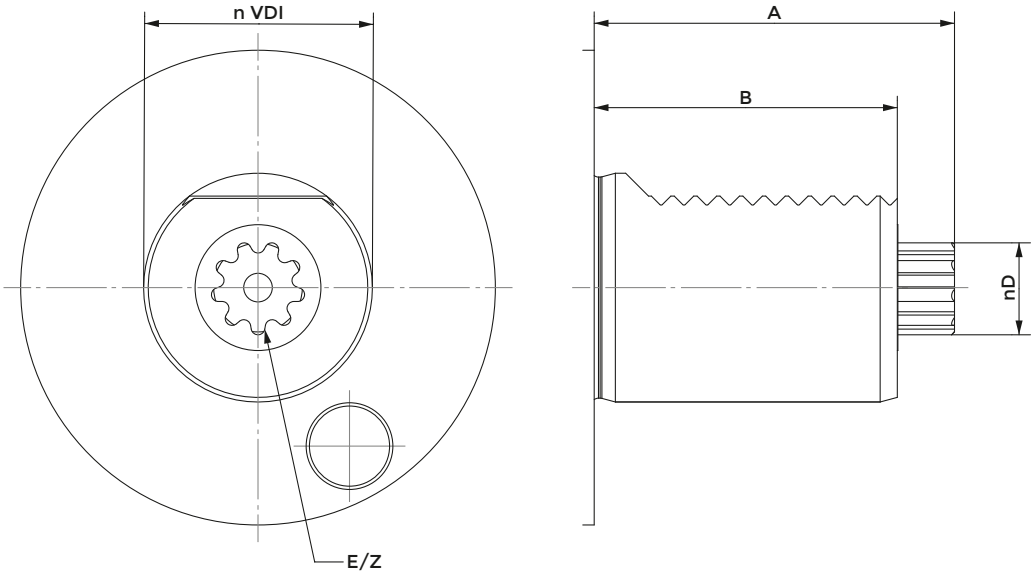

VDI	A	B	d	E	Z
30	55	45	14,5	B15X12	8
40	63	53	16,5	B17X14	9
50	93	78	19,5	B20X17	11

AXIAL DRILLING AND MILLING HEAD

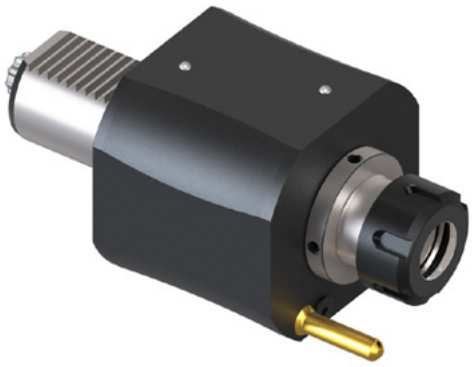

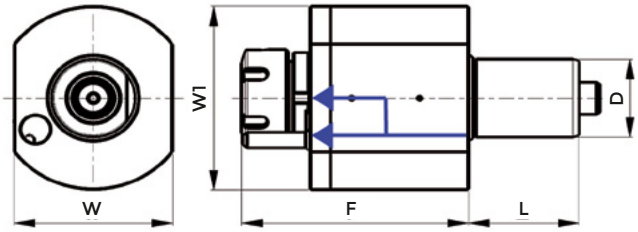

DIN5482 SAUTER

COD.	D	ER	INTERNAL COOLING	F	L	W	W1	MAX TORQUE (Nm)	MAX SPEED (Rpm)	RATIO	P Bar
116-43010	30	ER25	NO	87	45	64	68	28	6000	1:1	-
116-43011	30	ER25	YES	87	45	64	68	28	6000	1:1	20
116-44019	40	ER25	YES	105	53	80	86	50	6000	1:1	20
116-44020	40	ER32	NO	108	53	80	86	50	6000	1:1	-
116-44021	40	ER32	YES	108	53	80	86	50	6000	1:1	20
116-45013	50	ER40	YES	116,1	71	88	88	80	6000	1:1	20

RADIAL DRILLING AND MILLING HEAD

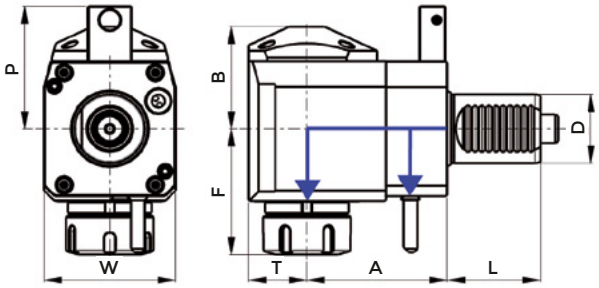

DIN5482 SAUTER

COD.	D	ER	INTERNAL COOLING	DIRECTION	A	B	F	L	P	T	W	MAX TORQUE (Nm)	MAX SPEED (Rpm)	RATIO	P Bar
116-43013	30	ER25	YES	DX	55	51	63	45	48	26	64	28	6000	1:1	20
116-44024	40	ER32	NO	DX	80	59	74	53	71	33	75	50	6000	1:1	-
116-44025	40	ER32	YES	DX	80	62	74	53	71	33	75	50	6000	1:1	20
116-45044	50	ER32	NO	DX	110	64	117,1	71	83	42	88	80	6000	1:1	-

* left version on enquiry
ON REQUES AVAILABLE INTERNAL COOLANT 80 BAR

OFFSET RADIAL DRILLING AND MILLING HEAD

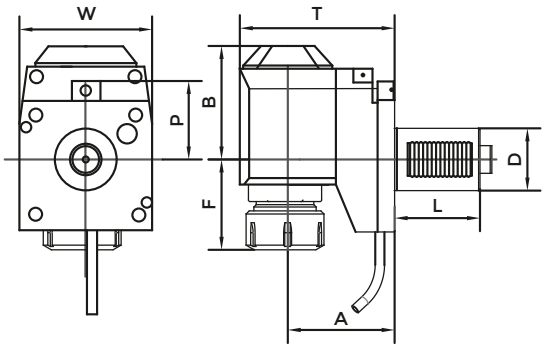

DIN5482 SAUTER

COD.	D	ER	INTERNAL COOLING	DIRECTION	A	B	F	L	P	T	W	MAX TORQUE (Nm)	MAX SPEED (Rpm)	RATIO	P Bar
116-54076	30	ER25	NO	SX	75	71	42	45	48	104	64	28	6000	1:1	-

* left version on enquiry
ON REQUES AVAILABLE INTERNAL COOLANT 80 BAR

AXIAL - RADIAL DRILLING AND MILLING HEAD WITH INTERNAL NUT

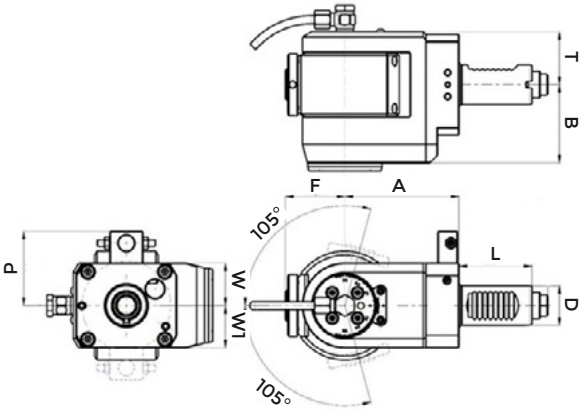

DIN5482 SAUTER

COD.	D	ER	INTERNAL COOLING	DIRECTION	A	B	F	L	P	T	W	W1	MAX TORQUE (Nm)	MAX SPEED (Rpm)	RATIO	P Bar
116-54080	30	ER16	NO	DX	86	59	45	55	48	40	32	32	16	6000	1:1	-

DIN1809

Index of machines p. 303

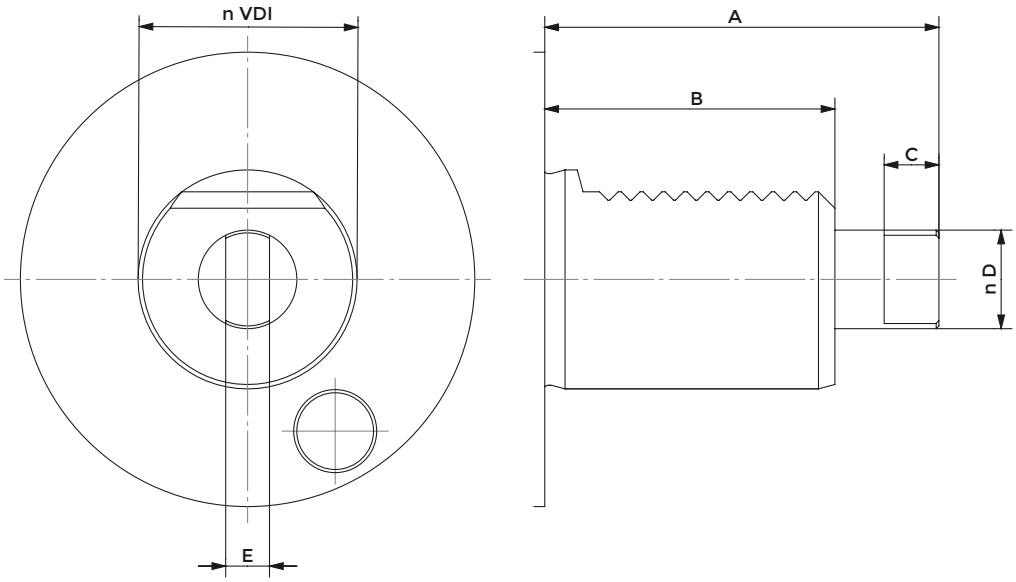

VDI	A	B	C	d	E
30	62	45	8	12	6
40	72	53	10	18	8
50	91	78	13	24	13

AXIAL DRILLING AND MILLING HEAD

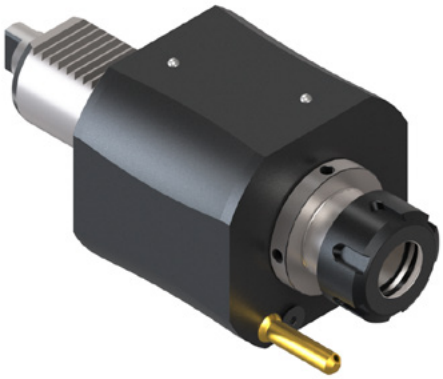

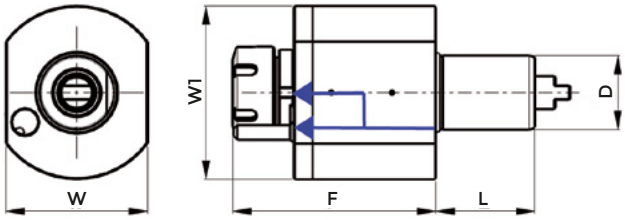

DIN1809 - DUPLOMATIC

COD.	D	ER	INTERNAL COOLING	F	L	W	W1	MAX TORQUE (Nm)	MAX SPEED (Rpm)	RATIO	P Bar
116-54065	30	ER25	YES	90	55	64	68	28	6000	1:1	20
116-43017	30	ER25	NO	87	45	64	68	28	6000	1:1	-
116-43018	30	ER25	YES	87	45	64	68	28	6000	1:1	20
116-44027	40	ER25	YES	105	53	80	86	50	6000	1:1	20
116-44028	40	ER32	NO	108	53	80	86	50	6000	1:1	-
116-44029	40	ER32	YES	108	53	80	86	50	6000	1:1	20
116-44030	40	ER32	NO	95	53	80	86	50	6000	1:1	-
116-44031	40	ER32	YES	95	53	80	86	50	6000	1:1	20
116-45039	50	ER32	YES	114,1	71	88	88	80	6000	1:1	20
116-45014	50	ER40	NO	116,1	71	88	88	80	6000	1:1	-
116-45015	50	ER40	YES	116,1	71	88	88	80	6000	1:1	20

OFFSET AXIAL DRILLING AND MILLING HEAD

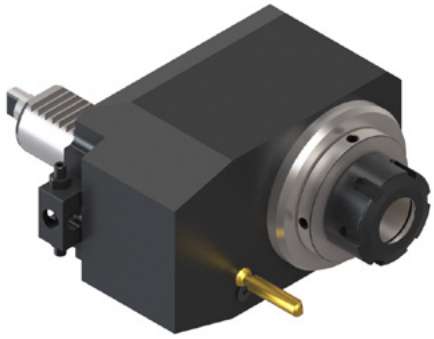

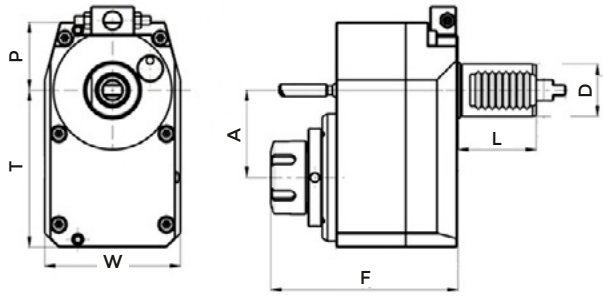

DIN1809 - DUPLOMATIC

COD.	D	ER	INTERNAL COOLING	DIRECTION	A	F	L	P	T	W	MAX TORQUE (Nm)	MAX SPEED (Rpm)	RATIO	P Bar
116-54074	30	ER25	NO	DX	50	107,6	45	40	90	78	14	12000	1:2	-

RADIAL DRILLING AND MILLING HEAD

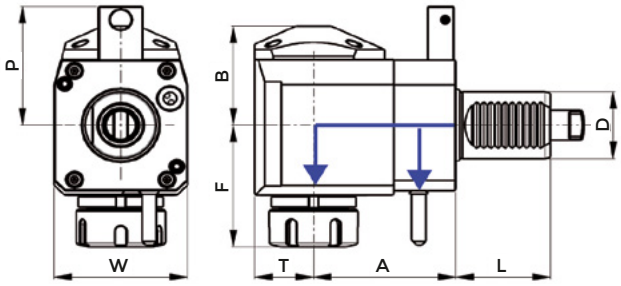

DIN1809 - DUPLOMATIC

COD.	D	ER	INTERNAL COOLING	DIRECTION	A	B	F	L	P	T	W	MAX TORQUE (Nm)	MAX SPEED (Rpm)	RATIO	P Bar
116-54068	30	ER25	NO	SX	55	48	65	55	48	29	64	28	6000	1:1	-
116-43019	30	ER25	NO	DX	55	48	63	45	48	29	64	28	6000	1:1	-
116-43020	30	ER25	YES	DX	55	51	63	45	48	29	64	28	6000	1:1	20
116-54092	40	ER32	NO	SX	80	59	75	53	71	36	75	50	6000	1:1	-
116-44034	40	ER32	NO	DX	80	59	74	53	71	36	75	50	6000	1:1	-
116-44035	40	ER32	YES	DX	80	62	74	53	71	36	75	50	6000	1:1	20
116-44038	40	ER32	NO	SX	100	59	74	53	-	36	75	50	6000	1:1	-
116-44039	40	ER32	YES	SX	100	62	74	53	-	36	75	50	6000	1:1	20
116-45050	50	ER32	YES	DX	110	64	117,1	71	83	42	88	80	6000	1:1	20
116-45051	50	ER32	YES	SX	110	64	117,1	71	83	42	88	80	6000	1:1	20
116-45026	50	ER40	YES	DX	110	64	119,1	71	83	42	88	80	6000	1:1	20

* left version on enquiry

ON REQUES AVAILABLE INTERNAL COOLANT 80 BAR

OFFSET RADIAL DRILLING AND MILLING HEAD

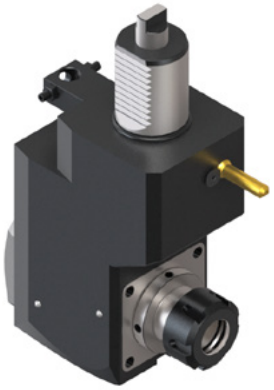

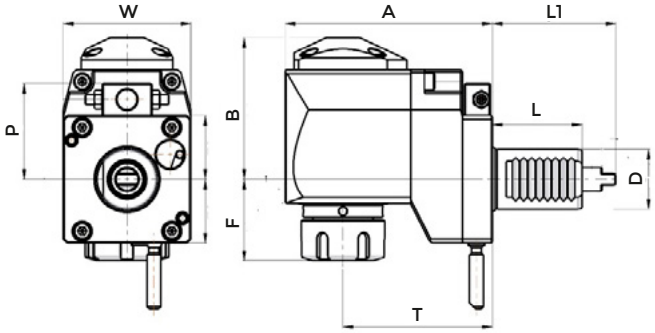

DIN1809 - DUPLOMATIC

COD.	D	ER	INTERNAL COOLING	DIRECTION	A	B	F	L	P	T	W	MAX TORQUE (Nm)	MAX SPEED (Rpm)	RATIO	P Bar
116-43022	30	ER25	NO	DX	104	71	40	45	48	75	64	28	6000	1:1	-
116-43022L	30	ER25	NO	SX	104	71	40	45	48	75	64	28	6000	1:1	-
116-43023	30	ER25	YES	DX	104	74	40	45	48	75	64	28	6000	1:1	20
116-46010	40	ER32	YES	DX	156	95	40	53	72	120	75	50	6000	1:1	20

ON REQUES AVAILABLE INTERNAL COOLANT 80 BAR

AXIAL - RADIAL DRILLING AND MILLING HEAD WITH INTERNAL NUT

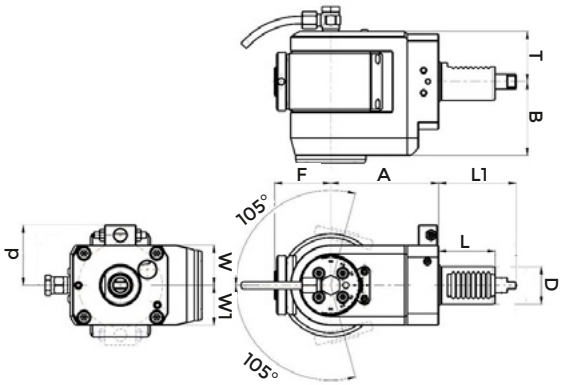

DIN1809 - DUPLOMATIC

COD.	D	ER	INTERNAL COOLING	DIRECTION	A	B	F	L	L1	P	T	W	W1	MAX TORQUE (Nm)	MAX SPEED (Rpm)	RATIO	P Bar
116-54082	30	ER16	NO	DX	79	59	45	45	62	48	40	32	32	16	6000	1:1	-
116-54081	30	ER25	NO	SX	79	59	45	45	62	48	40	32	32	16	6000	1:1	-
116-54114	40	ER25	NO	SX	79	59	65	53	72	71	40	32	32	16	6000	1:1	-

TOEM BARUFFALDI

Index of machines p. 303

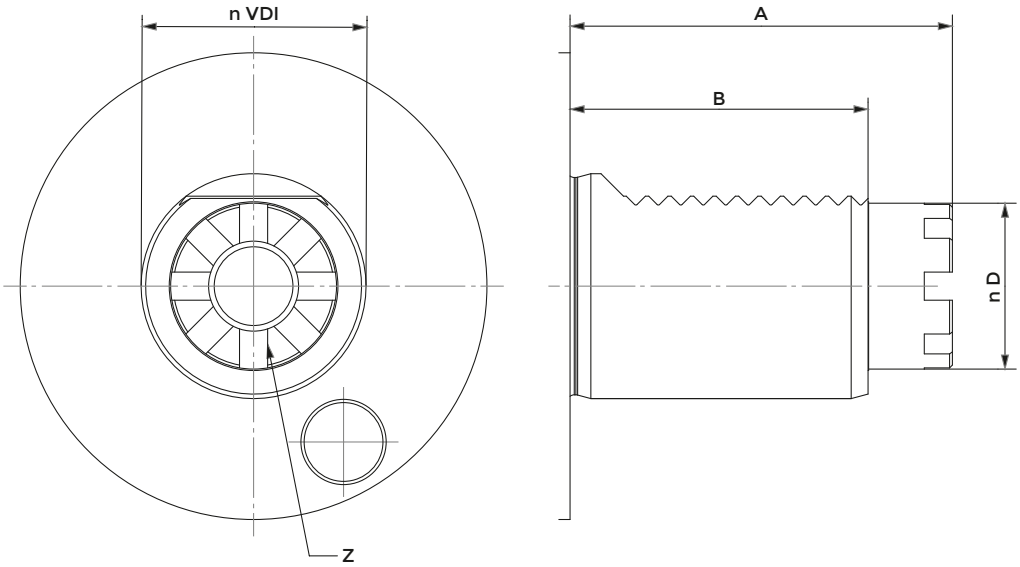

VDI	A	B	d	Z
30	59	45/53	24	6
40	68	53	32	8
50	84	70	40	8

AXIAL DRILLING AND MILLING HEAD

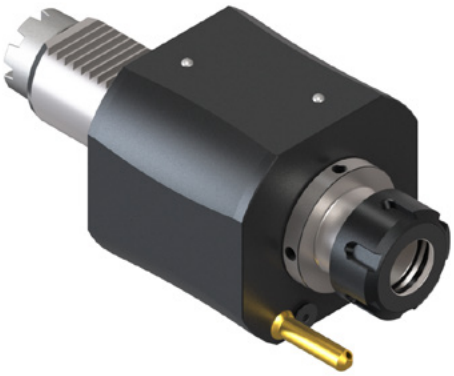

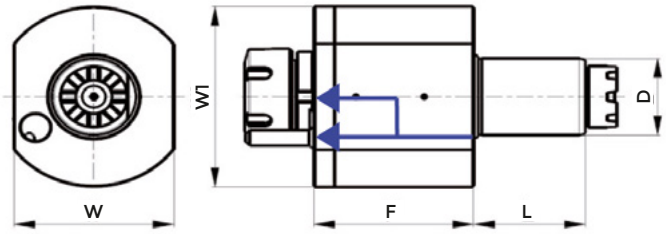

TOEM BARUFFALDI

COD.	D	ER	INTERNAL COOLING	F	L	W	W1	MAX TORQUE (Nm)	MAX SPEED (Rpm)	RATIO	P Bar
116-43024	30	ER25	NO	87	45	64	68	28	6000	1:1	-
116-43025	30	ER25	YES	87	45	64	68	28	6000	1:1	20
116-44045	40	ER25	YES	105	53	80	86	50	6000	1:1	20
116-44046	40	ER32	NO	108	53	80	86	50	6000	1:1	-
116-44047	40	ER32	YES	108	53	80	86	50	6000	1:1	20
116-45043	50	ER32	YES	114,1	71	88	88	80	6000	1:1	20
116-45018	50	ER40	NO	116,1	71	88	88	80	6000	1:1	-
116-45019	50	ER40	YES	116,1	71	88	88	80	6000	1:1	20

RADIAL DRILLING AND MILLING HEAD

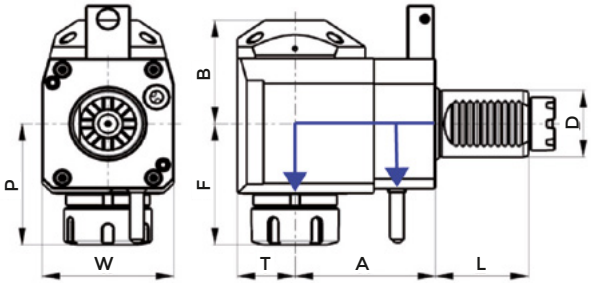

TOEM BARUFFALDI

COD.	D	ER	INTERNAL COOLING	DIRECTION	A	B	F	L	P	T	W	MAX TORQUE (Nm)	MAX SPEED (Rpm)	RATIO	P Bar
116-54072	30	ER25	YES	DX	55	61	65	45	48	29	64	28	6000	1:1	80
116-43026	30	ER25	NO	DX	55	48	63	45	48	29	64	28	6000	1:1	-
116-43027	30	ER25	YES	DX	55	51	63	45	48	29	64	28	6000	1:1	20
116-54070	30	ER25	NO	SX	85	48	65	45	48	29	64	28	6000	1:1	-
116-54071	30	ER25	YES	SX	85	48	65	45	48	29	64	28	6000	1:1	20
116-44049	40	ER25	YES	DX	80	62	70	53	71	36	75	50	6000	1:1	20
116-44050	40	ER32	NO	DX	80	59	74	53	71	36	75	50	6000	1:1	-
116-44051	40	ER32	YES	DX	80	62	74	53	71	36	75	50	6000	1:1	20
116-45059	50	ER32	YES	SX	110	64	117,1	71	83	42	88	80	6000	1:1	20
116-45033	50	ER40	NO	SX	110	64	119,1	71	83	42	88	80	6000	1:1	20
116-45034	50	ER40	YES	DX	110	64	119,1	71	83	42	88	80	6000	1:1	20
116-45035	50	ER40	YES	SX	110	64	119,1	71	83	42	88	80	6000	1:1	20

* left version on enquiry
ON REQUES AVAILABLE INTERNAL COOLANT 80 BAR

OFFSET RADIAL DRILLING AND MILLING HEAD

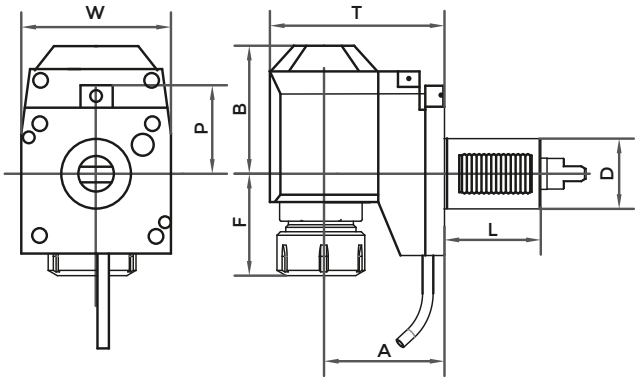

TOEM BARUFFALDI

COD.	D	ER	INTERNAL COOLING	DIRECTION	A	B	F	L	P	T	W	MAX TORQUE (Nm)	MAX SPEED (Rpm)	RATIO	P Bar
116-43029	30	ER25	NO	DX	75	71	40	45	48	104	64	28	6000	1:1	-
116-43030	30	ER25	YES	DX	75	74	40	45	48	104	64	28	6000	1:1	20
116-46012	40	ER25	YES	DX	120	95	37	53	71	156	75	50	6000	1:1	20
116-46013	40	ER32	NO	DX	120	92	41	53	71	156	75	50	6000	1:1	-
116-46014	40	ER32	YES	DX	120	95	41	53	71	156	75	50	6000	1:1	20

ON REQUES AVAILABLE INTERNAL COOLANT 80 BAR

AXIAL - RADIAL DRILLING AND MILLING HEAD

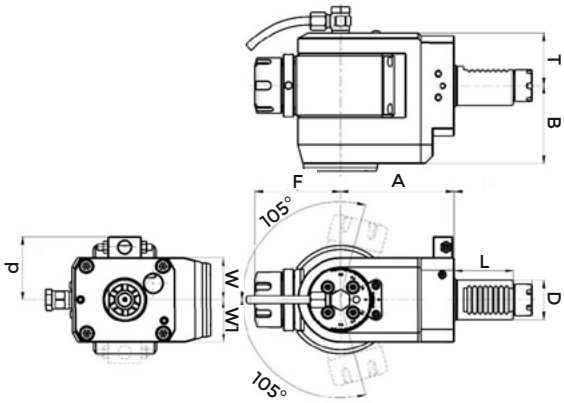

TOEM BARUFFALDI

COD.	D	ER	INTERNAL COOLING	DIRECTION	A	B	F	L	P	T	W	W1	MAX TORQUE (Nm)	MAX SPEED (Rpm)	RATIO	P Bar
116-54086	30	ER25	NO	DX	79	59	65	45	48	40	39	39	16	6000	1:1	-
116-54130	40	ER25	NO	SX	79	59	65	53	71	40	39	39	16	6000	1:1	-
116-54131	40	ER25	YES	SX	86	59	65	53	71	40	39	39	16	6000	1:1	20

HAAS

Index of machines p. 303

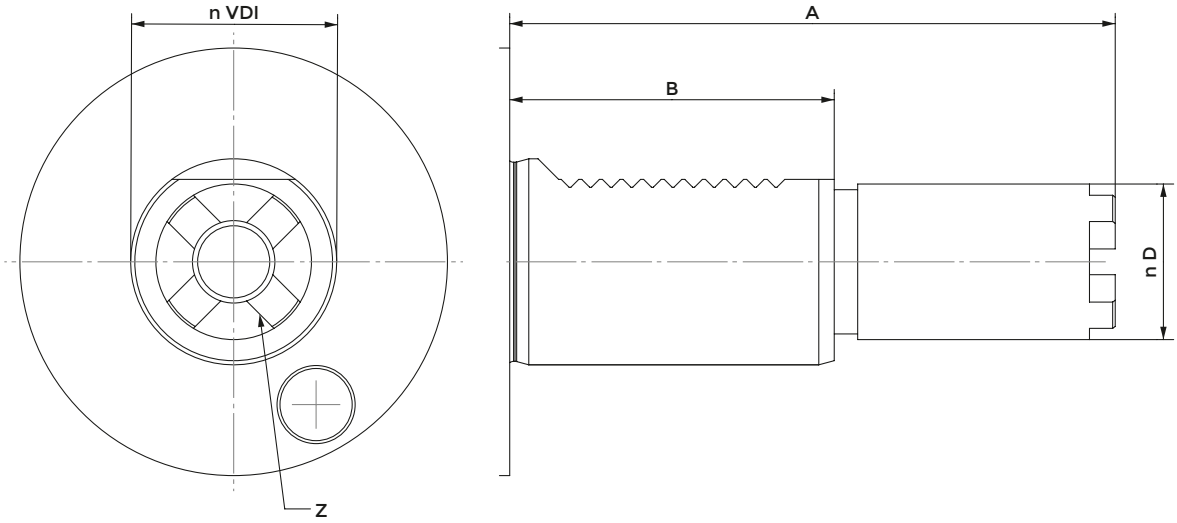

VDI	A	B	D	Z	TIPO
40	104.85	63	30,2	4	1
40	117,55	63	30,2	4	2
40	130,25	63	30,2	4	3

AXIAL DRILLING AND MILLING HEAD

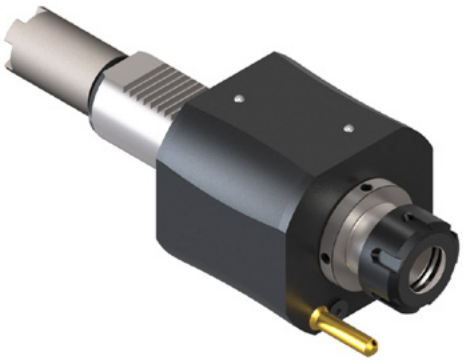

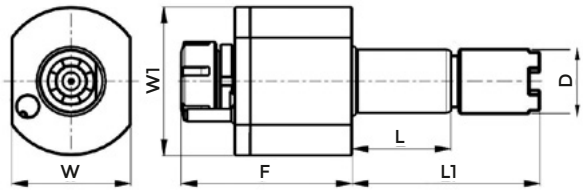

STEPPED - HAAS

COD.	D	ER	INTERNAL COOLING	F	L	L1	W	W1	MAX TORQUE (Nm)	MAX SPEED (Rpm)	RATIO	P Bar
116-44060	40	ER25	NO	105	63	117,55	80	86	50	6000	1:1	-
116-44058	40	ER32	NO	108	63	104,85	80	86	50	6000	1:1	-
116-44059	40	ER32	YES	108	63	104,85	80	86	50	6000	1:1	20
116-44062	40	ER32	NO	108	63	117,55	80	86	50	6000	1:1	-
116-44063	40	ER32	YES	108	63	117,55	80	86	50	6000	1:1	20
116-44066	40	ER32	NO	108	63	130,25	80	86	50	6000	1:1	-

RADIAL DRILLING AND MILLING HEAD

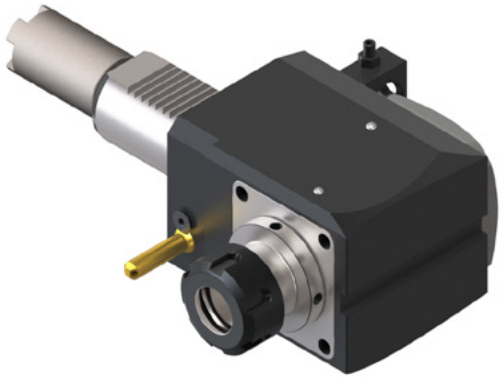

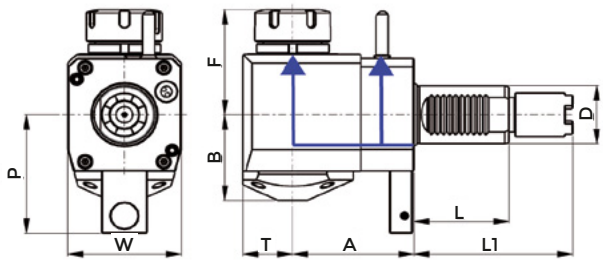

STEPPED - HAAS

COD.	D	ER	INTERNAL COOLING	DIRECTION	A	B	F	L	L1	P	T	W	MAX TORQUE (Nm)	MAX SPEED (Rpm)	RATIO	P Bar
116-44073	40	ER25	YES	SX	80	62	70	63	117,55	82	36	75	50	6000	1:1	20
116-54105	40	ER32	YES	SX	80	59	91	63	130,25	82	36	75	50	6000	1:1	20
116-47003	40	ER32	NO	SX	69	59	74	63	104,85	82	36	75	50	6000	1:1	-
116-54101	40	ER32	NO	SX	69	56	91	63	117,55	82	36	75	50	6000	1:1	-
116-47004	40	ER32	YES	SX	69	62	74	63	104,85	82	36	75	50	6000	1:1	20
116-47007	40	ER32	NO	SX	69	59	74	63	117,55	82	36	75	50	6000	1:1	-
116-47008	40	ER32	YES	SX	69	62	74	63	117,55	82	36	75	50	6000	1:1	20
116-44074	40	ER32	NO	SX	80	59	74	63	117,55	82	36	75	50	6000	1:1	-
116-44075	40	ER32	YES	SX	80	62	74	63	117,55	82	36	75	50	6000	1:1	20
116-44078	40	ER32	NO	SX	80	59	74	63	130,25	82	36	75	50	6000	1:1	-

ON REQUES AVAILABLE INTERNAL COOLANT 80 BAR

OFFSET RADIAL DRILLING AND MILLING HEAD

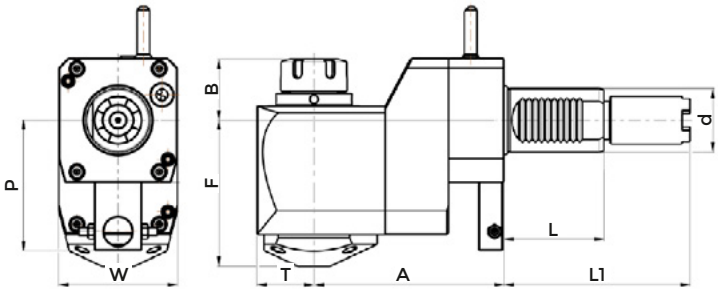

STEPPED - HAAS

COD.	D	ER	INTERNAL COOLING	DIRECTION	A	B	F	L	L1	P	T	W	MAX TORQUE (Nm)	MAX SPEED (Rpm)	RATIO	P Bar
116-54110	40	ER32	NO	SX	120	92	42	63	117,55	82	36	75	50	6000	1:1	-
116-54113	40	ER32	YES	SX	120	95	42	63	117,55	82	36	75	50	6000	1:1	20

AXIAL - RADIAL DRILLING AND MILLING HEAD

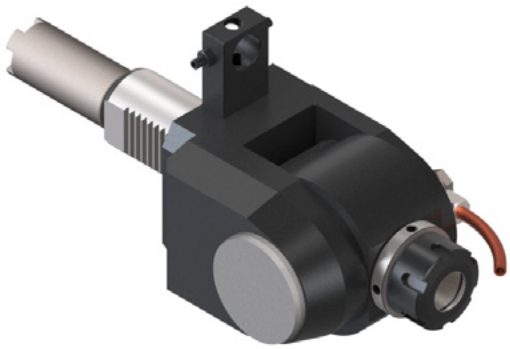

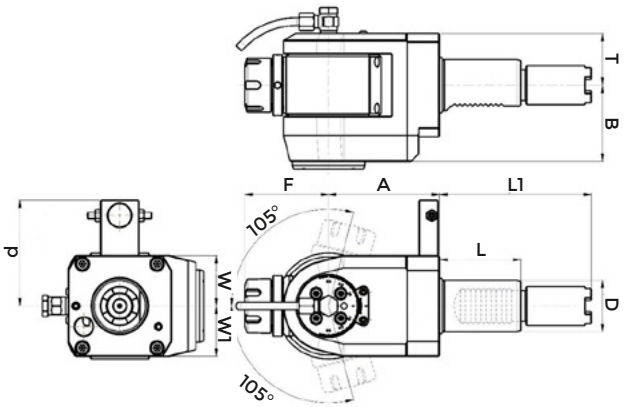

STEPPED - HAAS

COD.	D	ER	INTERNAL COOLING	DIRECTION	A	B	F	L	L1	P	T	W	W1	MAX TORQUE (Nm)	MAX SPEED (Rpm)	RATIO	P Bar
124-04009	40	ER25	YES	SX	86	59	65	63	130,25	82	40	39	39	16	6000	1:1	20

OKUMA - BMT60 - LB2000 EX (M) - LB2500 EX (M) - LB3000 EX (M,MY)
LT2000 EX - LB3000 EX (MW,MYW) - LU2000 EX - LU2500 EX
LU3000 EX (M,MW,MY) - GENOS L300 (MY,MW,MYW)

Index of machines p. 303

CONNECTION TURRET BMT60

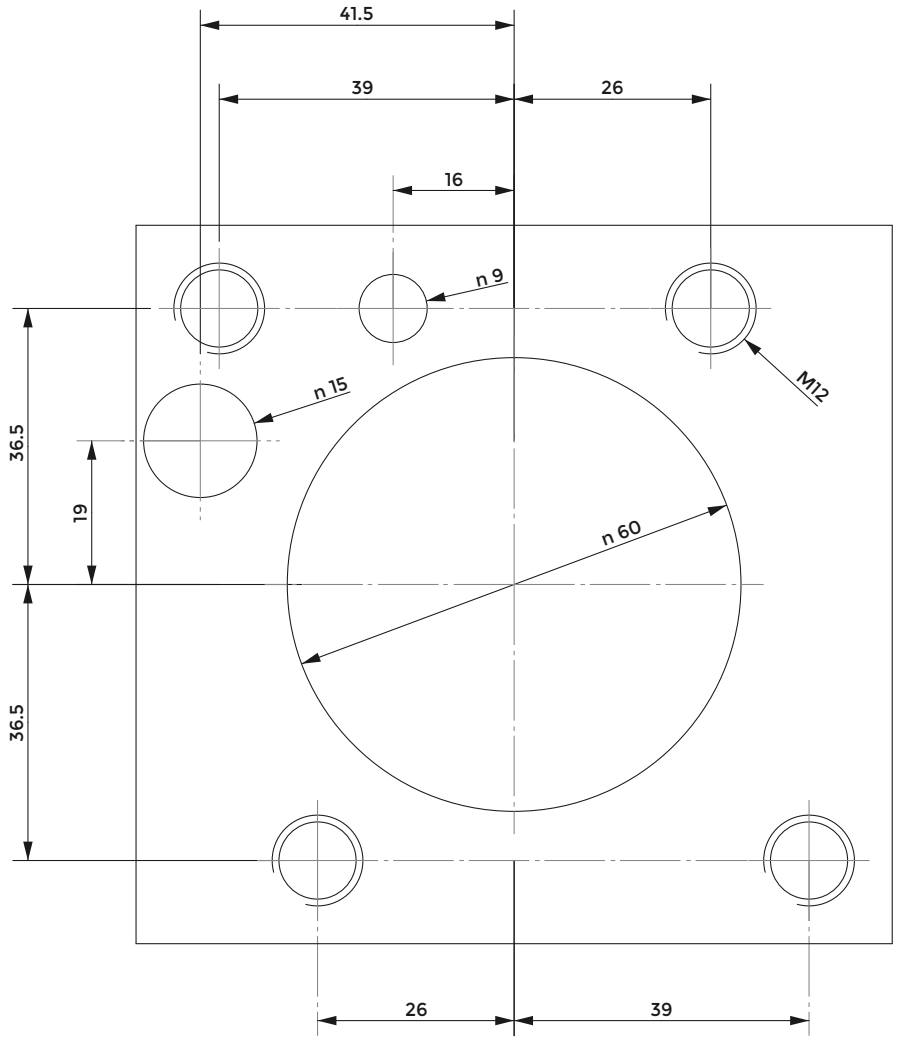

AXIAL DRILLING AND MILLING HEAD

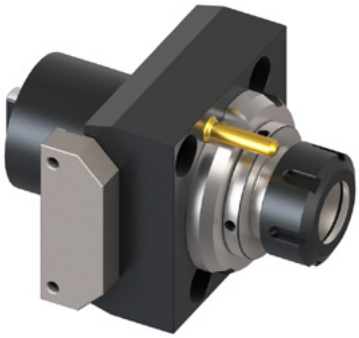

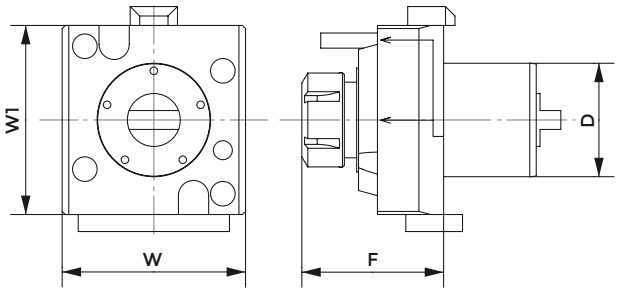

OKUMA BMT60

COD.	D	ER	INTERNAL COOLING	A	B	F	MAX TORQUE (Nm)	MAX SPEED (Rpm)	RATIO	P Bar
124-06005	60	ER32	NO	87	97	100	70	6000	1:1	-
124-06006	60	ER32	YES	87	97	100	70	6000	1:1	20

RADIAL DRILLING AND MILLING HEAD

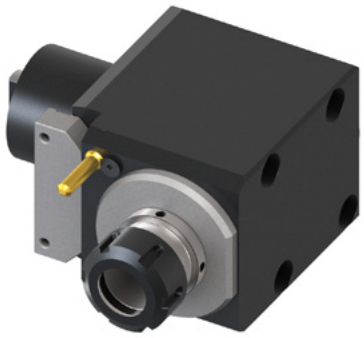

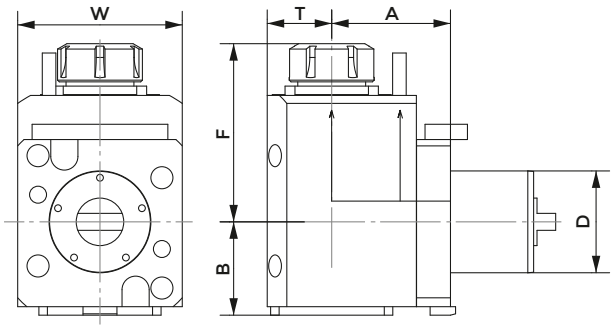

OKUMA BMT60

COD.	D	ER	INTERNAL COOLING	DIRECTION	A	B	F	T	W	MAX TORQUE (Nm)	MAX SPEED (Rpm)	RATIO	P Bar
124-06007	60	ER32	NO	DX/SX	70	59	111	38	94	70	6000	1:1	-
124-06008	60	ER32	YES	DX/SX	70	59	111	38	94	70	6000	1:1	20

DOUBLE RADIAL DRILLING AND MILLING HEAD WITH INTERNAL NUT

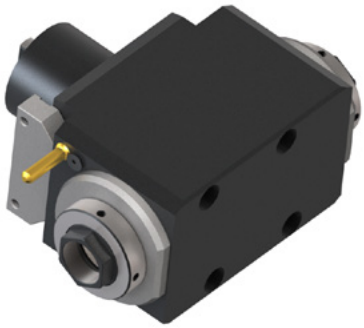

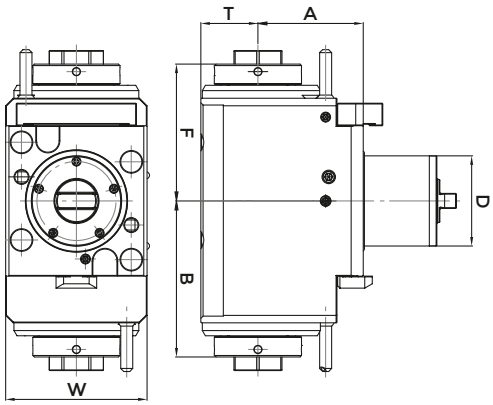

DOUBLE OKUMA BMT60

COD.	D	ER	INTERNAL COOLING	DIRECTION	A	B	F	T	W	L	MAX TORQUE (Nm)	MAX SPEED (Rpm)	RATIO	P Bar
124-06602	60	32	YES	DX/SX	70	103.8	91	38	94	49	70	6000	1:1	20

OKUMA - BMT60 - LB4000 EX (M)

Index of machines p. 303

CONNECTION TURRET OKUMA BMT60

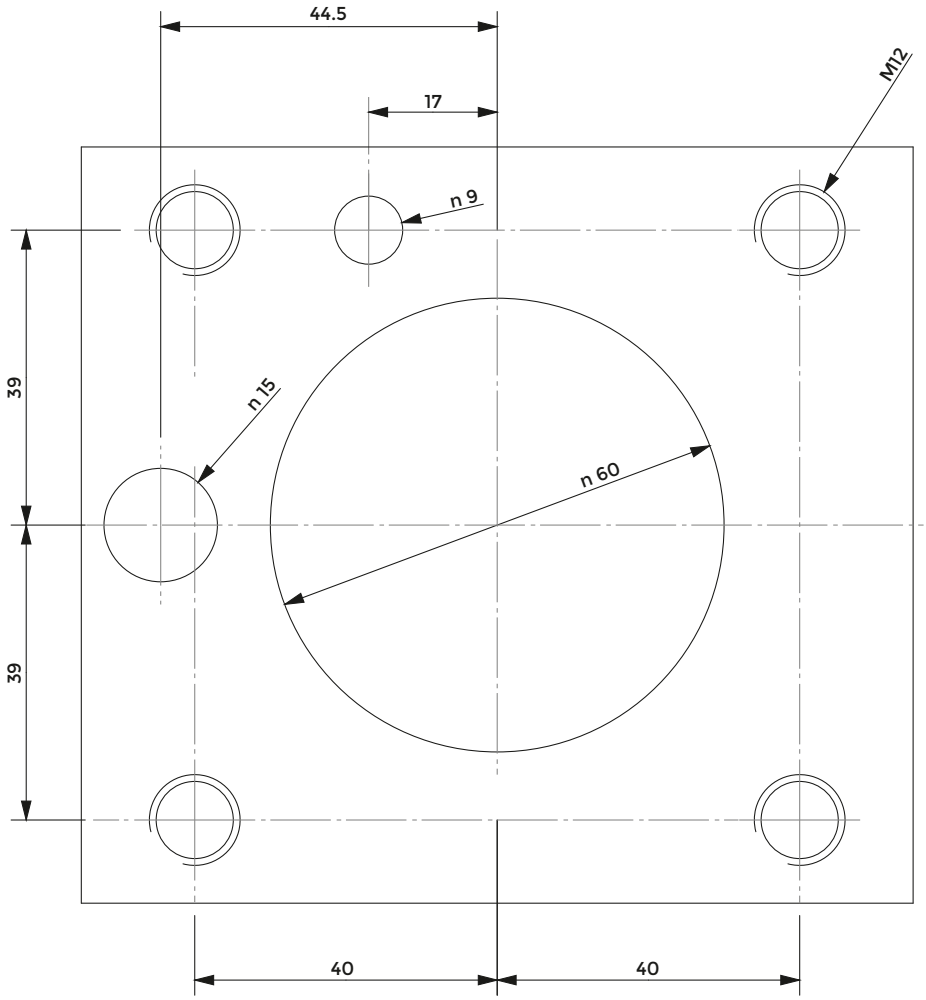

AXIAL DRILLING AND MILLING HEAD

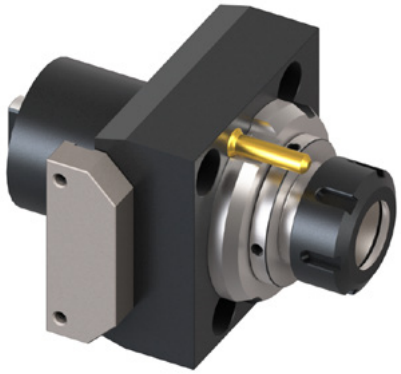

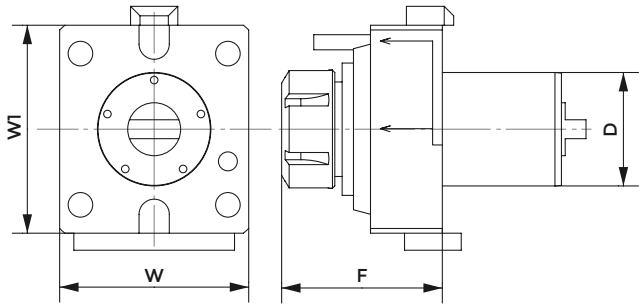

OKUMA BMT60

COD.	D	ER	INTERNAL COOLING	A	B	F	MAX TORQUE (Nm)	MAX SPEED (Rpm)	RATIO	P Bar
124-06009	60	ER40	NO	82	100	110	80	6000	1:1	-
124-06010	60	ER40	YES	82	100	110	80	6000	1:1	20

RADIAL DRILLING AND MILLING HEAD

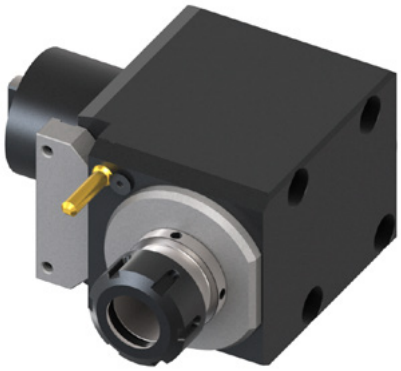

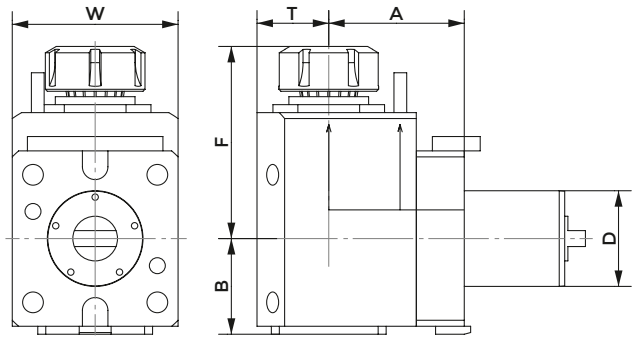

OKUMA BMT60

COD.	D	ER	INTERNAL COOLING	DIRECTION	A	B	F	T	W	MAX TORQUE (Nm)	MAX SPEED (Rpm)	RATIO	P Bar
124-06011	60	ER40	NO	DX/SX	85	64	121	44	100	80	6000	1:1	-
124-06012	60	ER40	YES	DX/SX	85	64	121	44	100	80	6000	1:1	20
124-06014	60	ER40	YES	DX/SX	85	64	121	44	100	80	6000	1:1	80

AXIAL DRILLING AND MILLING HEAD

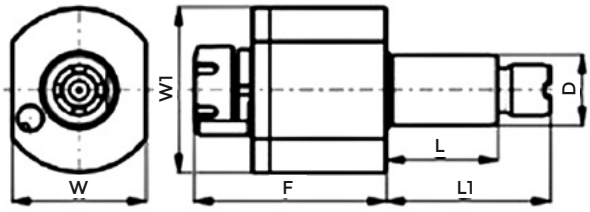

STEPPED - OKUMA

COD.	D	ER	INTERNAL COOLING	F	L	L1	W	W1	MAX TORQUE (Nm)	MAX SPEED (Rpm)	RATIO	P Bar
116-54066	30	ER25	YES	88,5	55	69	67	67	28	6000	1:1	80
116-43031	30	ER25	NO	87	55	69	64	68	28	6000	1:1	-
116-43032	30	ER25	YES	87	55	69	64	68	28	6000	1:1	20
116-44098	40	ER25	NO	105	63	93	80	86	50	6000	1:1	-
116-54090	40	ER32	YES	93,5	63	93	79	79	50	6000	1:1	80
116-54001	40	ER32	NO	108	63	93	80	86	50	6000	1:1	-
116-54002	40	ER32	YES	108	63	93	80	86	50	6000	1:1	20
116-54005	40	ER32	NO	108	63	101	80	86	50	6000	1:1	-
116-54006	40	ER32	YES	108	63	101	80	86	50	6000	1:1	20
116-54119	50	ER32	YES	114	71	106	88	88	80	6000	1:1	80
116-54120	50	ER40	NO	116	71	106	88	88	80	6000	1:1	-

RADIAL DRILLING AND MILLING HEAD

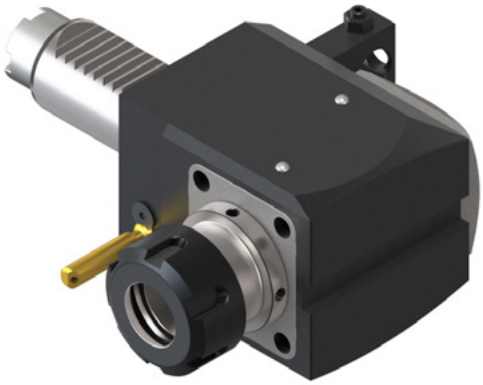

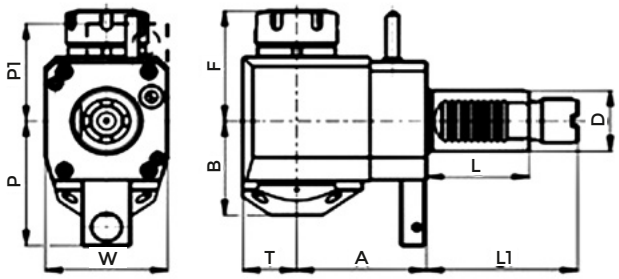

STEPPED - OKUMA

COD.	D	ER	INTERNAL COOLING	DIRECTION	A	B	F	L	L1	P	T	W	P Bar
116-43033	30	ER25	NO	DX	85	48	63	55	69	-	29	64	-
116-43035	30	ER25	NO	SX	55	48	63	55	69	72	29	64	-
116-43036	30	ER25	YES	SX	55	51	63	55	69	72	29	64	20
116-54007	40	ER25	NO	SX	80	59	70	63	93	82	36	75	-
116-54009	40	ER32	NO	SX	80	59	74	63	93	82	36	75	-
116-54010	40	ER32	YES	SX	80	62	74	63	93	82	36	75	20
116-54014	40	ER32	YES	SX	80	62	74	63	101	82	36	75	20
116-54017	40	ER32	NO	DX	80	59	74	63	93	-	36	75	-
116-54018	40	ER32	YES	DX	80	62	74	63	93	-	36	75	20
116-54104	40	ER32	YES	SX	67	62	91	63	93	82	36	75	20
116-54106	40	ER32	YES	SX	80	62	91	63	93	82	36	75	20
116-54127	50	ER32	YES	SX	110	64	117	71	106	102	42	88	20
116-54128	50	ER40	NO	SX	110	64	119	71	106	102	42	88	-
116-54129	50	ER40	YES	SX	110	64	119	71	106	102	42	88	20

ON REQUES AVAILABLE INTERNAL COOLANT 80 BAR

OFFSET RADIAL DRILLING AND MILLING HEAD

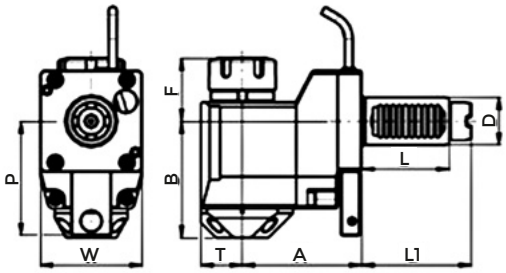

STEPPED - OKUMA

COD.	D	ER	INTERNAL COOLING	DIRECTION	A	B	F	L	L1	P	T	W	MAX TORQUE (Nm)	MAX SPEED (Rpm)	RATIO	P Bar
116-48002	40	ER25	YES	SX	120	95	37	63	104,85	82	36	75	50	6000	1:1	20
116-48004	40	ER32	YES	SX	120	95	41	63	104,85	82	36	75	50	6000	1:1	20

ON REQUES AVAILABLE INTERNAL COOLANT 80 BAR

AXIAL - RADIAL DRILLING AND MILLING HEAD

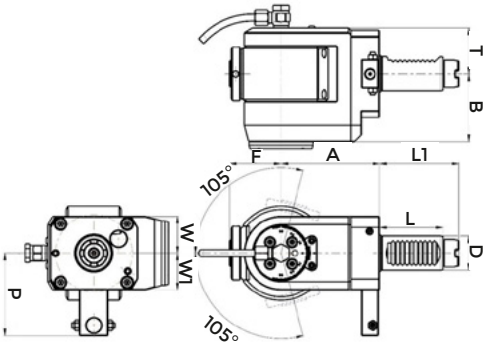

STEPPED - OKUMA

COD.	D	ER	INTERNAL COOLING	DIRECTION	A	B	F	L	P	T	W	W1	MAX TORQUE (Nm)	MAX SPEED (Rpm)	RATIO	P Bar
116-54087	30	ER16	NO	SX	86	59	45	55	72	40	32	32	16	6000	1:1	-
116-54115	40	ER25	NO	SX	86	59	65	63	-	40	39	39	16	6000	1:1	-

AXIAL DRILLING AND MILLING HEAD

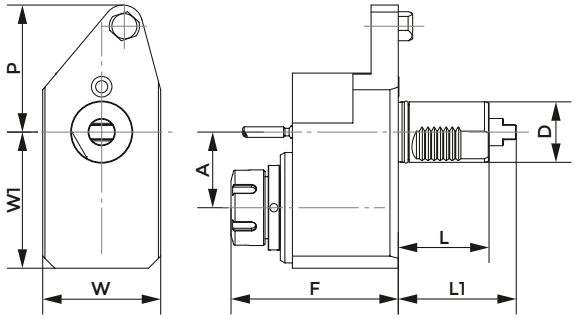

MAZAK

COD.	D	ER	INTERNAL COOLING	F	A	L	L1	P	W	W1	MAX TORQUE (Nm)	MAX SPEED (Rpm)	RATIO	P Bar
116-54053	40	ER32	NO	110,6	50	60	61	84	78	90	50	6000	1:1	-

RADIAL DRILLING AND MILLING HEAD

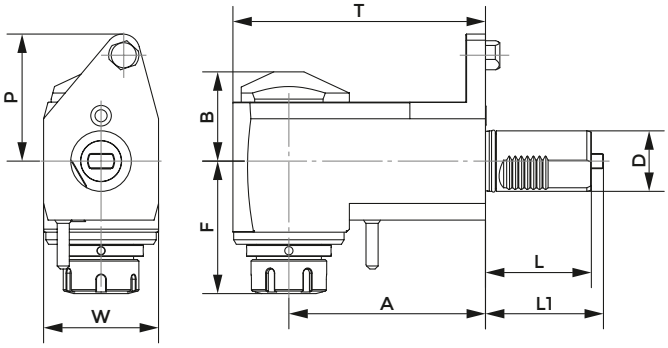

MAZAK

COD.	D	ER	INTERNAL COOLING	DIRECTION	A	B	F	L	L1	P	T	W	MAX TORQUE (Nm)	MAX SPEED (Rpm)	RATIO	P Bar
116-54049	40	ER32	NO	DX	100	59	87,6	60	61	79	137	76	50	6000	1:1	-

AXIAL DRILLING AND MILLING HEAD

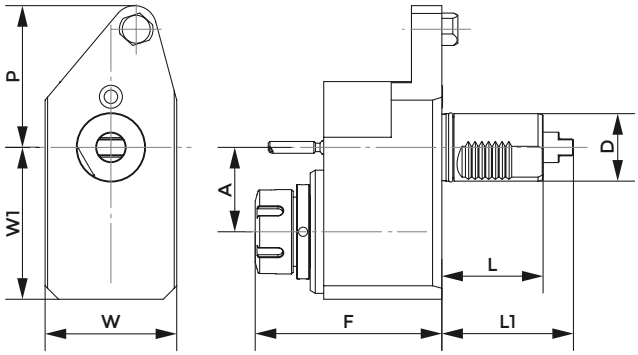

MAZAK

COD.	D	ER	INTERNAL COOLING	F	A	L	L1	P	W	W1	MAX TORQUE (Nm)	MAX SPEED (Rpm)	RATIO	P Bar
116-54019	40	ER32	NO	110,6	50	60	78	84	78	90	50	6000	1:1	-
116-54044	40	ER32	YES	110,6	50	60	78	84	78	90	50	6000	1:1	20

RADIAL DRILLING AND MILLING HEAD

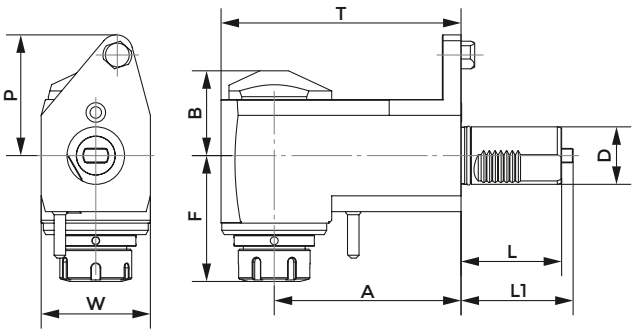

MAZAK

COD.	D	ER	INTERNAL COOLING	DIRECTION	A	B	F	L	L1	P	T	W	MAX TORQUE (Nm)	MAX SPEED (Rpm)	RATIO	P Bar
116-54020	40	ER32	NO	DX	130	62	87,6	70	78	84	167	76	50	6000	1:1	-
116-54040	40	ER32	NO	SX	130	62	87,6	70	78	84	167	76	50	6000	1:1	-
116-54041	40	ER32	YES	DX	130	62	87,6	70	78	84	167	76	50	6000	1:1	20
116-54093	40	ER32	YES	DX	100	62	87,6	60	61	68	137	76	50	6000	1:1	20
116-54095	40	ER32	YES	SX	100	62	87,6	60	61	68	137	76	50	6000	1:1	-
116-54096	40	ER32	YES	DX	100	62	87,6	60	61	68	137	76	50	6000	1:1	80

MAZAK BMT68 – QTC/QTU 100-350 M/MY/MS/MSY
QT/QTS 100-250 M/MY/MS/MSY - QT 200-250 M/MY/MS/MSY (16D)

Index of machines p. 303

CONNECTION TURRET MAZAK BMT68

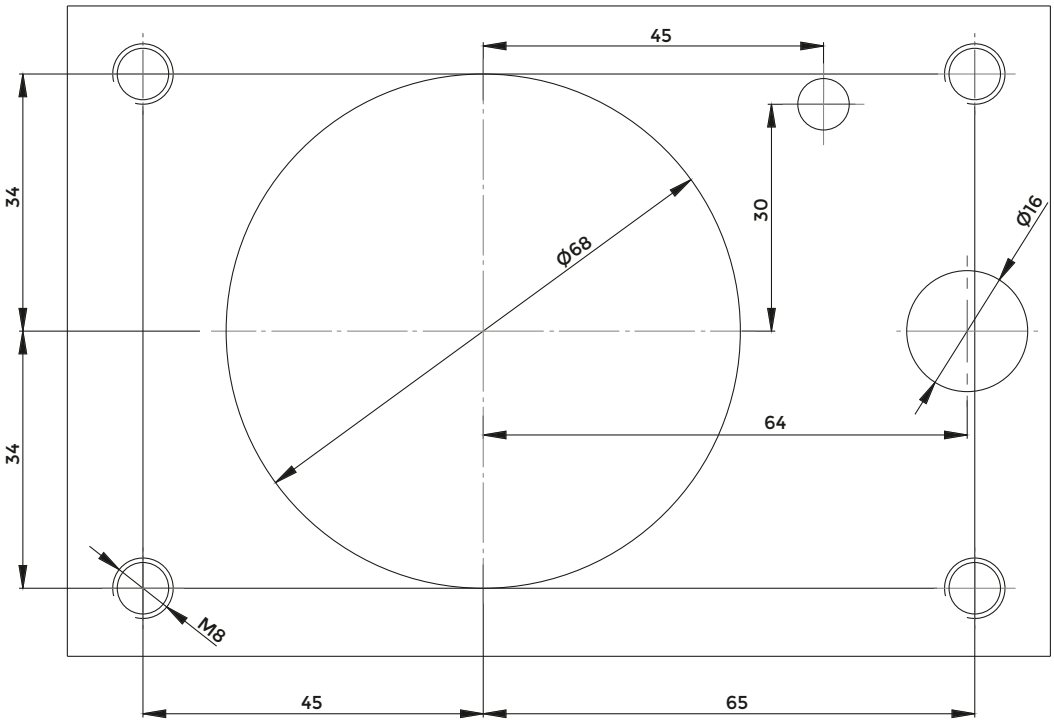

AXIAL DRILLING AND MILLING HEAD

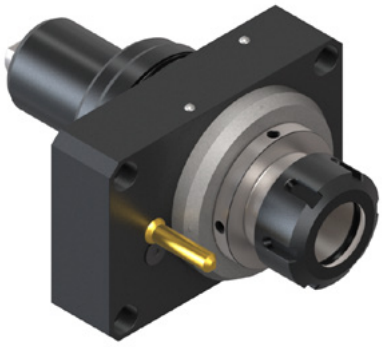

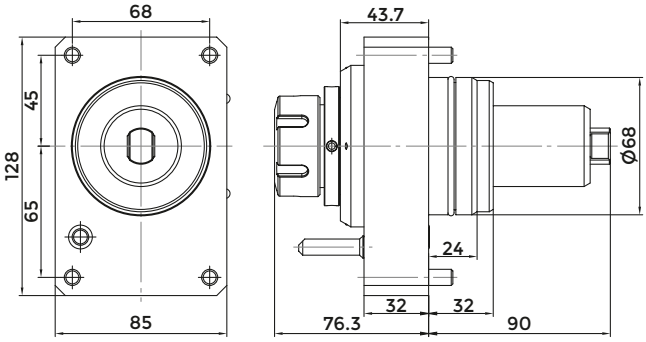

MAZAK BMT68

COD.	ER	MAX SPEED (Rpm)	RATIO	MAX TORQUE (Nm)	INTERNAL COOLING	P Bar
124-06805	ER32	12000	1:1	70	NO	-
124-06806	ER32	12000	1:1	70	YES	20

RADIAL DRILLING AND MILLING HEAD

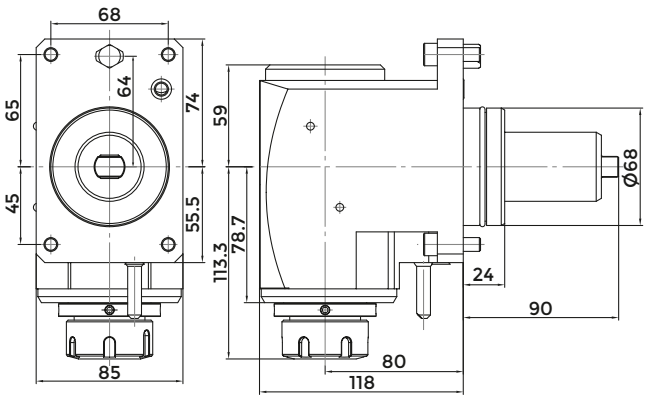

MAZAK BMT68

COD.	ER	MAX SPEED (Rpm)	RATIO	MAX TORQUE (Nm)	INTERNAL COOLING	P Bar
124-06807	ER32	6000	1:1	70	NO	-
124-06808	ER32	6000	1:1	70	YES	20
124-06809	ER32	6000	1:1	70	YES	80

DMG MORI SEIKI / CMZ - CL 200/203 - SL 20/25

SL 203/204/250/253 - SL 254 (MC,SMC)/2500Y - SL 203MC - SL 253MC
ZL 200MC - ZL 250SMC - SL 204SMC - SL 300MC - TBI 520 - TL 20/25
TC 15/20/25/30/35 - TA 15M/Y/MS/MY/YS - TA 20M/Y/MS/MY/YS
TA 25M/Y/MS/MY/YS - TA 30M/Y/MS/MY/YS - TD 15/20/25/30/35/45
TD 55M/Y/MS/MY/YS

Index of machines p. 303

AXIAL DRILLING AND MILLING HEAD

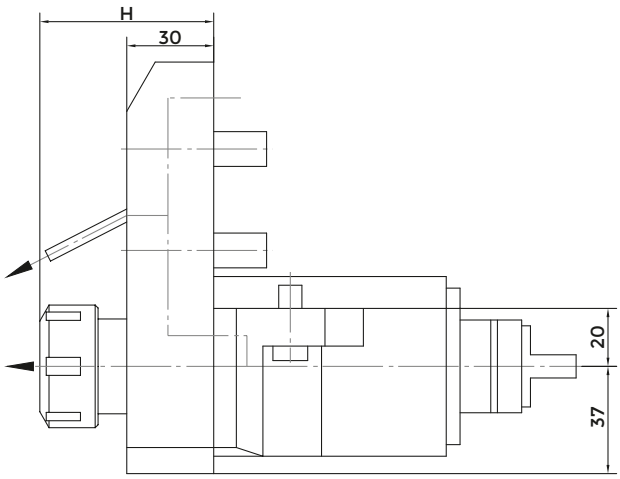

DMG MORI SEIKI CMZ

COD.	ER	H	MAX SPEED (Rpm)	RATIO	MAX TORQUE (Nm)	INTERNAL COOLING	P Bar
124-00001	ER32	55.5-60	6000	1:1	70	NO	-
124-00002	ER32	55.5-60	6000	1:1	70	YES	80

RADIAL DRILLING AND MILLING HEAD

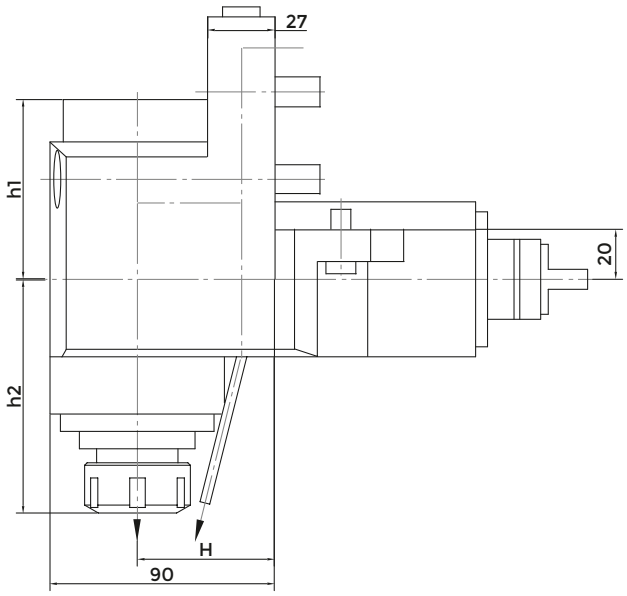

DMG MORI SEIKI CMZ

COD.	ER	H	h1	h2	MAX SPEED (Rpm)	RATIO	MAX TORQUE (Nm)	INTERNAL COOLING	P Bar
124-00003	ER32	55	57	89-93.5	6000	1:1	70	NO	-
124-00004	ER32	55	72	89-93.5	6000	1:1	70	YES	80

DMG MORI SEIKI BMT40 – NZ 1500/2000/3100
NZ/NTZ 1000/2000/3000/3100/3150/3200
NZ/NZX 2000/2500 (16 station turret) - NL/NLX 1500/2000/2500 (20 station turret)
DURATURN 2050/2550 MC - LTX310ECO-BMT

Index of machines p. 303

CONNECTION TURRET DMG MORI SEIKI BMT40

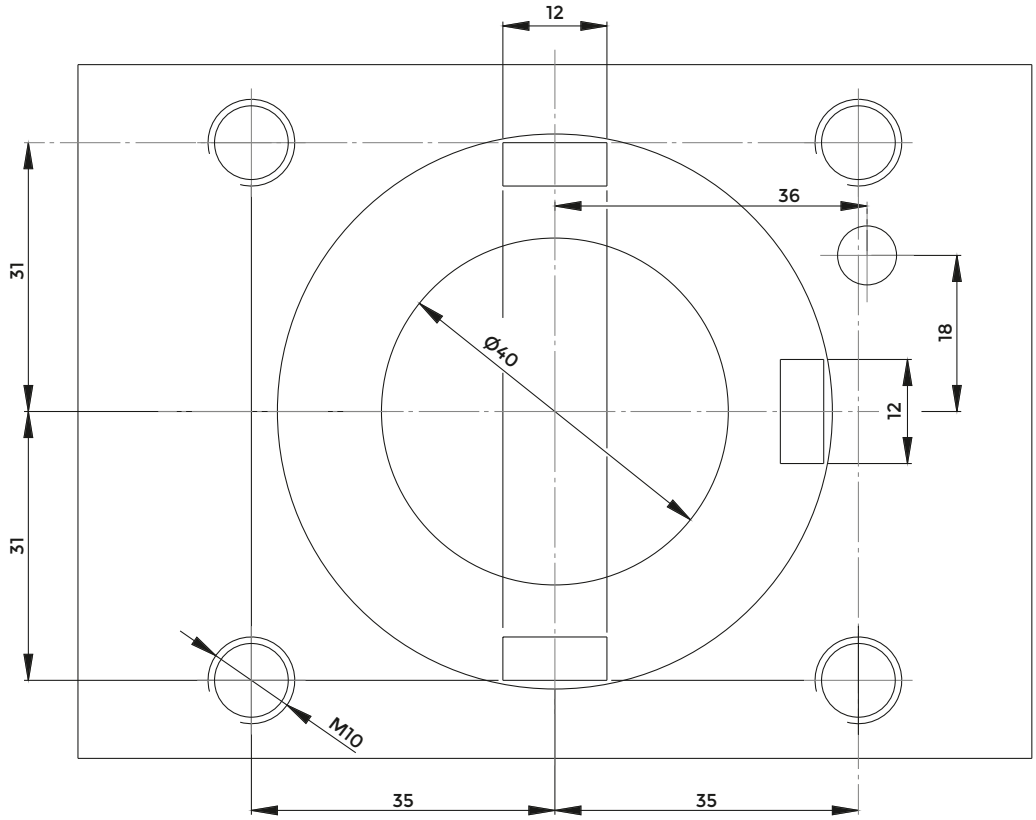

AXIAL DRILLING AND MILLING HEAD

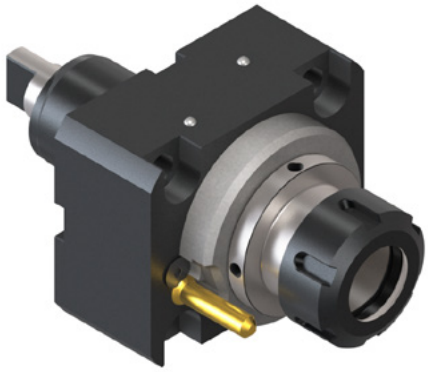

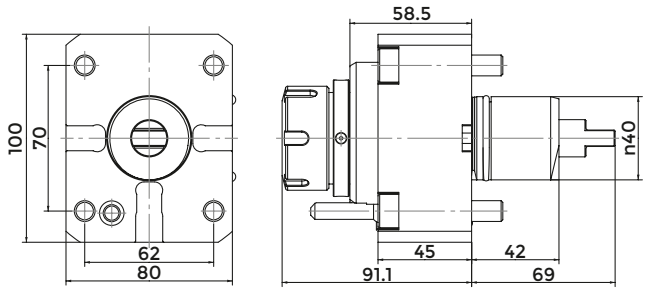

DMG MORI BMT40

COD.	ER	MAX SPEED (Rpm)	RATIO	MAX TORQUE (Nm)	INTERNAL COOLING	P Bar
124-04005	ER32	12000	1:1	50	NO	-
124-04006	ER32	12000	1:1	50	YES	20

RADIAL DRILLING AND MILLING HEAD

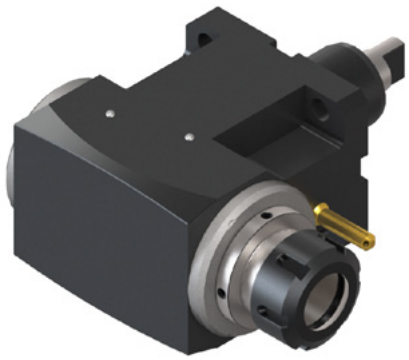

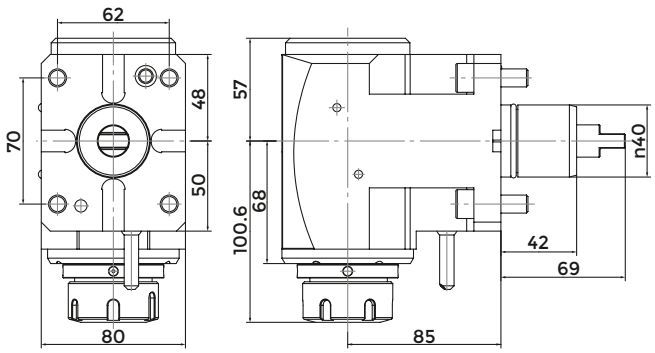

DMG MORI BMT40

COD.	ER	MAX SPEED (Rpm)	RATIO	MAX TORQUE (Nm)	INTERNAL COOLING	P Bar
124-04007	ER32	6000	1:1	50	NO	-
124-04008	ER32	6000	1:1	50	YES	20

MORI SEIKI SEIKI BMT60 - DURATURN 2050/25550MC (16 stazioni)

NLX1500 (12 stazioni) - NLX2000 NLX2500 - NLX3000 - NLX4000 - NL2000 (S)MC 2500 (S)MC - NL3000MC (12 stazioni) - NRX2000MC (10 stazioni) NT3100 - NT3200 NT3250 - NT4200 - NT4250 - NT4300 - NT5400 - NZL2500 - NT4000 - NT5000 NZL 2000/2500 - NZX 2500 (station turret) - NTX 1000/2000/2500/3000 2ND GEN. 10 ST. - (TX2500 BMT60) - TAKISAWA TM-2000 Y2

Index of machines p. 303

CONNECTION TURRET MORI SEIKI BMT60

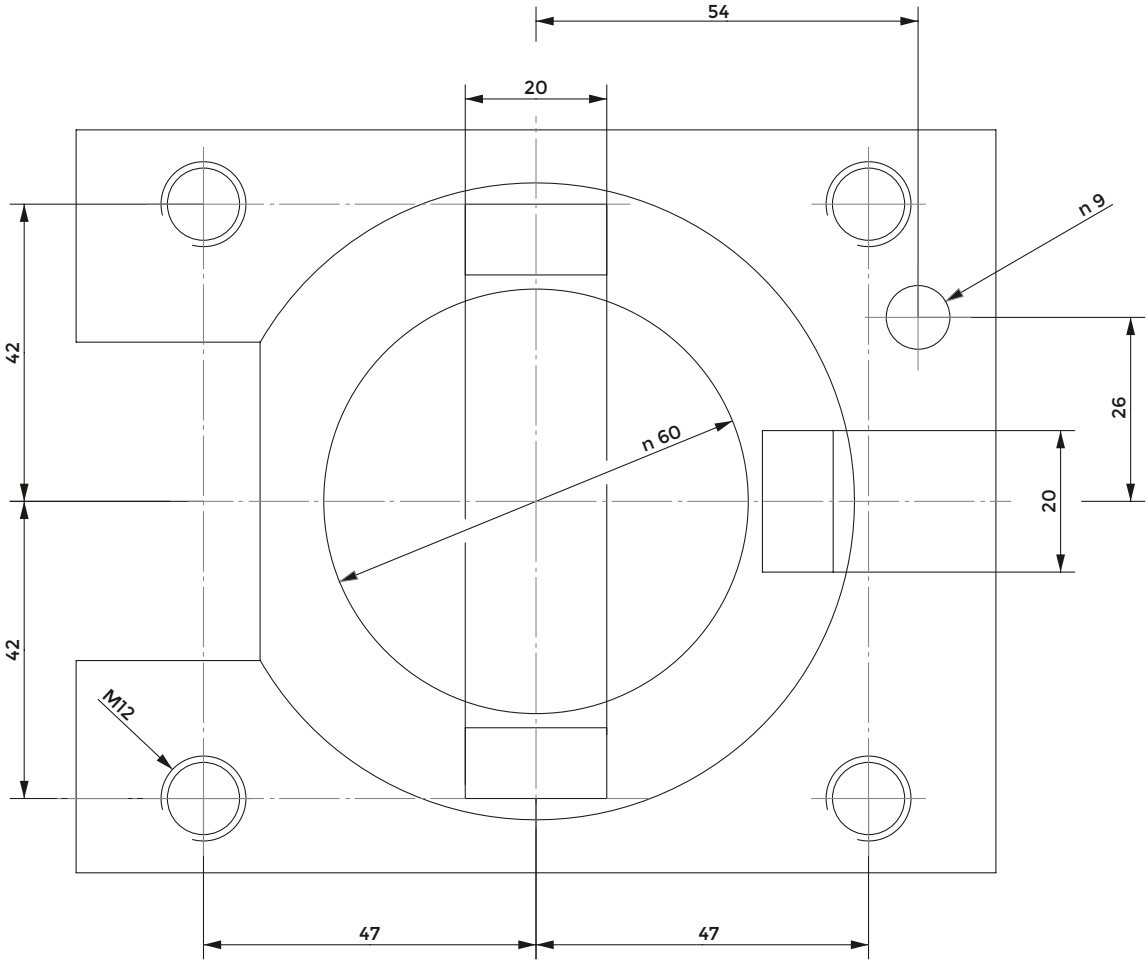

AXIAL DRILLING AND MILLING HEAD

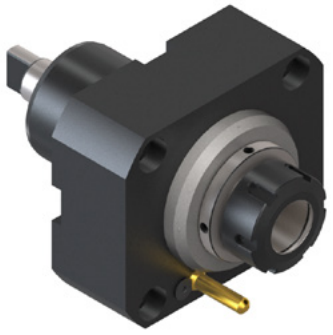

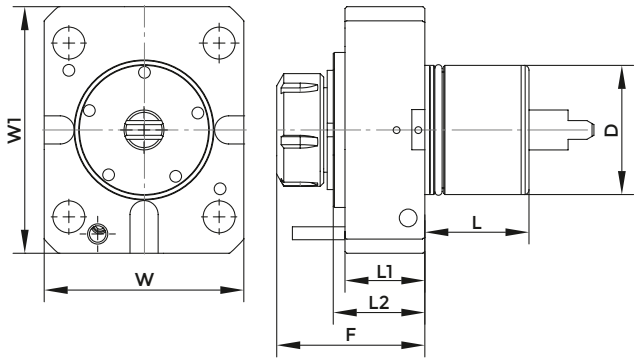

MORI SEIKI BMT60

COD.	ER	D	F	L	L1	L2	W	W1	MAX TORQUE (Nm)	MAX SPEED (Rpm)	RATIO	INTERNAL COOLING	P Bar
124-06001	ER32	60	89	53	48,5	58	108	130	70	6000	1:1	NO	-
124-06003	ER32	60	89	53	48,5	58	108	130	70	6000	1:1	YES	20

RADIAL DRILLING AND MILLING HEAD

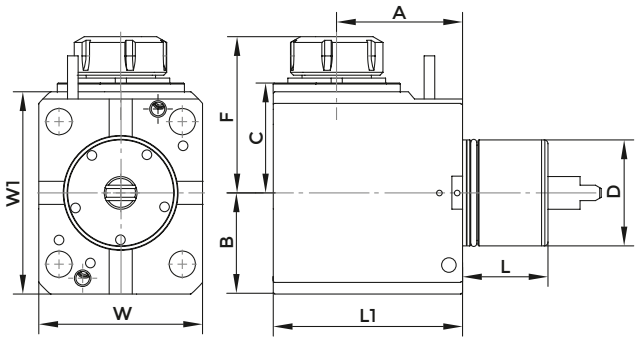

MORI SEIKI BMT60

COD.	ER	D	F	L	L1	A	B	C	W	W1	MAX TORQUE (Nm)	MAX SPEED (Rpm)	RATIO	INTERNAL COOLING	P Bar
124-06002	ER32	60	107	53	128	90	65	78	108	130	70	6000	1:1	NO	-
124-06004	ER32	60	107	53	128	90	65	78	108	130	70	6000	1:1	YES	20

DOUBLE RADIAL DRILLING AND MILLING HEAD WITH INTERNAL NUT

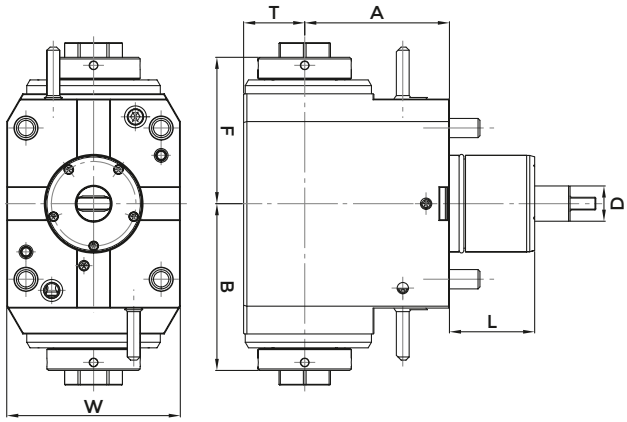

DOUBLE MORI SEIKI

COD.	D	ER	INTERNAL COOLING	DIRECTION	A	B	F	T	W	L	MAX TORQUE (Nm)	MAX SPEED (Rpm)	RATIO	P Bar
124-06603	60	32	NO	DX/SX	90	103.8	91	38	108	53	70	6000	1:1	-

NAKAMURA - TOME - BMT44 - NTY3/SUPER - NTMX/NTMXL
WT100 - MURATA MURATEC MT100 - WY-100II - NTJ100

Index of machines p. 303

CONNECTION TURRET NAKAMURA - TOME - BMT44

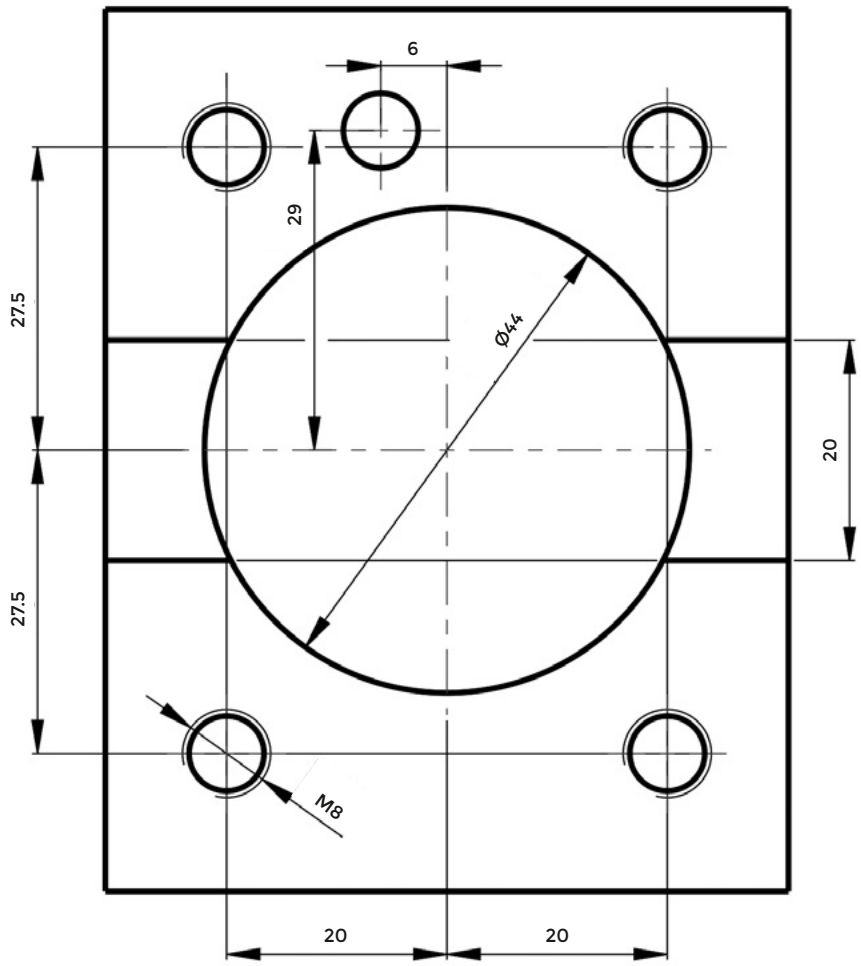

AXIAL DRILLING AND MILLING HEAD

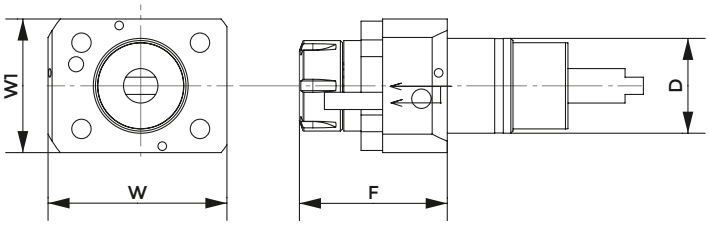

NAKAMURA - TOME

COD.	D	ER	INTERNAL COOLING	F	W	W1	MAX TORQUE (Nm)	MAX SPEED (Rpm)	RATIO	P Bar
124-04402	44	ER25	YES	68.6	83	62	40	6000	1:1	20

RADIAL DRILLING AND MILLING HEAD

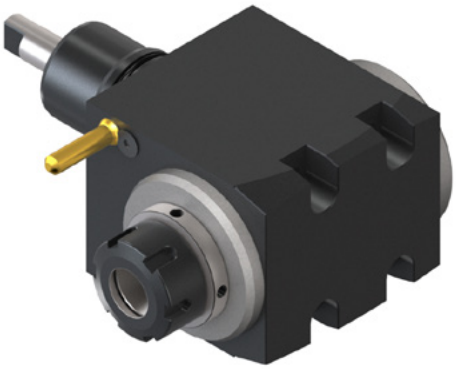

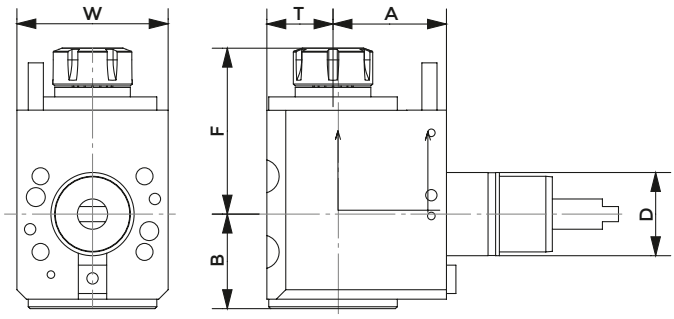

NAKAMURA - TOME

COD.	D	ER	INTERNAL COOLING	DIRECTION	A	B	F	T	W	MAX TORQUE (Nm)	MAX SPEED (Rpm)	RATIO	P Bar
124-04403	44	ER25	NO	DX/SX	60	50,3	87,8	35	80	28	6000	1:1	-
124-04404	44	ER25	YES	DX/SX	60	50,3	87,8	35	80	28	6000	1:1	20
124-04405	44	ER25	NO	DX/SX	75	50	89	35	78	28	6000	1:1	-
124-04406	44	ER25	YES	DX/SX	75	50	89	35	78	28	6000	1:1	80

NAKAMURA - TOME - BMT55 - AS-200 /NTM 3 / NTY3-250

SC-150M - SC-200MY - SC-250M - SuperNTJ - TMC-20 II M/ML - TW-10
TW-20 - WT-20 II M/MY - WT150/200 - WT-250 - WTS-150 - WTW-150/160
WT200 II (M,MY) - WY-250 - CMZ - TX52/66 - SUPER NTJ/NTM3 - SC150/250
TX52 Y3-Y2 QUATTRO-Y2 TW IN - TX66 Y3-Y2 QUATTRO-Y2 TW IN TTL52
TTL66 - TA15-20-25-30M/Y/MS/MY/YS 15ST

Index of machines p. 303

CONNECTION TURRET NAKAMURA - TOME - BMT55

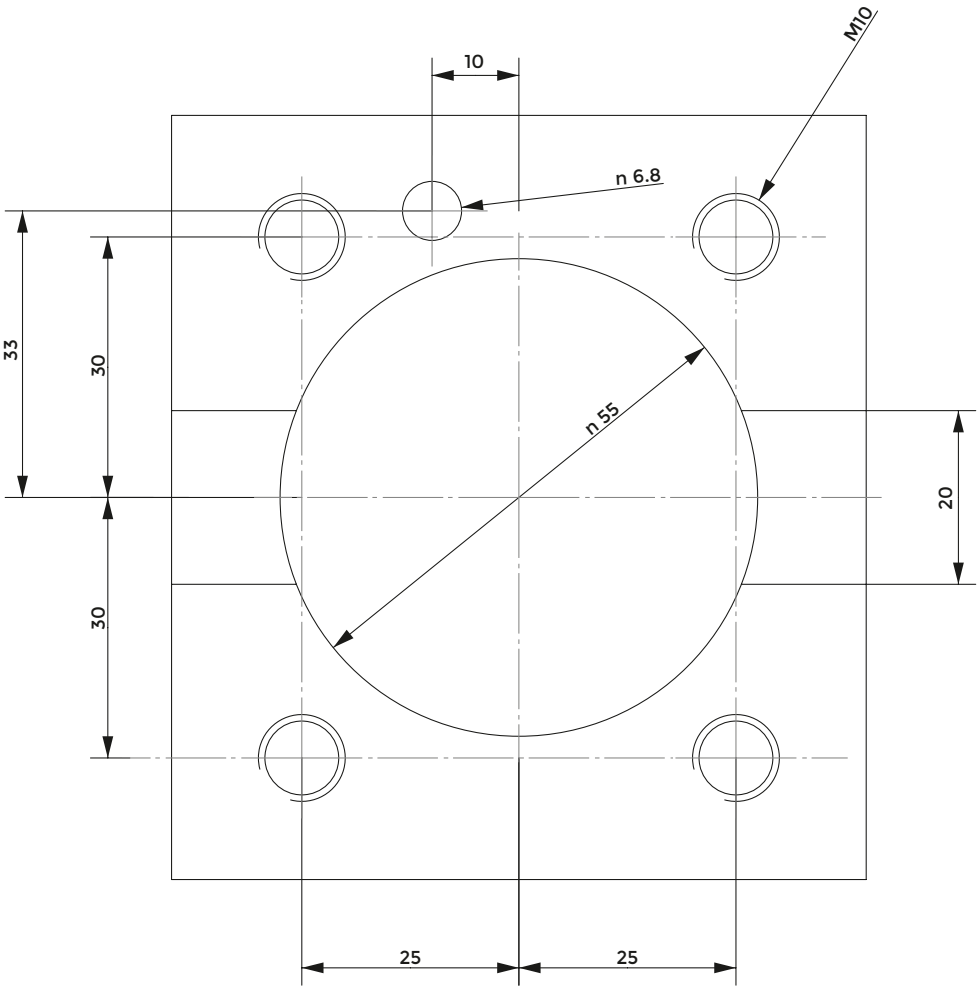

AXIAL DRILLING AND MILLING HEAD

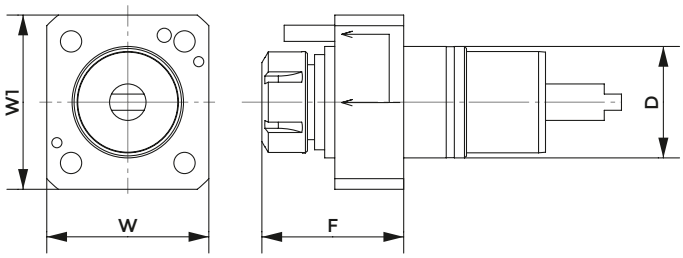

NAKAMURA - TOME

COD.	D	ER	INTERNAL COOLING	F	W	W1	MAX TORQUE (Nm)	MAX SPEED (Rpm)	RATIO	P Bar
124-05507	55	ER25	NO	78	80	86	50	6000	1:1	-
124-05508	55	ER25	YES	78	80	86	50	6000	1:1	20
124-05529	55	ER32	NO	78	80	86	50	6000	1:1	-

RADIAL DRILLING AND MILLING HEAD

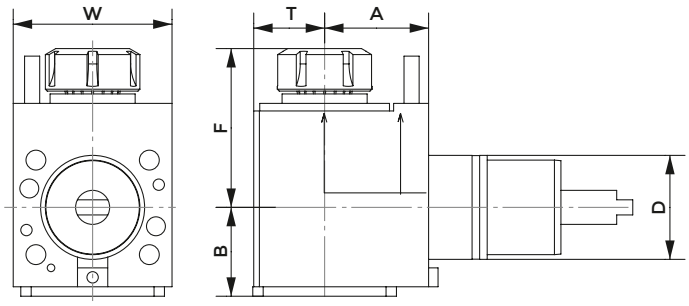

NAKAMURA - TOME

COD.	D	ER	INTERNAL COOLING	DIRECTION	A	B	F	T	W	MAX TORQUE (Nm)	MAX SPEED (Rpm)	RATIO	P Bar
124-05509	55	ER25	NO	DX/SX	55	50,3	74,8	35	84	28	6000	1:1	-
124-05510	55	ER25	YES	DX/SX	55	50,3	74,8	35	84	28	6000	1:1	20
124-05517	55	ER25	YES	DX/SX	55	50,3	74,8	35	84	28	6000	1:1	80

NAKAMURA - TOME - BMT65 - WT300 - SC300 - TW20
TMC-200M - TMC-300M - SUPER NTX - TW20M/MY/MM/MMY/MMYY (12 stations)
TW30M/MY/MM/MMY/MMYY (16 stations)

Index of machines p. 303

CONNECTION TURRET NAKAMURA - TOME - BMT65

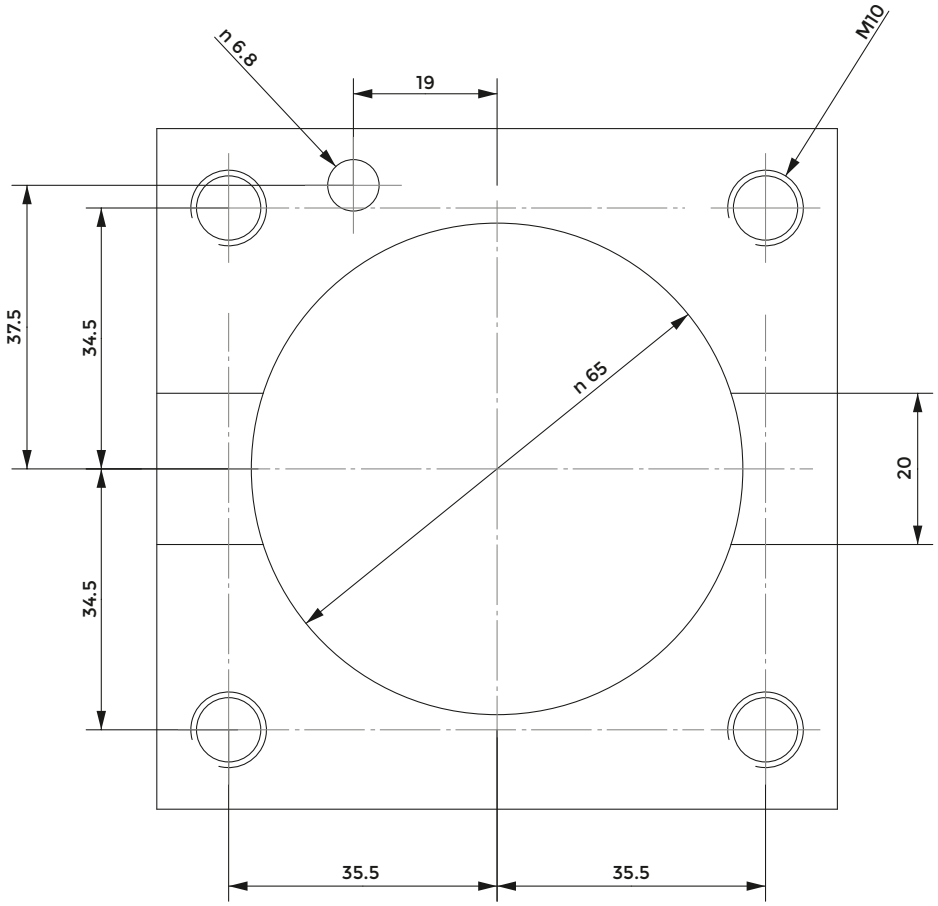

AXIAL DRILLING AND MILLING HEAD

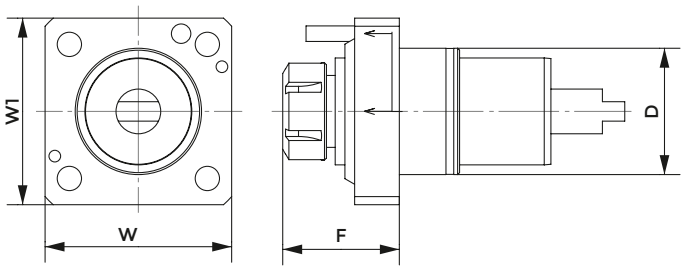

NAKAMURA - TOME

COD.	D	ER	INTERNAL COOLING	F	W	W1	MAX TORQUE (Nm)	MAX SPEED (Rpm)	RATIO	P Bar
124-06504	65	ER32	NO	75	96	96	70	6000	1:1	-
124-06505	65	ER32	YES	75	96	96	70	6000	1:1	20

RADIAL DRILLING AND MILLING HEAD

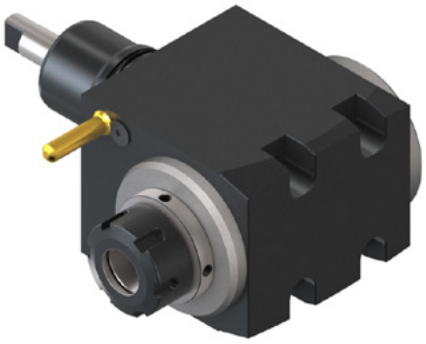

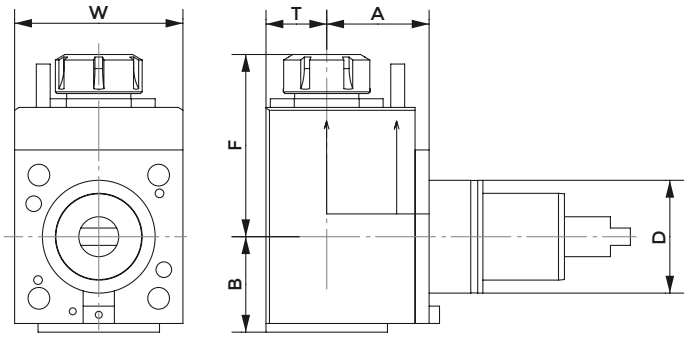

NAKAMURA - TOME

COD.	D	ER	INTERNAL COOLING	DIRECTION	A	B	F	T	W	MAX TORQUE (Nm)	MAX SPEED (Rpm)	RATIO	P Bar
124-06506	65	ER32	NO	DX/SX	65	59	110	38	96	70	6000	1:1	-
124-06507	65	ER32	YES	DX/SX	65	59	110	38	96	70	6000	1:1	20

BMT45

DOOSAN - LYNX 2100MA/220 (LMSA,LMSC) 220 (LSYA,LSYC) - 220 (M,LM) LYNX 220 (MA,LMA,MC,LMC) - 220 (YA,YC,LYA,LYC) 220 (YA,YC,LYA,LYC) - PUMA MX1600 (T,ST)
HARDINGE - BMT45
SMEC - PL1600 (M,CM)

BMT55

DOOSAN - LYNX 300 (M) - PUMA 1500/2000/2500 (M,S,Y) - PUMA 2100 (Y,LY,SY,LSY) - PUMA 2100/2600/3100 M/Y/MS/SY PUMA 230/240/280 (M,LM,S) - PUMA GT2100M - PUMA MX2100 (ST/LST) PUMA TL2000/2500 (M,LM)
HARDINGE - BMT55
HWACHEON - CUTEX-160
SMEC/SAMSUNG - SL 20MC
HYUNDAI WIA - SKT-180TTSY
VICTOR - VTURN-A16/A20 (YSCM)

CONNECTION TURRET BMT45

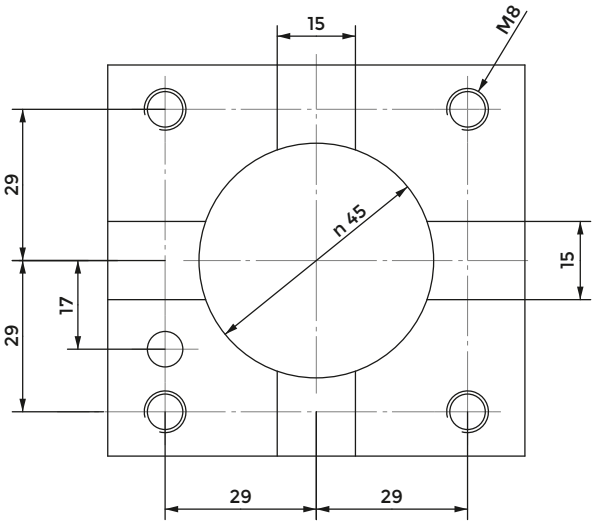

CONNECTION TURRET BMT55

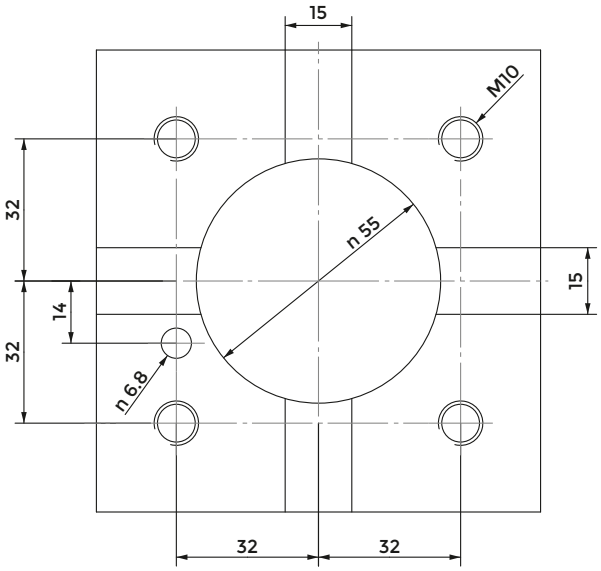

BMT65

DOOSAN - PUMA 2100/2600 (M,LM,MS,LMS) - PUMA 2100/2600 (Y,LY,SY,LSY) - PUMA 300 (M,MS,MB,MC) - PUMA 3100 (M,LM,LY,XLM, XLY,ULM,ULY) - PUMA MX2000/2500 - PUMA MX2600 (T,ST) - PUMA TT2500 (MS/SY) - PUMA V400 (M) - PUMA VT450 (M,SP)
HWACHEON - CUTEX-240 - HI-TECH200/T2-Series HI-TECH300/400 - VT-450
HYUNDAI WIA - L2100SY - SKT-200/250TTSY SKT-250/300 (L,M) - SKT-250/300 (MS)
MAXSIN - BMT65
SMEC/SAMSUNG - SL25 - SL35
TONGTAI - TMT2000
VICTOR - VTURN-A26 (YSCM)

BMT75

DOOSAN - PUMA 400/480 (M,LM,XLM) - 500 (M) - V550 (M) - VT750 (TM, 2SP)
SAMSUNG - PL 45LM - HYUNDAI WIA - LV800RM - SKT400M/MA/MC/LMC
HYUNDAI WIA - LV800RM - SKT400M/MA/MC/LMC
HWACHEON - HI-TECH 550/700/7026 - VT-550

CONNECTION TURRET BMT65

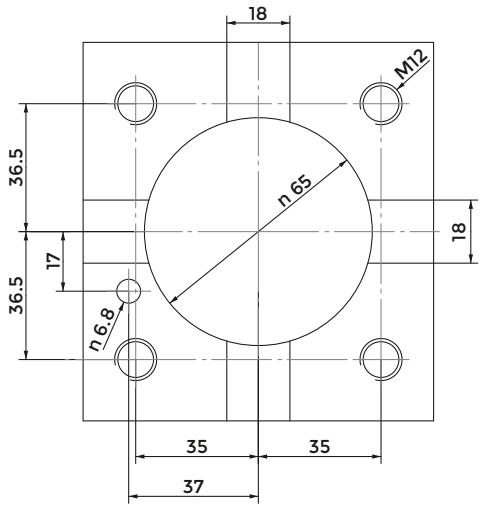

CONNECTION TURRET BMT75

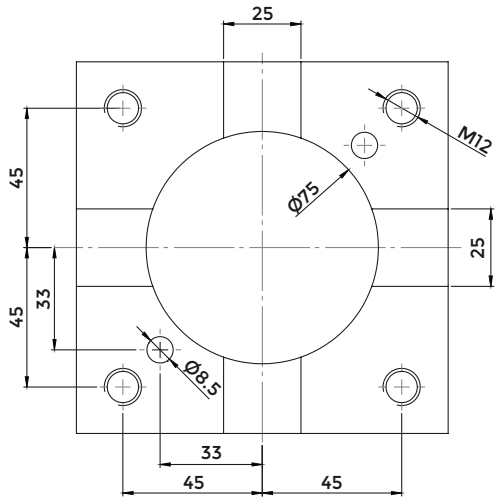

AXIAL DRILLING AND MILLING HEAD

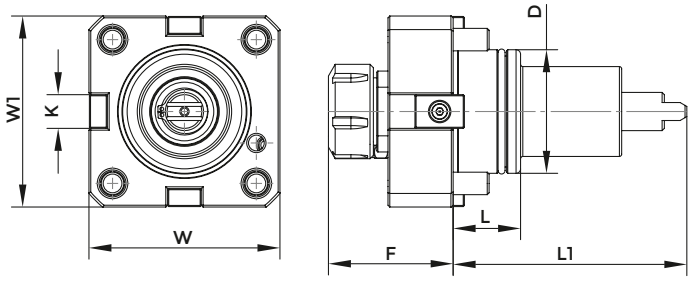

BMT

COD.	BMT	ER	D	F	K	L	L1	W	W1	MAX SPEED (Rpm)	RATIO	MAX TORQUE (Nm)	INTERNAL COOLING	P Bar
124-04501	45	ER25	45	67,6	15	40	84	78,5	75	6000	1:1	50	NO	-
124-04502	45	ER25	45	67,6	15	40	84	78,5	75	6000	1:1	50	YES	20
124-05501	55	ER25	55	71	15	30	104	85	85	6000	1:1	50	NO	-
124-06509	55	ER25	55	71	15	30	104	85	85	6000	1:1	50	YES	20
124-06518	55	ER32	55	71	15	30	104	85	85	6000	1:1	50	YES	20
124-05525	55	ER32	55	73	15	30	104	87	85	6000	1:1	50	NO	-
124-06501	65	ER32	65	75	18	32	112	94	94	6000	1:1	70	NO	-
124-06508	65	ER32	65	75	18	32	112	94	94	6000	1:1	70	YES	20
124-07506	75	ER32	75	67	25	43	110	112	112	6000	1:1	80	NO	-
124-07507	75	ER40	75	67	25	43	110	112	112	6000	1:1	80	NO	-

RADIAL DRILLING AND MILLING HEAD

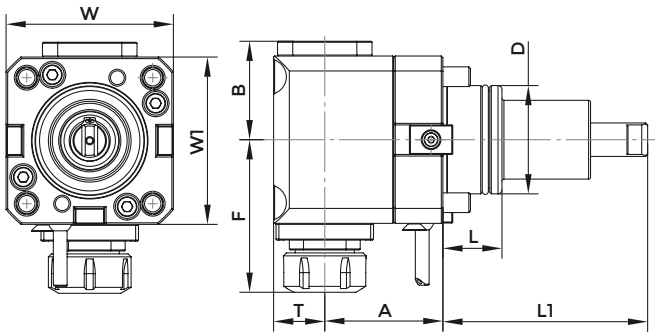

BMT

COD.	BMT	ER	D	A	B	F	L	L1	T	W	W1	MAX SPEED (Rpm)	RATIO	MAX TORQUE (Nm)	INTERNAL COOLING	P Bar
124-04503	45	ER25	45	65	57	97,6	40	84	36,5	75	83	6000	1:1	50	NO	-
124-04504	45	ER25	45	65	57	97,6	40	84	36,5	75	83	6000	1:1	50	YES	20
124-04505	45	ER25	45	90	57	97,6	40	84	36,5	75	83	6000	1:1	50	NO	-
124-05502	55	ER25	55	70	57	98	30	104	36,5	85	98	6000	1:1	50	NO	-
124-06510	55	ER25	55	70	57	98	30	104	36,5	85	98	6000	1:1	50	YES	20
124-05511	55	ER25	55	85	57	98	30	104	36.5	85	98	6000	1:1	50	NO	-
124-05512	55	ER25	55	85	57	98	30	104	36.5	85	98	6000	1:1	50	YES	20
124-06520	55	ER25	55	85	57	98	30	104	36.5	85	98	6000	1:1	50	YES	80
124-05513	55	ER32	55	85	57	101	30	104	36.5	85	98	6000	1:1	50	NO	-
124-05514	55	ER32	55	85	57	101	30	104	36.5	85	98	6000	1:1	50	YES	20
124-05526	55	ER32	55	70	57	101	30	104	36,5	85	108	6000	1:1	50	NO	-
124-05527	55	ER32	55	70	57	101	30	104	36,5	85	108	6000	1:1	50	YES	20
124-05528	55	ER32	55	85	68	101	30	104	36,5	85	108	6000	1:1	50	YES	80
124-06502	65	ER32	65	72	59	111	32	112	38	94	100	6000	1:1	70	NO	-
124-06512	65	ER32	65	72	59	111	32	112	38	94	100	6000	1:1	70	YES	20
124-06521	65	ER32	65	72	59	111	32	112	38	94	100	6000	1:1	70	YES	80
124-06513	65	ER32	65	100	59	111	32	112	38	94	100	6000	1:1	70	NO	-
124-06514	65	ER32	65	100	59	111	32	112	38	94	100	6000	1:1	70	YES	20
124-07508	75	ER32	75	90	76	106	43	110	44	112	110	6000	1:1	80	NO	-
124-07509	75	ER32	75	90	76	106	43	110	44	112	110	6000	1:1	80	YES	20
124-07510	75	ER32	75	110	76	106	43	110	44	112	110	6000	1:1	80	NO	-
124-07511	75	ER32	75	110	76	106	43	110	44	112	110	6000	1:1	80	YES	20
124-07512	75	ER40	75	90	76	112	43	110	44	112	110	6000	1:1	80	NO	-
124-07513	75	ER40	75	90	76	112	43	110	44	112	110	6000	1:1	80	YES	20
124-07514	75	ER40	75	110	76	112	43	110	44	112	110	6000	1:1	80	NO	-
124-07515	75	ER40	75	110	76	112	43	110	44	112	110	6000	1:1	80	YES	20

DOUBLE RADIAL DRILLING AND MILLING HEAD WITH INTERNAL NUT

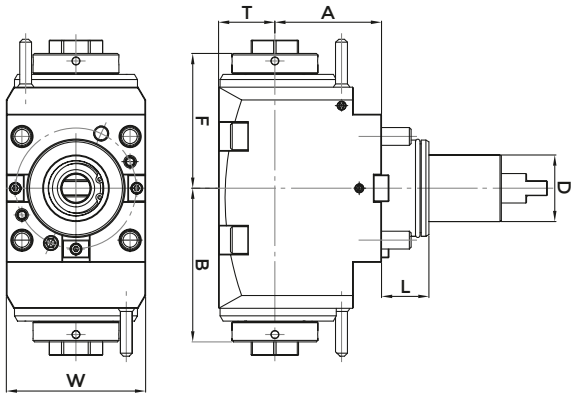

DOUBLE BMT

COD.	D	ER	INTERNAL COOLING	DIRECTION	A	B	F	T	W	L	MAX TORQUE (Nm)	MAX SPEED (Rpm)	RATIO	P Bar
124-06605	65	32	NO	DX/SX	72	104	91	38	94	32	70	6000	1:1	-
124-06606	65	32	YES	DX/SX	72	104	91	38	94	32	70	6000	1:1	20

DOOSAN - BMT

Index of machines p. 303

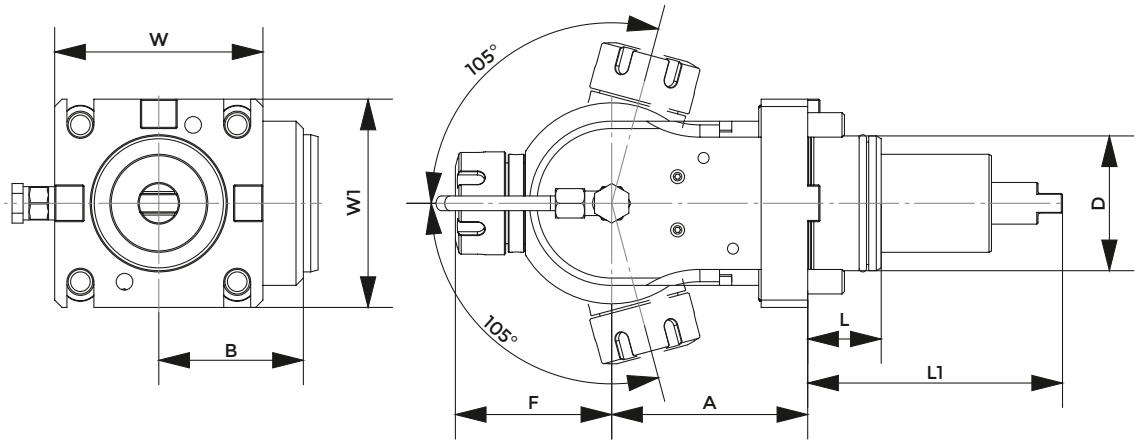

AXIAL - RADIAL DRILLING AND MILLING HEAD

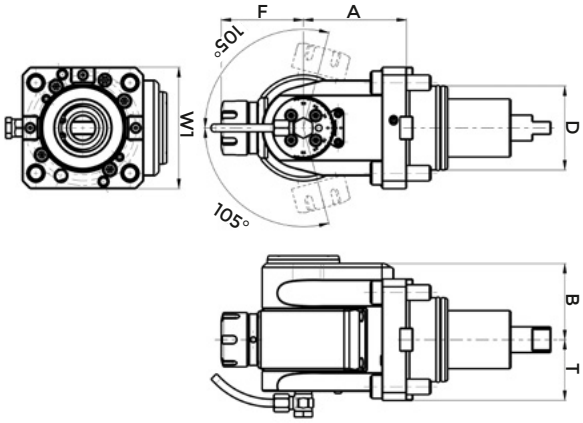

BMT

COD.	BMT	ER	D	A	B	T	F	L	L1	W	W1	MAX SPEED (Rpm)	RATIO	MAX TORQUE (Nm)	INTERNAL COOLING	P Bar
124-04506	45	ER25	45	80	59	40	65	40	84	80	80	6000	1:1	16	NO	-
124-04507	45	ER25	45	80	59	40	65	40	84	80	80	6000	1:1	16	YES	20
124-05515	55	ER25	55	80	59	42,5	63,8	30	104	85	85	6000	1:1	16	NO	-
124-05516	55	ER25	55	80	59	42,5	63,8	30	104	85	85	6000	1:1	16	YES	20

AXIAL DRILLING AND MILLING HEAD INDEX/TRAUB

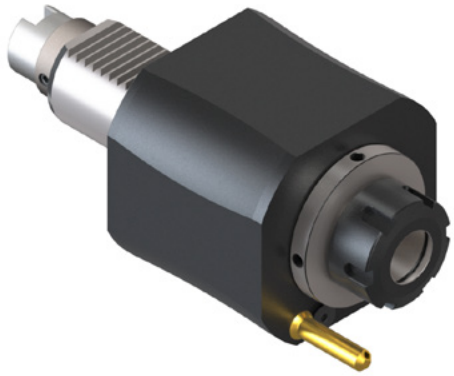

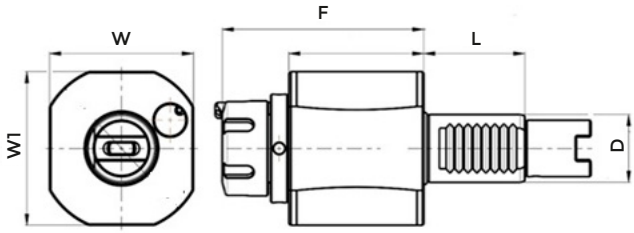

INDEX /TRAUB

COD.	D	ER	INTERNAL COOLING	F	L	W	W1	MAX TORQUE (Nm)	MAX SPEED (Rpm)	RATIO	P Bar
116-54061	30	ER25	NO	90	45	64	68	28	6000	1:1	-
116-54062	30	ER25	YES	90	45	64	68	28	6000	1:1	20
116-54063	40	ER32	NO	106	53	80	86	50	6000	1:1	-
116-54064	40	ER32	YES	106	53	80	86	50	6000	1:1	20

READY, ALWAYS.

Turning toolholders

BIGLIA

Model:
- B301
- B445
- B470
- B501 (Y/S)
- B510
- B545
- B550
- B565
- B650
- B658
- B1200
- B446
- B465
- B745
- B765
- B750
- B1250 (16 ST.)

Connection: 65x63 chiavetta / key 15 p. 363

CMZ

Model:
- TL15T/M/TM/S/MS
- TB46 M/CM
- TB67 M/CM

Connection: 30x70 chiavetta / key 25 p. 369

Model:
- TBI520
- TL20/25
- TC15/20/25/30/35
- TA15 (M/Y/MS/MY/YS)
- TA20 (M/Y/MS/MY/YS)
- TA25 (M/Y/MS/MY/YS)
- TA30 (M/Y/MS/MY/YS)
- TD15/20/25/30/35/45
- TD55 (M/Y/MS/MY/YS)

Connection: 35x76 chiavetta / key 25 p. 394

Model:
- TL15

Connection: 30x64 chiavetta / key 20 p. 403

Model:
- TX52/66/SUPERNTJ
- NTM3 / SC150/250
- TX52 Y3-Y2 QUATTRO-Y2 TW IN
- TX66 Y3-Y2 QUATTRO-Y2 TW IN
- TTL 52 / TTL 66
- TA15-20-25-30 (M/Y/MS/MY/YS) (15 ST.)

Connection: 50x60 chiavetta / key 20 p. 436

DMG MORI

VDI30:
- CTX310/410 V4/V6 (OPTION)
- CTX420 V4/V6 (OPTION)
- CTX ALPHA 300 V4
- CTX ALPHA 500 V4/V6
- CTX BETA 500/800/1250 V4/V6 (OPTION)
- TWIN 42/65/102
- SPRINT 65/50

Connection: VDI30 p. 374

VDI40:
- CTX410 V4/V6 (OPTION)
- CTX420 V4/V6
- CTXBETA 500/800/1250 V4/V6
- TWIN42/65/102 RG2
- GMX250/300/400/500
- SPRINT65 (OPTION)

Connection: VDI40 p. 377

BMT40:
- NZ 1500/2000/3100
- NZ/NTZ 1000 / 2000 / 3000 / 3100 / 3150 / 3200
- NZ/NZX 2000 / 2500 (16 St. turret)
- NL/NLX 1500 / 2000 / 2500 (20 St. turret)
- DURATURN 2050/2550 MC
- LTX310ECO-BMT

Connection: 70x62 chiavetta / key 12 p. 381

BMT60:
- NLX 1500 / 2000 / 2500 / 3000 / 4000 (12 ST.)
- NL1500 (12 ST.) / 2000 (S)MC / 2500 (S)MC / 3000MC (12 ST.)
- NT 3250 / 4000 / 4200 / 4250 / 4300 / 5000 / 5400
- NZL 2000/2500
- NTX 2000 / 2500 / 3000
- 2ND GEN. 10ST.
- TX2500

Connection: 94x84 chiavetta / key 20 p. 386

Model:
- CL 200/203
- DL 200/250 MC
- SL 20/25
- SL 200/203/204/250/253
- SL 254 (MC/SMC)
- 2500Y
- SL 203MC
- SL 253 (MC/SMC)
- SL 204SMC
- SL 300MC
- SL 2500 Y
- ZL 200MC
- ZL 250 (MC/SMC)
- DURATURN 2030/2050/2550

Connection: 35x76 chiavetta / key 25 p. 394

Model:
- SL150
- SL153
- ZL150
- CL150
- SL154
- SL153MC
- ZL150MC
- SL154MC

Connection: 30x64 chiavetta / key 20 p. 403

DOOSAN - DN SOLUTIONS

Model:
- PUMA 230M/MS
- PUMA 240M/MS

Connection: 64x64 chiavetta / key 15 p. 450

Model:
- PUMA 230S
- PUMA 240S
- PUMA LYNX210

Connection: 45x72 chiavetta / key 20 p. 454

BMT45:
- LYNX 2100LYA/LYB (24 POSITION INDEX)
- LYNX 2100MA
- LYNX 220 LMSA / LMSC / LSYA / LSYC / M / LM / MA / LMA / MC / LMC / YA / YC / LYA / LYC
- PUMA MX1600 T/ST

Connection: 58x58 chiavetta / key 15 p. 458

BMT55:
- LYNX 300M
- LYNX 2600 Y/SY (12 ST.)
- MX1600 ST (12 ST.)
- SMX2100 ST (12 ST.)
- PUMA 1500/2000/2500 (M/S/Y)
- PUMA 2100 (Y/LY/SY/LSY)
- PUMA 2100/2600/3100 (M/Y/MS/SY)
- PUMA 230/240/280 (M/LM/S)
- PUMA GT2100M
- PUMA H250TM
- PUMA MX2100 (ST/LST)
- PUMA TL2000/2500 (M/LM)
- PUMA TT1500/1800 (MS/SY)
- PUMA TT 2100 (SY/Y)
- PUMA DNT 2100/2600 M

Connection: 64x64 chiavetta / key 15 p. 464

BMT65:
- PUMA 2100/2600 (M/LM/MS/LMS)
- PUMA 2100/2600 (Y/LY/SY/LSY)
- PUMA 300 (M/MS/MB/MC)
- PUMA 3100 (M/LM/LY/XLM/XLY/ULM/ULY)
- PUMA MX2000/2500
- PUMA MX2600 (T/ST)
- PUMA TT2500 (MS/SY)
- PUMA V400 (M)
- PUMA VT450 (M/2SP)
- PUMA TT2000
- PUMA INVERTURN 3000 M
- PUMA DNT 2100/2600 M
- PUMA GT 3100 (M/SMX)
- PUMA 2600/3100 ST

Connection: 70X73 chiavetta / key 18 p. 472

BMT75:
- 400/480 (M/LM/XLM)
- 500 (M)
- V550(M)
- VT750 (TM/2SP)
- PUMA 4100/5100 (M/Y)
- PUMA V8300 M

Connection: 90X90 chiavetta / key 25 p. 480

BMT85:
- 600M/LM
- 700M/LM
- 800M/LM
- VT900M/TM
- VT1100M

Connection: 100X100 chiavetta / key 25 p. 486

Turning toolholders

GOODWAY

BMT 60:
- G4/G5 200 - 2600 / 280 / 3000 / 3300 / 3600
- GS2000 SERIES
- GS3000 SERIES
- GS4000 SERIES

Connection: 94x84 chiavetta / key 20 p. 386

Model:
- GS 200/260/280
- GA 2000/2600/2800
- GA 3000/3300/3600

Connection: 35X76 chiavetta / key 25 p. 394

HAAS

Model:
- ST20/25/28/30/35
- SL20/30
- DS30

Connection: 45X80 chiavetta / key 20 p. 414

BMT65:
- DS30 (Y)
- ST20Y/25Y/30Y/35Y
- SB28Y

Connection: 70X73 chiavetta / key 18 p. 472

HARDINGE

BMT45:
- TALENT 42/51 (12/16ST.)

Connection: 58X58 chiavetta / key 15 p. 458

BMT55:
- T-51/65 SUPER PRECISION H51

Connection: 64X64 chiavetta / key 15 p. 464

HYUNDAI WIA

BMT55:
- L230 LMSA
- SKT160
- SKT180 (TTMS/TTSY)
- LM 1600/1800 (TTSY)

Connection: 64X64 chiavetta / key 15 p. 464

BMT65:
- L2100SY
- SKT200/250TTSY
- SKT250/300 (L/M)
- SKT250/300 (MS)
- L300 (M/MS)
- LM 2000/2500 (TTM/TTMS/TTSY)

Connection: 70X73 chiavetta / key 18 p. 472

BMT75:
- LV800 (RM/SKT)
- V80 (R/RM)
- SKT400 (M/MA/MC/LMC)

Connection: 90X90 chiavetta / key 25 p. 480

HWACHELON

BMT55:
- CUTEX-160/240/T2

Connection: 64x64 chiavetta / key 15 p. 464

BMT65:
- CUTEX240
- HI-TECH200/T2-SERIES
- HI-TECH300/400
- VT450

Connection: 70X73 chiavetta / key 18 p. 472

BMT75:
- HI-TECH 550/700/7026
- VT550

Connection: 90x90 chiavetta / key 25 p. 480

MAZAK

Model:
- NEXUS SQT 100/150

Connection: 45x76 chiavetta / key 38 p. 491

Model:
- NEXUS SQT 200/250

Connection: 60X94 chiavetta / key 38 p. 494

VDI40:
- SQT 15/18 (M/MS) (12 ST.)
- SQT 200/250 (M/MS) (12 ST.)
- QTN 200/250 (M/MB/MS/MY/MSY) (12 ST.)

Connection: VDI40 MAZAK p. 498

BMT68:
- QTC/QTU 100/350 (M/MY/MS/MSY)
- QT/QTS 100/250 (M/MY/MS/MSY)
- QT 200/250 (M/MY/MS/MSY) (16 ST.)

Connection: 110X68 p. 499

MIYANO

Model:
- ABX51 (SY/TH2/TH3)
- ABX64 (SY/TH2/TH3)
- BND51 (C/S/SY)
- BNE34/51 (S/SY/MSY)
- BNE51/65 (MYY)
- BNJ34/42/51 (S/SY)
- BNX42 SY
- BNX51 SY

Connection: 30X70 chiavetta / key 25 p. 369

MURATEC

BMT44:
- MT100
- MT1051 (15ST.)
- MT1065 (15ST.)

Connection: 40X55 chiavetta / key 20 p. 431

Model:
- MW120 (8 ST.)
- MS60 (8 ST.)
- MJ60 (8 ST.)

Connection: 60X60 Ø18 p. 504

Model:
- MW200 (10 ST.)
- MW180 (10 ST.)
- MS100 (10 ST.)
- MS90 (10 ST.)
- MJ100 (10 ST.)

Connection: 110X76 Ø18 p. 505

NAKAMURA TOME

BMT44:
- NTY3
- NTY 100/100V (12 ST.)
- SUPER NTMX/NTMXL
- WT100
- WY100
- WY100V (12 ST.)
- WY100II
- NTJ100
- MX5
- MX100
- SC100
- SC100X2

Connection: 40X55 chiavetta / key 20 p. 431

BMT55:
- AS200
- NTM3
- NTY3 (150/150V/250)
- SC150M
- SC200MY
- SC250M
- SUPERNTJ/NTM3/NTJX
- TMC20 II M/ML
- TW10
- TW20
- WT20 II M/MY
- WT150/200/250
- WTS150
- WTW150/160
- WT200 II (M/MY)
- WY250
- SUPER NTJ/NTM3
- SC150/250

Connection: 50X60 chiavetta / key 20 p. 437

BMT65:
- WT300
- SC300
- TW20
- TMC200M
- TMC300M
- SUPER NTX
- TW20 M/MY/MM /MMY/MMYY (12 ST.)
- TW30 M/MY/MM /MMY/MMYY (16 ST.)

Connection: 69X71 chiavetta / key 20 p. 446

Turning toolholders

OKUMA

Model:
- LB15
- LB25
- LB15II
- LB300

Connection: 45X80 chiavetta / key 20 p. 414

VDI30:
- LT10M
- LT200M
- LB10

Connection: VDI30 p. 409

VDI40:
- LT15M
- LT300M
- MT250
- LB300
- LB300M
- LV300

Connection: VDI40 p. 412

BMT60:
- LB2000 EX (M)
- LB2500 EX (M)
- LB3000 EX (M/MY)
- LT2000 EX
- LT3000 EX
- LB3000 EX (MW/MYW)
- LU2000 EX
- LU2500 EX
- LU3000 EX (M/MW/MY)
- GENOS L300 (MY/MW/MYW)

Connection: 65X73 p. 419

BMT60:
- LB4000 EX (M/MY)

Connection: 80X78 p. 426

SMEC SAMSUNG

BMT45:
- NS2100SY
- PL1600M/CM
- PL2000M
- SL15M

Connection: 58X58 chiavetta / key 15 p. 458

BMT55:
- NS2600SY
- PL240 LM
- PL250 VM
- SL1500 (M/SY/Y)
- SL2000 (M/SY/Y)

Connection: 64X64 chiavetta / key 15 p. 464

BMT65:
- SL25
- SL35
- PL 20/25M
- PL 35LM
- PL 2000/2500Y

Connection: 70X73 chiavetta / key 18 p. 472

BMT75:
- PL 45LM

Connection: 90X90 chiavetta / key 25 p. 480

VICTOR

BMT55:
- VTURN-A16/A20 (YSCM)

Connection: 64x64 chiavetta / key 15 p. 464

BMT65:
- VTURN-A26 (YSCM)

Connection: 70X73 chiavetta / key 18 p. 472

BIGLIA

Index of machines p. 360

FACE AND O.D. CUTTING HOLDER

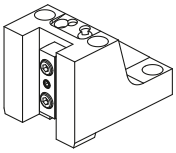

128-41524 - 20x20 mm
128-41525 - 25x25 mm

FACE AND O.D. CUTTING HOLDER

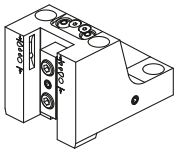

128-41525-IC - 25x25 mm
IC-TOOLTEK

FACE AND O.D. CUTTING HOLDER

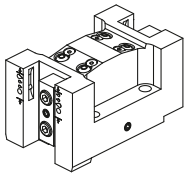

128-41527-IC - 20x20 mm
IC-TOOLTEK

FACE AND O.D. CUTTING HOLDER

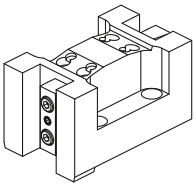

128-41527 - 20x20 mm

QUALIFIED TOOL

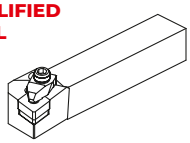

CUT-OFF HOLDER

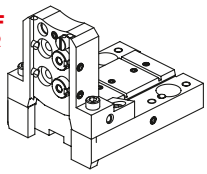

128-11566 - 26 mm
128-11567 - 32 mm

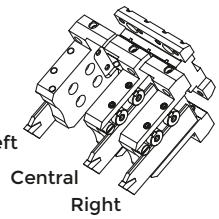

CUT-OFF TOOL

FACE AND O.D. CUTTING HOLDER

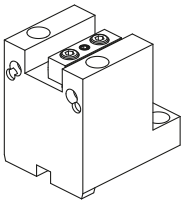

128-31515 - 20x20 mm

ACCESSORIES

TOOLHOLDER FOR BORING BAR

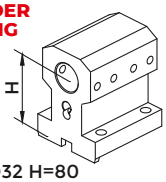

128-21538 D32 H=80
128-21540 D32 H=100
128-21548 D40 H=80

COMBI TOOLHOLDER WITH INTERNAL COOLANT FOR BORING BAR AND INSERT DRILL

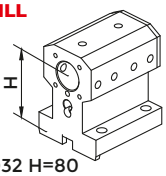

128-21539 D32 H=80
128-21541 D32 H=100
128-21549 D40 H=80

COMBI TOOLHOLDER WITH INTERNAL COOLANT FOR BORING BAR AND INSERT DRILL

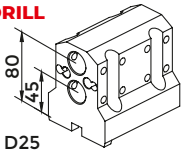

128-21542 D25

BORING BAR SLEEVE
p. 724

	D32	D40
	1376 <MT1> 1377 <MT2>	3245 <MT2> 1232 <MT3>
	5316 (Ø8) 5317 (Ø10) 5318 (Ø12) 5319 (Ø16) 5320 (Ø20)	5322 (Ø8) 5323 (Ø10) 5324 (Ø12) 5325 (Ø16) 5326 (Ø20) 5327 (Ø25)
	5333 (Ø25)	5334 (Ø32)
	9607 (Ø8) 9608 (Ø10) 9609 (Ø12)	9615 (Ø8) 9616 (Ø10) 9617 (Ø12)
	9611 (Ø16) 9613 (Ø20) 9614 (Ø25)	9619 (Ø16) 9621 (Ø20) 9622 (Ø25) 9623 (Ø32)
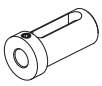	8764 (Ø16) 8766 (Ø20) 8767 (Ø25)	8768 (Ø16) 8770 (Ø20) 8771 (Ø25) 8772 (Ø32)

FAST-IN DRIVEN TOOLS

FAST-IN p. 506
DRIVEN TOOLS p. 302

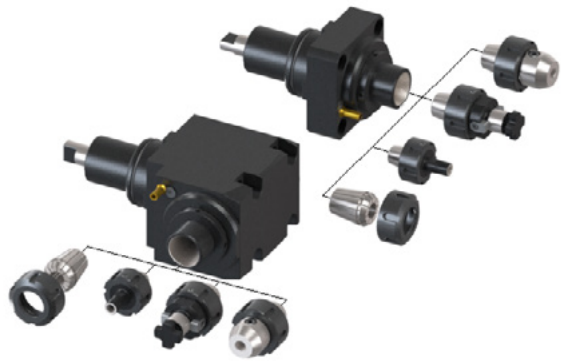

PROTECTION COVER

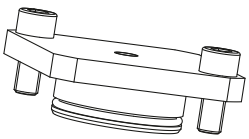

137-00244

CONTROL PIN
p. 758

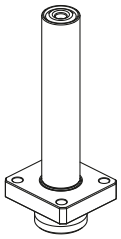

137-00209

CONNECTION

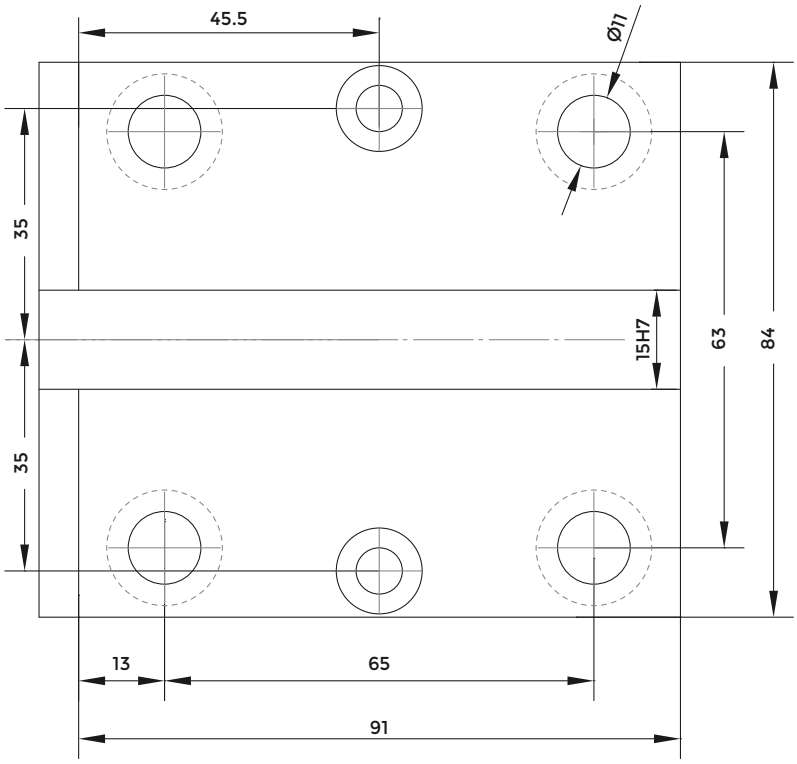

RADIAL TOOLHOLDER

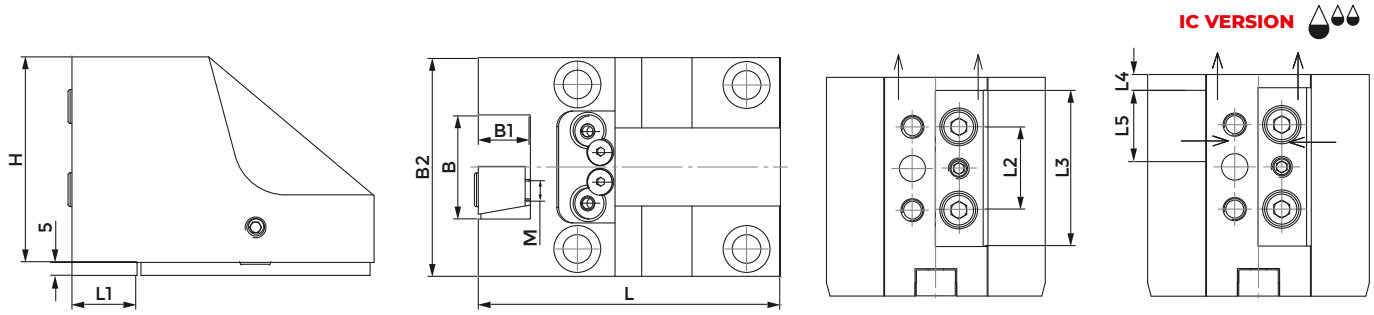

COD.	INTERNAL COOLANT	B1	B	B2	L	L1	L2	L3	L4	L5	H	M
128-41524	NO	20	40	84	116	25	32	60	6	27	79	M8
128-41525	NO	25	50	98	121	30	46	80	8	32	84	M10
128-41525-IC	YES	25	50	98	121	30	46	80	8	32	84	M10

COD.	CLAMPING PLATE	KEY	SCREW FOR KEY	COOLANT BALL	SCREW FOR BALL	O RING
128-41524	832-007030	814-203230	811-101016	833-001410	811-108024	823-101015
128-41525	832-007540	814-203230	811-101016	833-001410	811-108024	823-101015
128-41525-IC	832-007540	814-203230	811-101016	833-001410	811-108024	823-101015

RADIAL TOOLHOLDER

IC VERSION

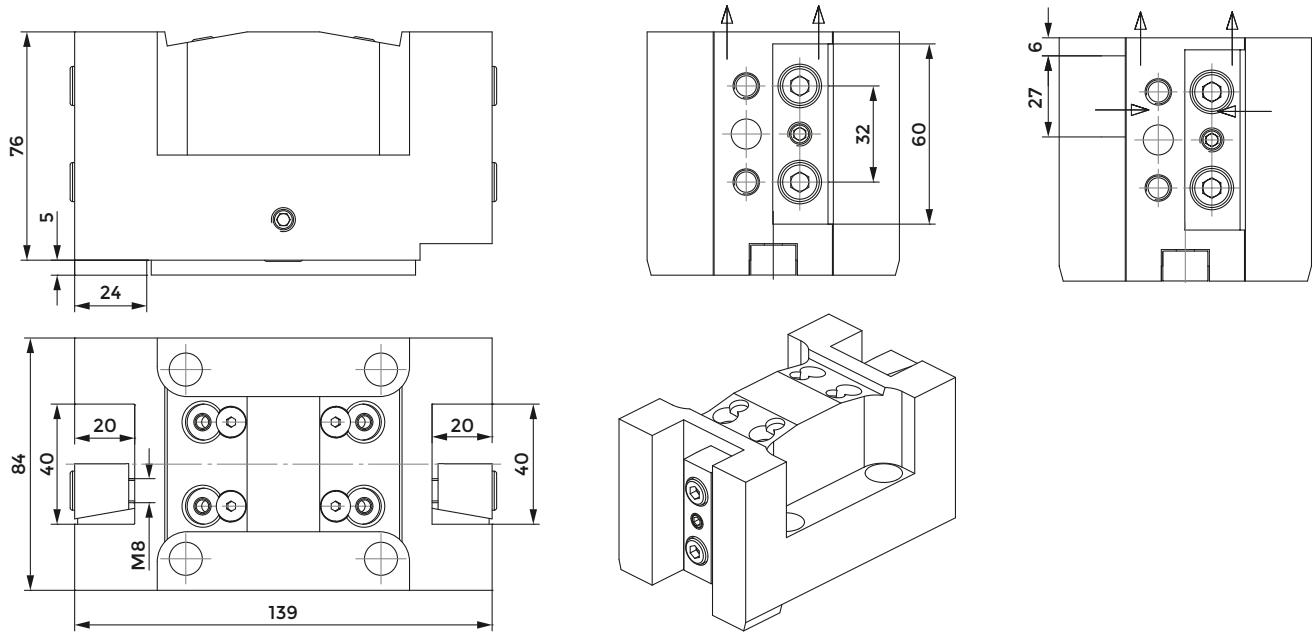

COD.	INTERNAL COOLANT	CLAMPING PLATE	KEY	SCREW FOR KEY	COOLANT BALL	SCREW FOR BALL	O RING
128-41527	NO	832-007030	814-203230	811-101016	833-001410	811-108024	823-101015
128-41527-IC	SI	832-007030	814-203230	811-101016	833-001410	811-108024	823-101015

AXIAL TOOLHOLDER

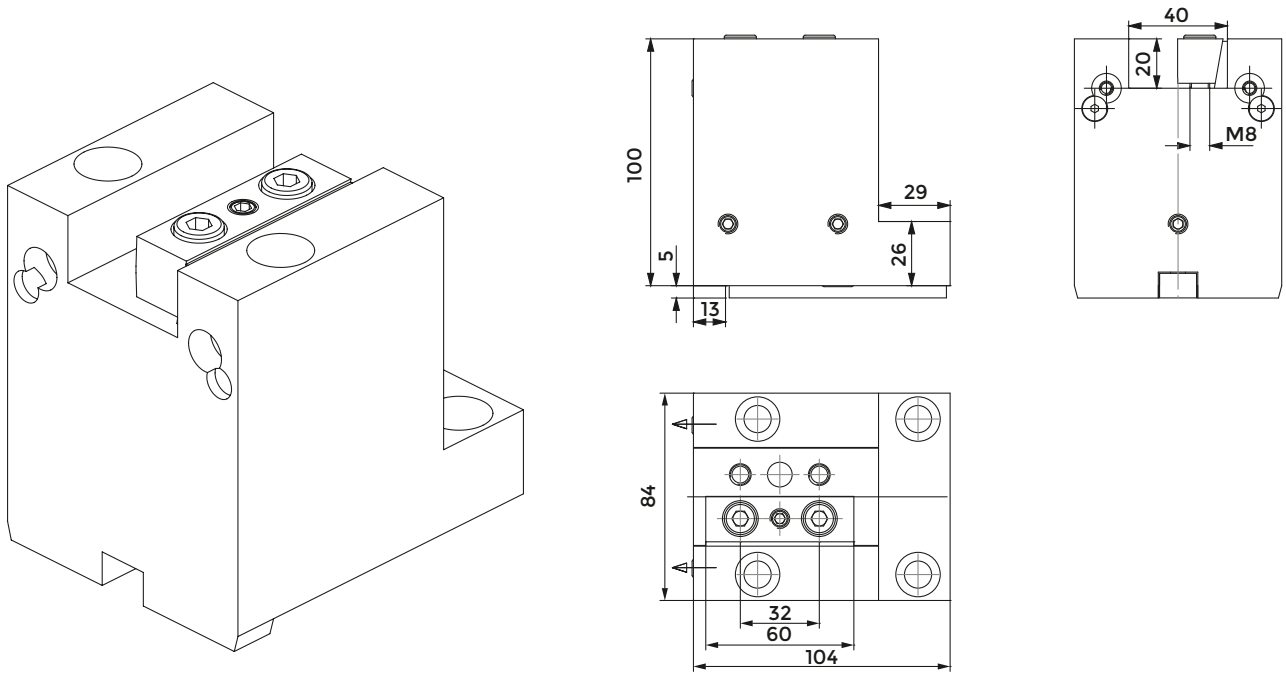

COD.	CLAMPING PLATE	KEY	SCREW FOR KEY	COOLANT BALL	SCREW FOR BALL	O RING
128-31515	832-007030	814-203230	811-101016	833-001410	811-108024	823-101015

CUT-OFF HOLDER

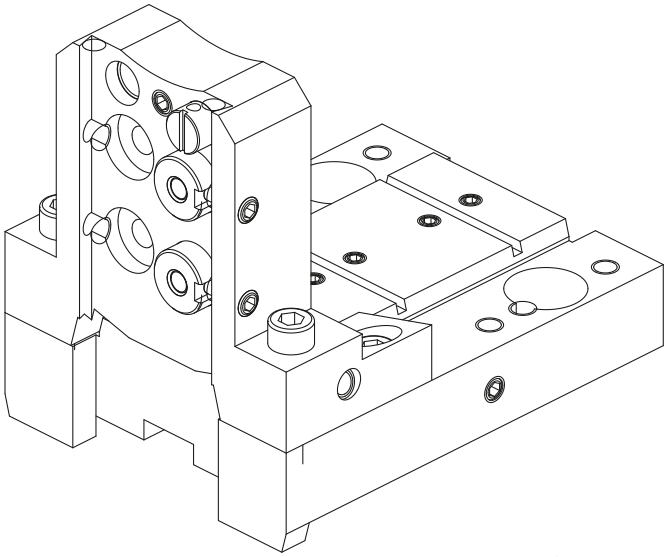

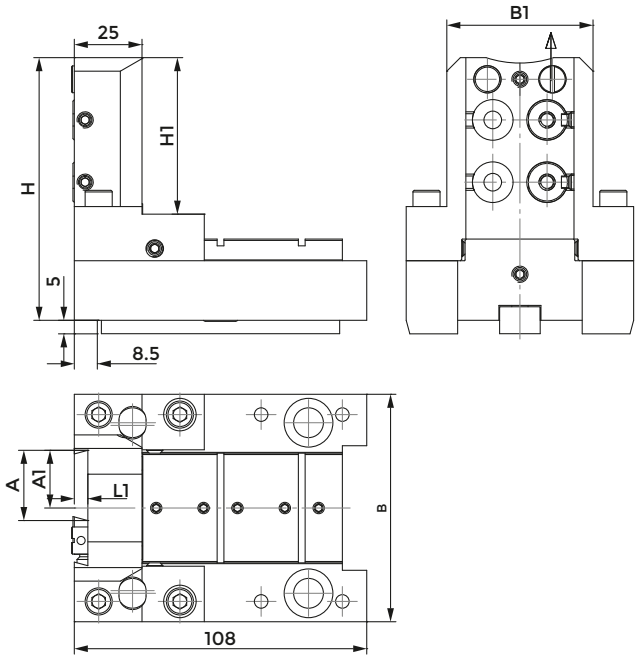

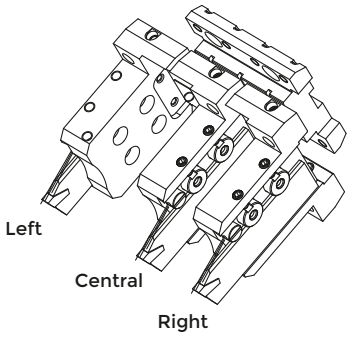

COD.	A	A1	L1	B	B1	H	M	KEY	SCREW FOR KEY	COOLANT NOZZLE	O RING FOR COOLANT NOZZLE	O RING FOR INTERNAL COOLANT
128-11566	26	21.4	5	84	54	97	58	814-203230	811-101015	833-001490	823-101058	-
128-11567	32	25	6	94	63	105	66	814-203230	811-101015	833-001490	823-101058	-

COD.	O RING FOR BODY	O RING FOR COOLANT INTAKE	SHIM PLATE	SCREW FOR PLATE	CLAMPING PLATE	SPRING	CLAMPING SCREW	SCREW
128-11566	823-101061	823-101015	832-014448	811-108037	832-014447	824-300012	811-101028	811-104013
128-11567	823-101061	823-101015	832-014448	811-108037	832-014450	824-300012	811-101029	811-104013

TOOLHOLDER FOR BORING BAR

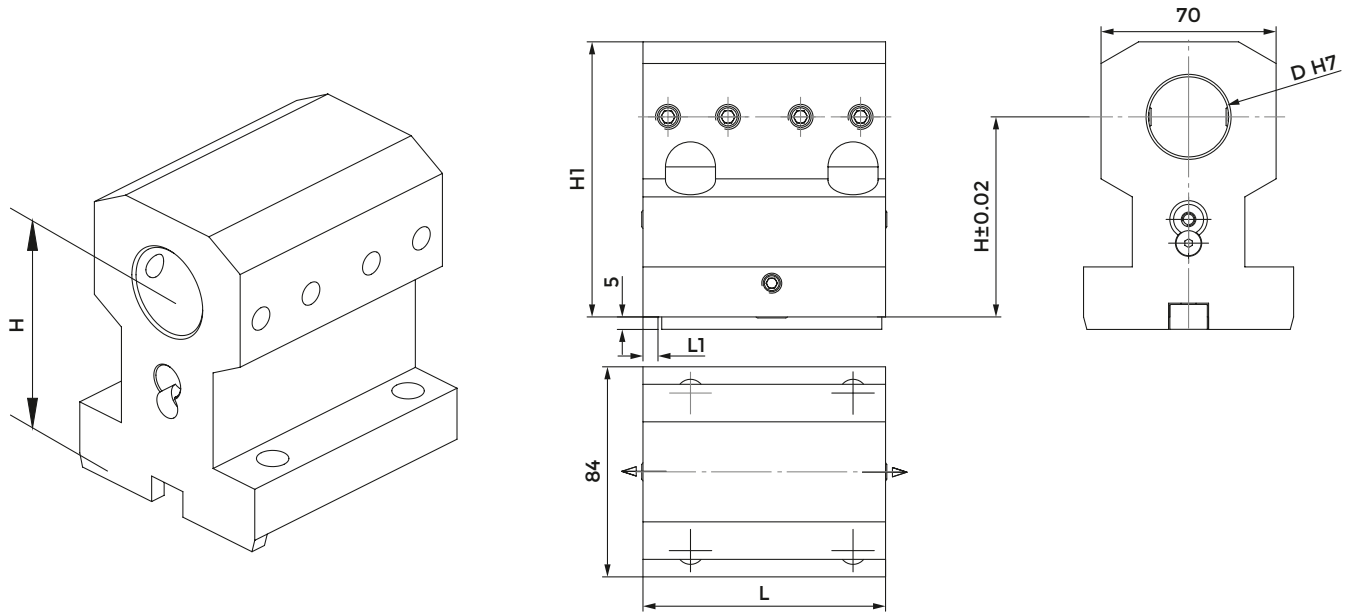

COD.	D	H	H1	L	L1	CLAMPING SCREW	KEY	SCREW FOR KEY	COOLANT BALL	SCREW FOR BALL	O RING
128-21538	32	80	110	97	6	811-102038	814-203230	811-101016	833-001410	811-108024	823-101015
128-21540	32	100	130	97	6	811-102038	814-203230	811-101016	833-001410	811-108024	823-101015
128-21548	40	80	110	106	15	811-102037	814-203230	811-101016	833-001410	811-108024	823-101015

COMBI TOOLHOLDER WITH INTERNAL COOLANT FOR BORING BAR AND INSERT DRILL

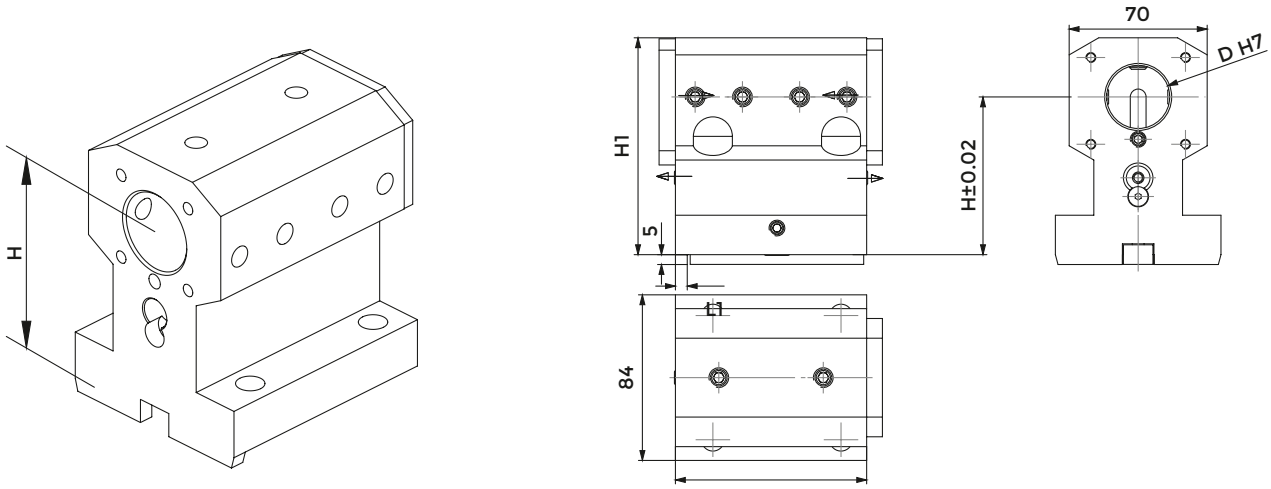

COD.	D	H	H1	L	L1
128-21539	32	80	110	97	6
128-21541	32	100	130	97	6
128-21549	40	80	110	97	6

COD.	CLAMPING SCREW 1 (D32 M10X20) (D40 M10X16)	CLAMPING SCREW 2 (D32 M10X16) (D40 M10X12)	KEY	SCREW FOR KEY	COOLANT BALL	SCREW FOR BALL	COVER	SCREW FOR COVER	O RING
128-21539	811-102038	811-102037	814-203230	811-101016	833-001410	811-108024	832-003363	811-101016	823-101015
128-21541	811-102038	811-102037	814-203230	811-101016	833-001410	811-108024	832-003363	811-101016	823-101015
128-21549	811-102037	811-102036	814-203230	811-101016	833-001410	811-108024	832-003363	811-101016	823-101015

TOOLHOLDER FOR BORING BAR

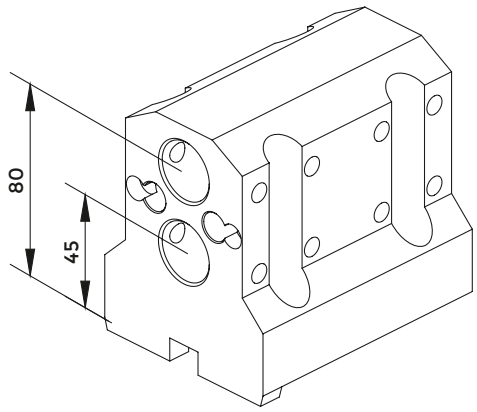

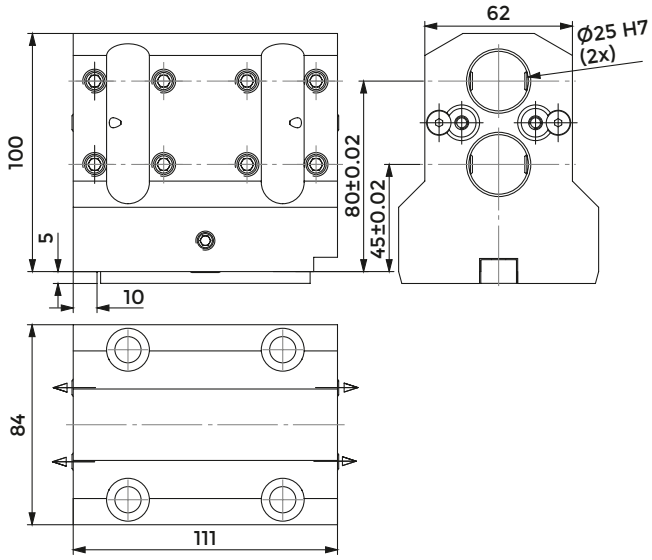

COD.	CLAMPING SCREW	KEY	SCREW FOR KEY	COOLANT BALL	SCREW FOR BALL	O RING
128-21542	811-102038	814-203230	811-101016	833-001410	811-108024	823-101015

PROTECTION COVER

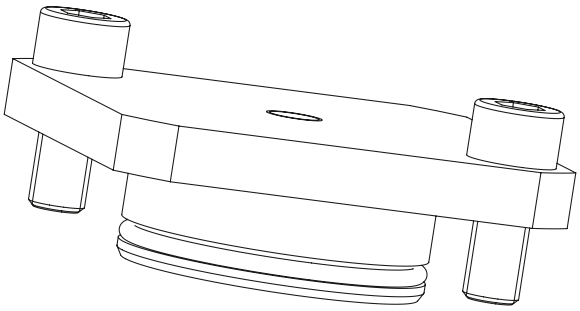

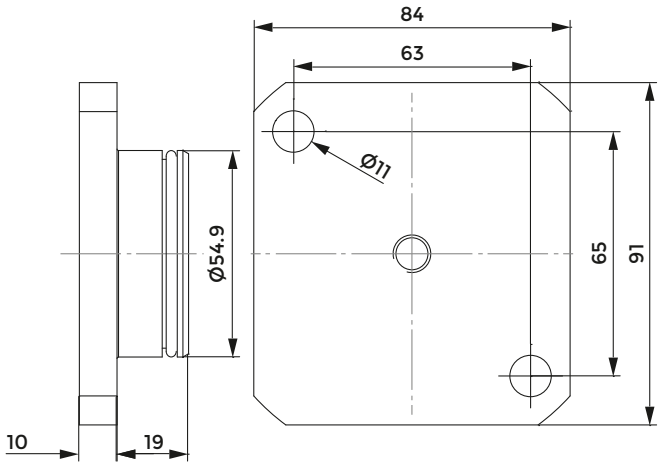

COD.	O RING
137-00244	823-101064

CMZ - MIYANO

Index of machines p. 360

FACE AND O.D. CUTTING HOLDER

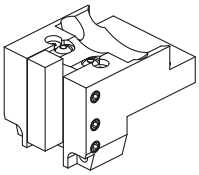

KTL15/10000/06
20x20 mm

FACE AND O.D. CUTTING HOLDER

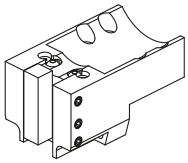

KTL15/10000/45
20x20 mm

FACE AND O.D. CUTTING HOLDER

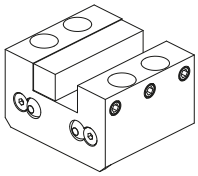

KTL15/10000/08
20x20 mm

QUALIFIED TOOL

FACE AND O.D. CUTTING HOLDER

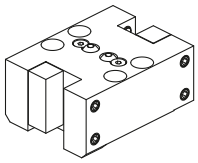

KTL15/10000/07 - 20x20 mm

ACCESSORIES

COMBI TOOLHOLDER WITH INTERNAL COOLANT FOR BORING BAR AND INSERT DRILL

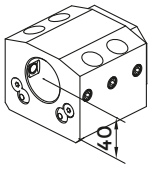

KTL15/10000/12
Ø40 mm

COMBI TOOLHOLDER WITH INTERNAL COOLANT FOR BORING BAR AND INSERT DRILL

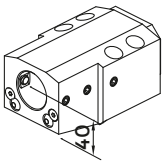

KTL15/10000/38
Ø40 mm

BORING BAR SLEEVE
p. 726

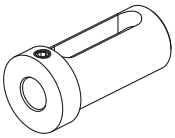

8768 (Ø16 mm)
8770 (Ø20 mm)
8771 (Ø25 mm)
8772 (Ø32 mm)

TOOLHOLDER FOR BORING BAR

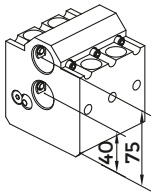

KTL15/10000/11
Ø25 mm

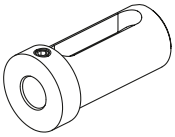

8759 (Ø12 mm)
8761 (Ø16 mm)
8763 (Ø20 mm)

CONNECTION

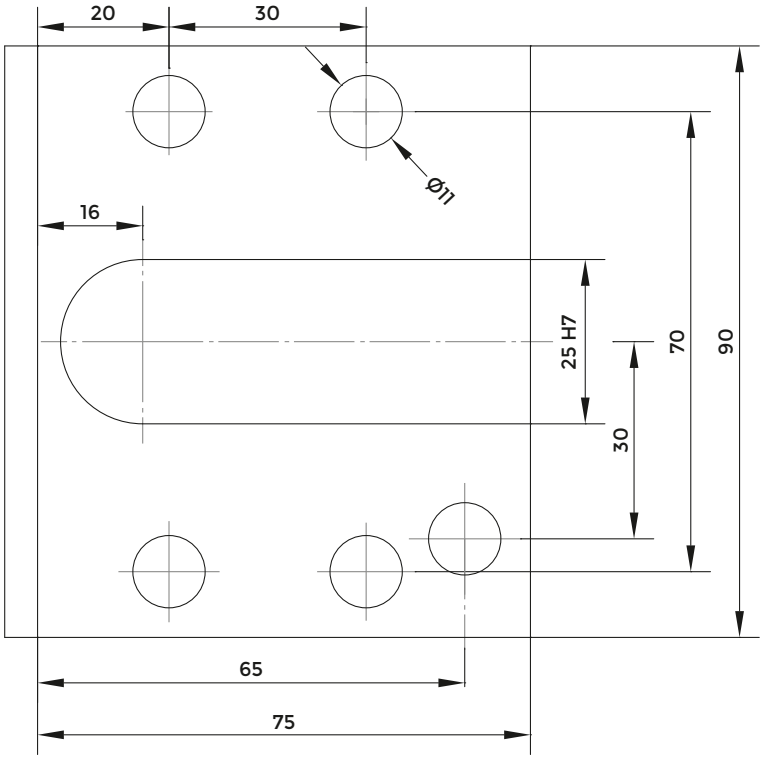

RADIAL TOOLHOLDER

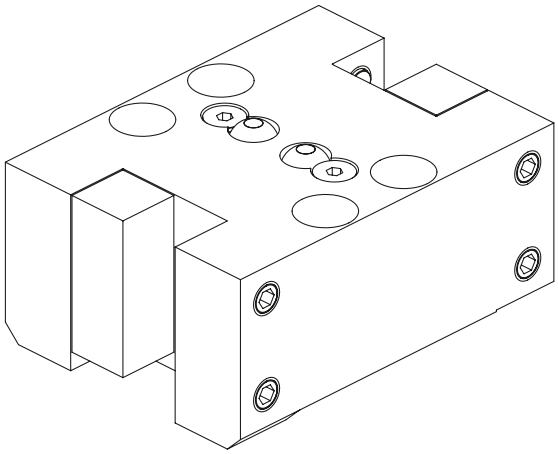

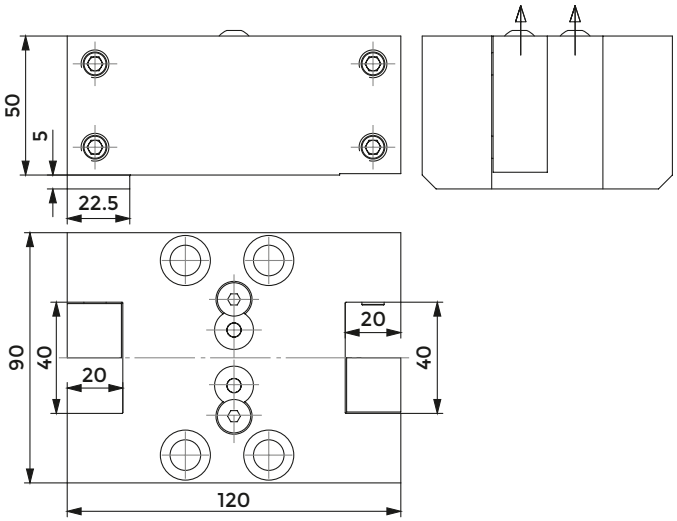

COD.	CLAMPING SCREW	CLAMPING PLATE	COOLANT BALL	SCREW FOR BALL
	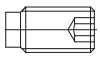			
KTL 15/10000/07	811-104030	832-002222	833-001470	811-108018

RADIAL TOOLHOLDER

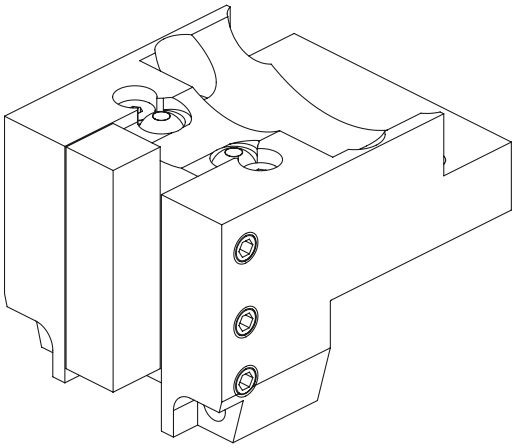

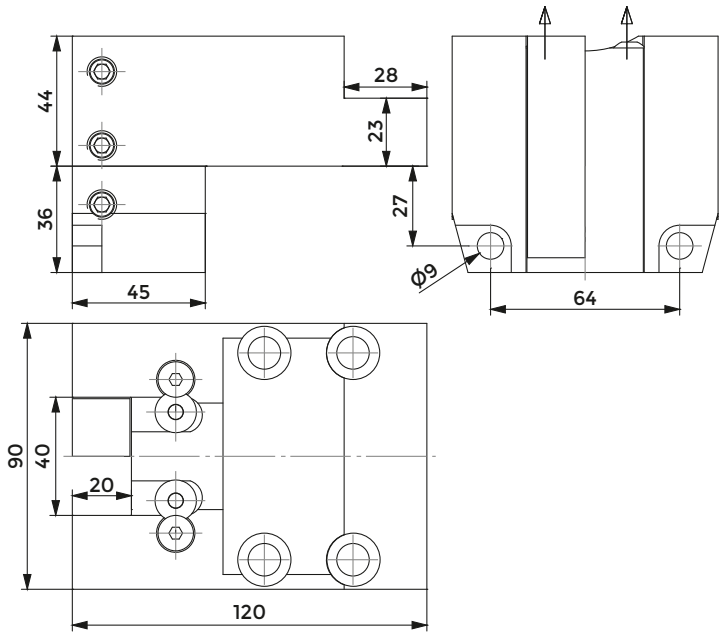

COD.	CLAMPING SCREW	CLAMPING PLATE	COOLANT BALL	SCREW FOR BALL
KTL 15/10000/06	811-104030	832-002223	833-001470	811-108018

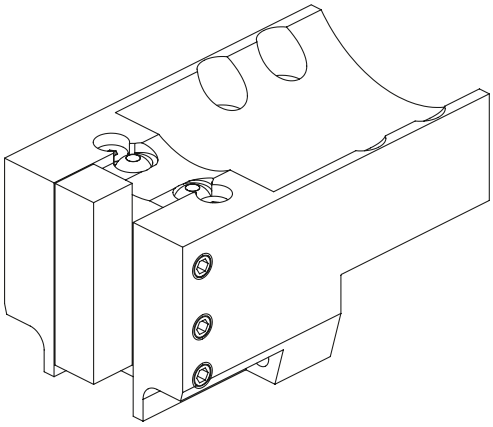

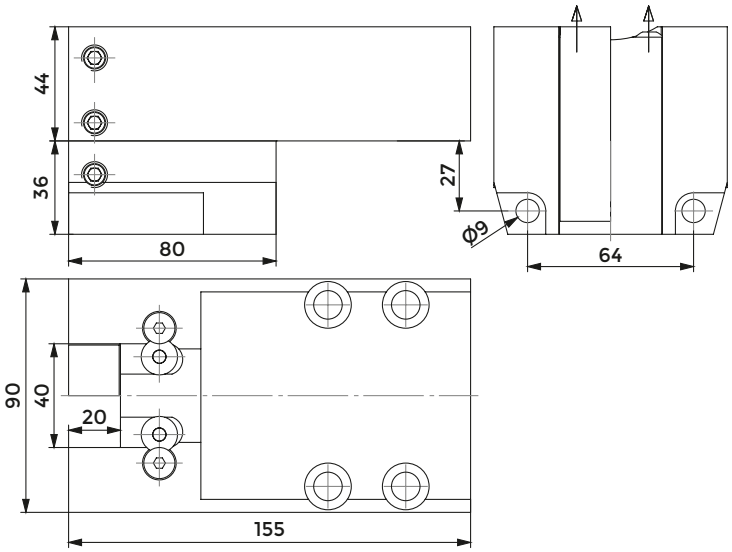

COD.	CLAMPING SCREW	CLAMPING PLATE	COOLANT BALL	SCREW FOR BALL
KTL 15/10000/45	811-104030	832-002223	833-001470	811-108018

AXIAL TOOLHOLDER

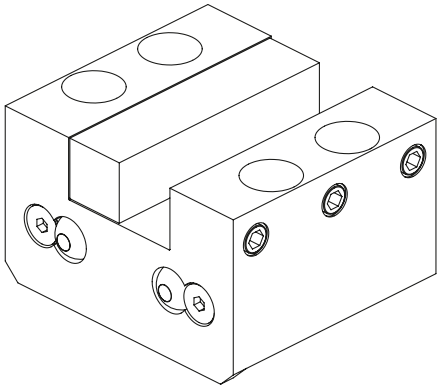

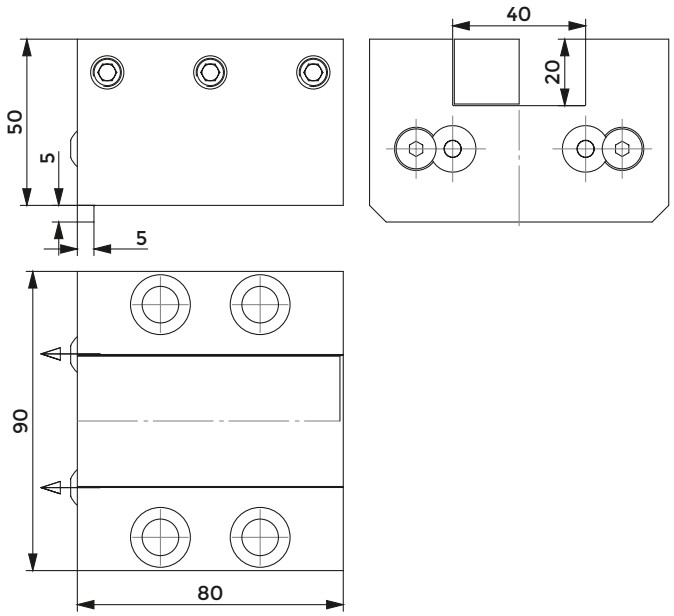

COD.	CLAMPING SCREW	CLAMPING PLATE	COOLANT BALL	SCREW FOR BALL
	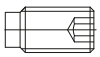			
KTL 15/10000/08	811-104030	832-002223	833-001470	811-108018

COMBI TOOLHOLDER WITH INTERNAL COOLANT FOR BORING BAR AND INSERT DRILL

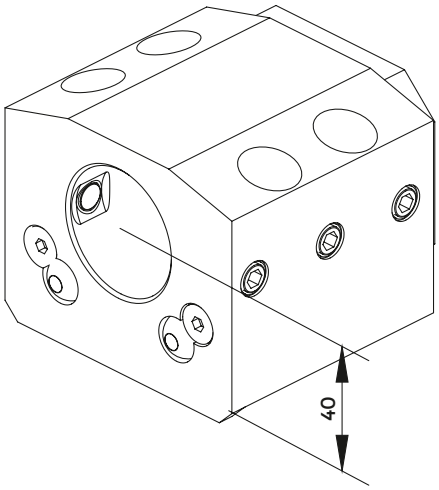

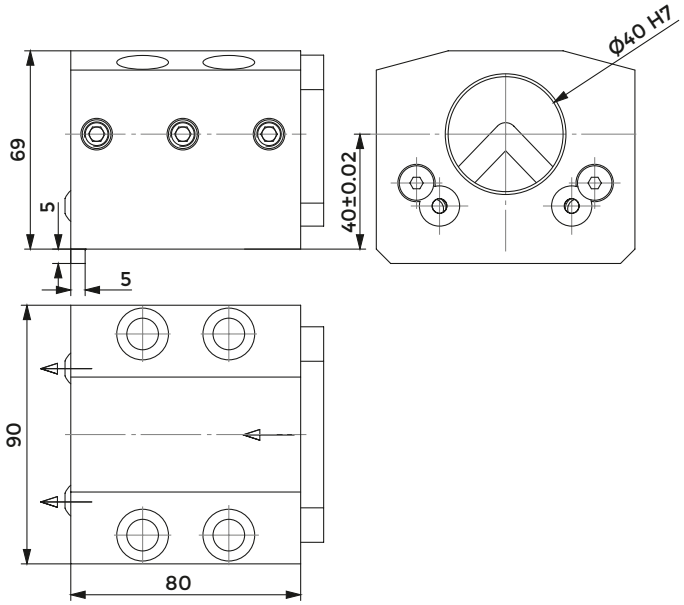

COD.	CLAMPING SCREW	COVER	SCREW FOR COVER	COOLANT BALL	SCREW FOR BALL
			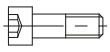		
KTL 15/10000/12	811-104030	832-003063	811-101016	833-001470	811-108018

COMBI TOOLHOLDER FOR BORING BAR AND INSERTDRILL

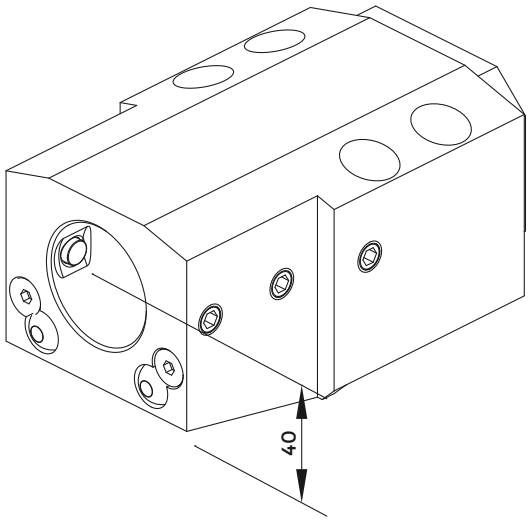

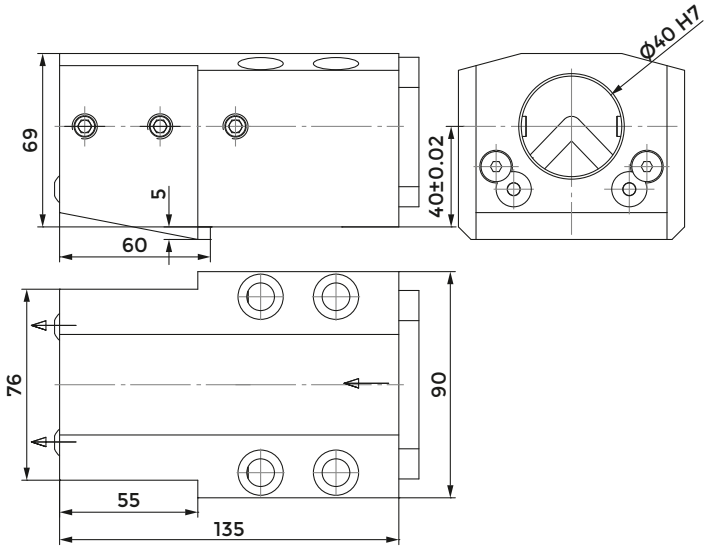

COD.	CLAMPING SCREW 1 (M10X20)	CLAMPING SCREW 2 (M10X25)	COVER	SCREW FOR COVER	COOLANT BALL	SCREW FOR BALL
				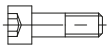		
KTL 15/10000/38	811-104029	811-104030	832-003063	811-101016	833-001470	811-108018

DOUBLE TOOLHOLDER FOR BORING BAR

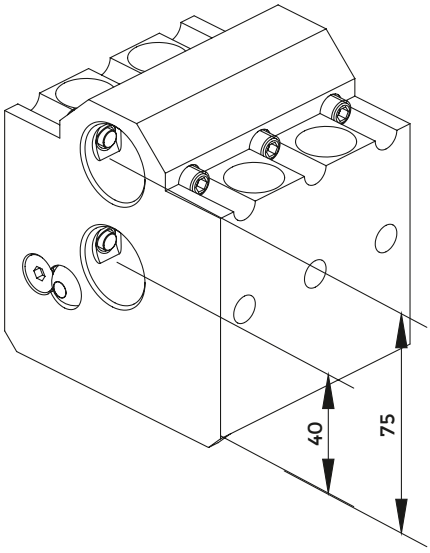

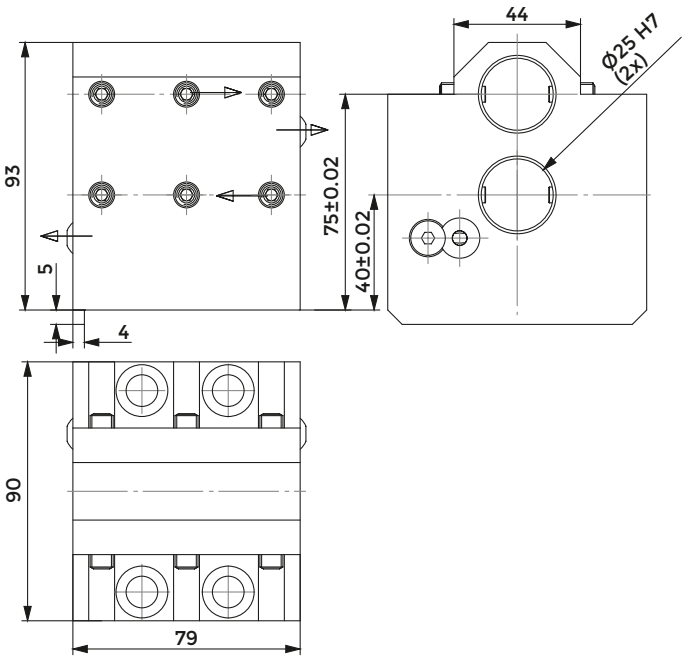

COD.	CLAMPING SCREW	COOLANT BALL	SCREW FOR BALL
KTL 15/10000/11	811-104021	833-001470	811-108018

DMG MORI (VDI30)

Index of machines p. 360

RADIAL TURRET

COMBI TOOLHOLDER WITH INTERNAL COOLANT FOR BORING BAR AND INSERT DRILL

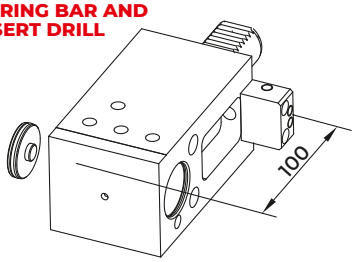

115-53025 (Ø32)

Plug:
823-301260

COMBI TOOLHOLDER WITH INTERNAL COOLANT FOR BORING BAR AND INSERT DRILL

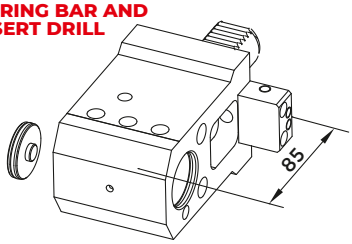

115-53027 (Ø25)
115-53028 (Ø32)

Plug:
823-301270
823-301260

COMBI TOOLHOLDER WITH INTERNAL COOLANT FOR BORING BAR AND INSERT DRILL

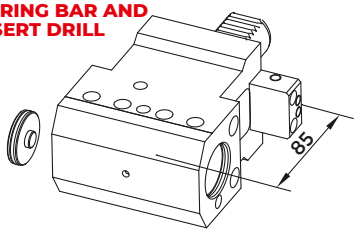

115-53030 (Ø32)

Plug:
823-301260

ACCESSORIES

BORING BAR SLEEVE
p. 726

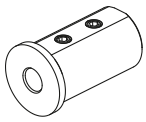

9600 (Ø25/Ø8)
9601 (Ø25/Ø10)
9602 (Ø25/Ø12)

9607 (Ø32/Ø8)
9608 (Ø32/Ø10)
9609 (Ø32/Ø12)

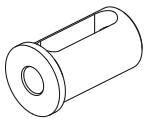

9604 (Ø25/Ø16)
9606 (Ø25/Ø20)

9611 (Ø32/Ø16)
9613 (Ø32/Ø20)
9614 (Ø32/Ø25)

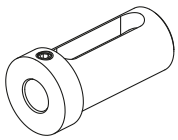

8759 (Ø25/Ø12)
8761 (Ø25/Ø16)
8763 (Ø25/Ø20)

8764 (Ø32/Ø16)
8766 (Ø32/Ø20)
8767 (Ø32/Ø25)

FAST-IN p. 506
DRIVEN TOOLS p. 302

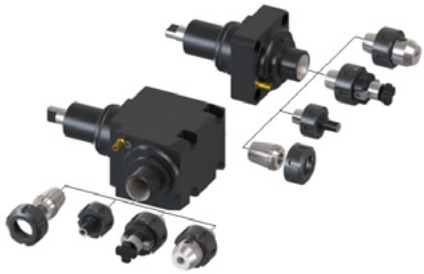

COMBI TOOLHOLDER WITH INTERNAL COOLANT FOR BORING BAR AND INSERT DRILL

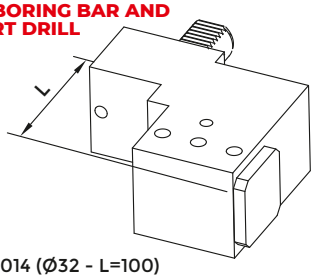

115-53014 (Ø32 - L=100)

COMBI TOOLHOLDER WITH INTERNAL COOLANT FOR BORING BAR AND INSERT DRILL

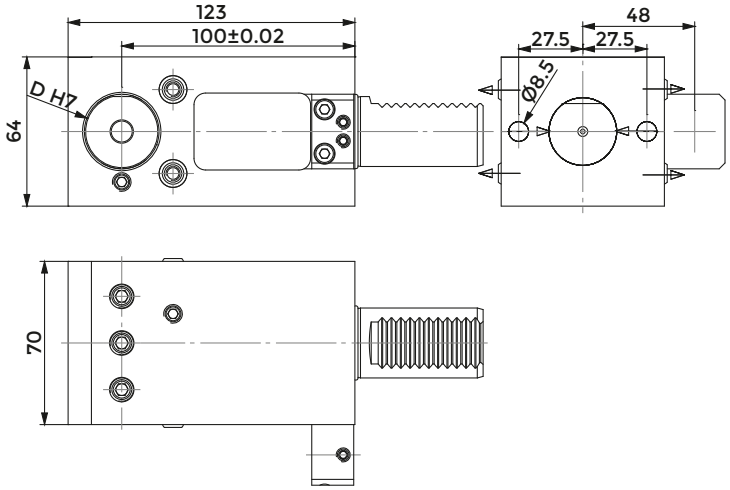

COD.	D	CLAMPING SCREW	COOLANT PLUG	SEEGER RING FOR COOLANT PLUG	O RING FOR COOLANT PLUG
115-53025	32	811-102037	823-301260	822-102008	823-101017

COD.	COOLANT NOZZLE	STOP NUT	INSERT FOR STOP NUT	SCREW FOR STOP NUT	SCREW FOR STOP NUT (M6x6)	SCREW FOR STOP NUT (M6X8)	O RING VDI30
115-53025	833-001080	832-003301	832-003302	811-101021	811-106015	811-102018	823-101017

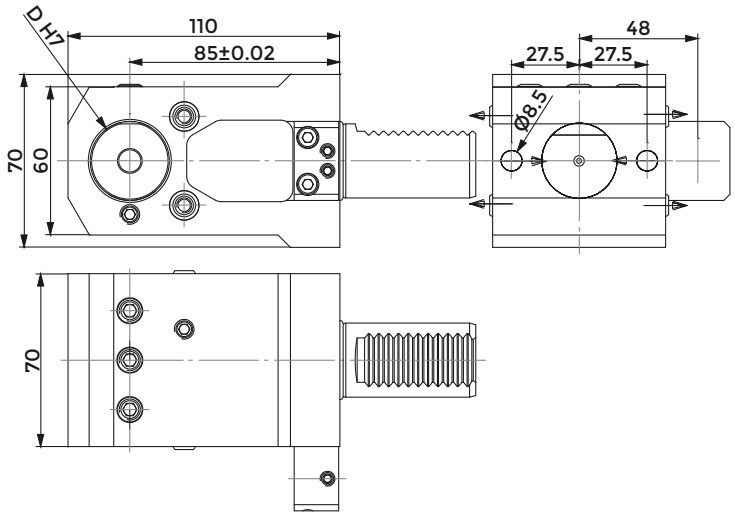

COD.	D	CLAMPING SCREW	COOLANT PLUG	SEEGER RING FOR COOLANT PLUG	O RING FOR COOLANT PLUG
115-53027	25	811-102029	823-301270	822-102009	823-101031
115-53028	32	811-102037	823-301260	822-102008	823-101017

COD.	COOLANT NOZZLE	STOP NUT	INSERT FOR STOP NUT	SCREW FOR STOP NUT	SCREW FOR STOP NUT (M6x6)	SCREW FOR STOP NUT (M6X8)	O RING VDI30
115-53027	833-001080	832-003301	832-003302	811-101021	811-106015	811-102018	823-101017
115-53028	833-001080	832-003301	832-003302	811-101021	811-106015	811-102018	823-101017

COMBI TOOLHOLDER WITH INTERNAL COOLANT FOR BORING BAR AND INSERT DRILL

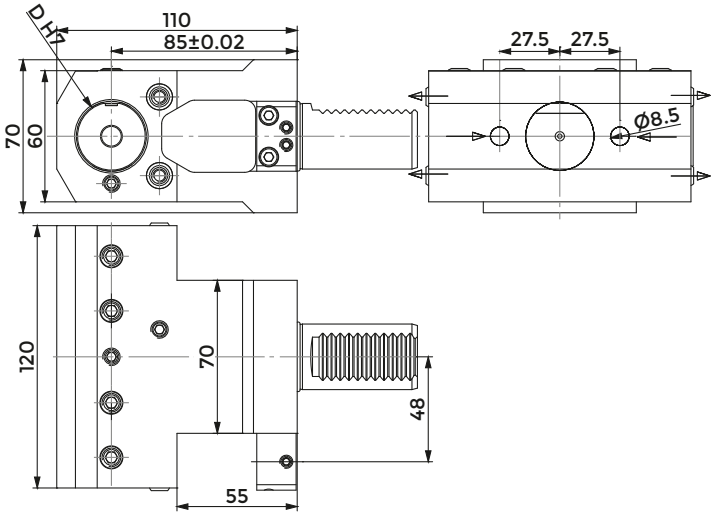

COD.	D	CLAMPING SCREW 1	CLAMPING SCREW 2	COOLANT PLUG	O RING FOR COOLANT PLUG	O RING FOR COOLANT PLUG
115-53030	32	811-102037	811-104021	823-301260	822-102008	823-101017

COD.	COOLANT NOZZLE	STOP NUT	INSERT FOR STOP NUT	SCREW FOR STOP NUT	SCREW FOR STOP NUT (M6x6)	SCREW FOR STOP NUT (M6X8)	O RING VDI30
115-53030	833-001080	832-003301	832-003302	811-101021	811-106015	811-102018	823-101017

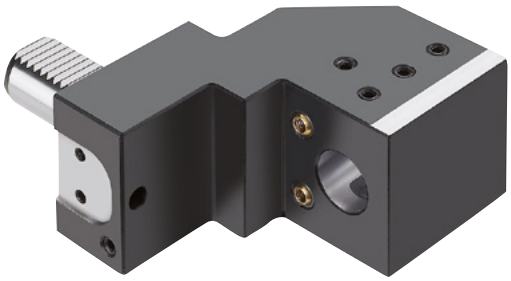

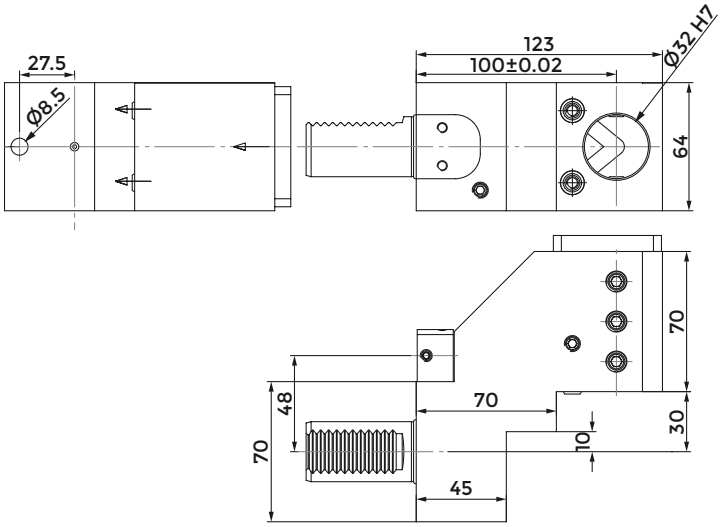

COD.	CLAMPING SCREW	COVER INTERNAL COOLANT	SCREW FOR COVER	COOLANT NOZZLE	STOP NUT
115-53014	811-102037	832-003304	811-101016	833-001080	832-003301

COD.	INSERT FOR STOP NUT	SCREW FOR STOP NUT	SCREW FOR STOP NUT (M6x6)	SCREW FOR STOP NUT (M6X8)	O RING VDI30
115-53014	832-003302	811-101021	811-106015	811-102018	823-101017

DMG MORI (VDI40)

Index of machines p. 360

RADIAL TURRET

COMBI TOOLHOLDER WITH INTERNAL COOLANT FOR BORING BAR AND INSERT DRILL

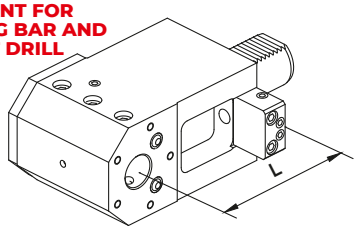

115-54130 (Ø25 - L=100)

TOOLHOLDER FOR BORING BAR

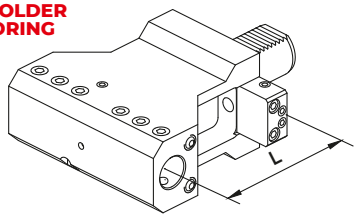

115-54133 (Ø25 - L=100)

COMBI TOOLHOLDER WITH INTERNAL COOLANT FOR BORING BAR AND INSERT DRILL

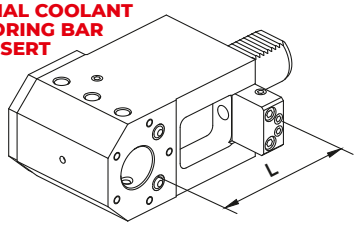

115-54131 (Ø32 - L=100)
115-54078 (Ø25 - L=120)
115-54079 (Ø32 - L=120)

COMBI TOOLHOLDER WITH INTERNAL COOLANT FOR BORING BAR AND INSERT DRILL

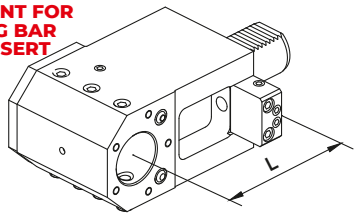

115-54132 (Ø40 - L=100)
115-54080 (Ø40 - L=120)

ACCESSORIES

BORING BAR SLEEVE
p. 726

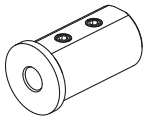

9600 (Ø25/Ø8)
9601 (Ø25/Ø10)
9602 (Ø25/Ø12)

9607 (Ø32/Ø8)
9608 (Ø32/Ø10)
9609 (Ø32/Ø12)

9615 (Ø40/Ø8)
9616 (Ø40/Ø10)
9617 (Ø40/Ø12)

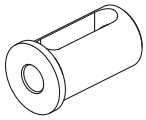

9604 (Ø25/Ø16)
9606 (Ø25/Ø20)

9611 (Ø32/Ø16)
9613 (Ø32/Ø20)
9614 (Ø32/Ø25)

9619 (Ø40/Ø16)
9621 (Ø40/Ø20)
9622 (Ø40/Ø25)
9623 (Ø40/Ø32)

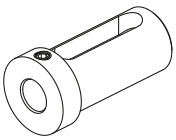

8754 (Ø20/Ø8)
8755 (Ø20/Ø10)
8756 (Ø20/Ø12)

8759 (Ø25/Ø12)
8761 (Ø25/Ø16)
8763 (Ø25/Ø20)

8764 (Ø32/Ø16)
8766 (Ø32/Ø20)
8767 (Ø32/Ø25)

8768 (Ø40/Ø16)
8770 (Ø40/Ø20)
8771 (Ø40/Ø25)
8772 (Ø40/Ø32)

FAST-IN p. 506
DRIVEN TOOLS p. 302

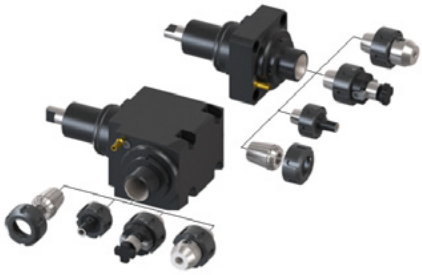

COMBI TOOLHOLDER WITH INTERNAL COOLANT FOR BORING BAR AND INSERT DRILL

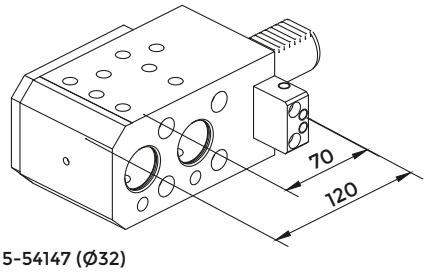

115-54147 (Ø32)

COMBI TOOLHOLDER WITH INTERNAL COOLANT FOR BORING BAR AND INSERT DRILL

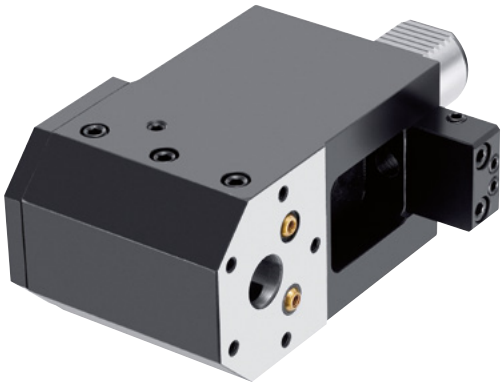

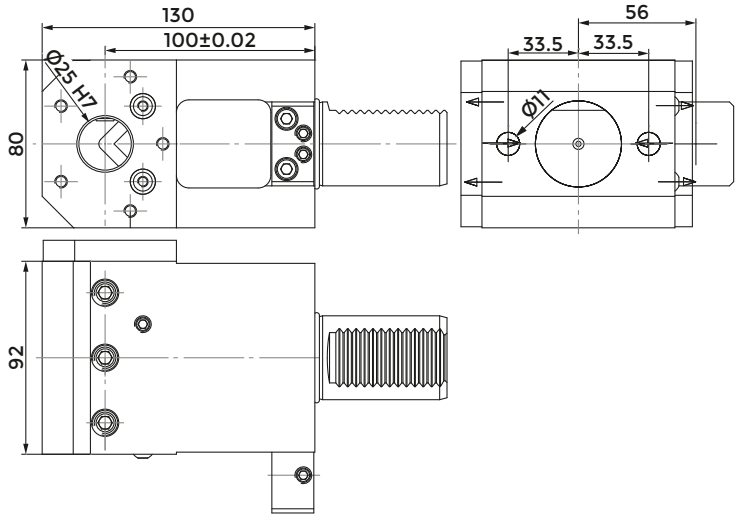

COD.	CLAMPING SCREW 1 (M12x25)	CLAMPING SCREW 2 (M10x25)	COVER INTERNAL COOLANT	SCREW FOR COVER	COOLANT NOZZLE
115-54130	811-102045	811-102039	832-003303	811-101027	833-001080

COD.	STOP NUT	INSERT FOR STOP NUT	SCREW FOR STOP NUT	SCREW FOR STOP NUT	O RING VDI40
115-54130	832-003237	832-003238	811-101032	811-102027	823-101036

TOOLHOLDER FOR BORING BAR

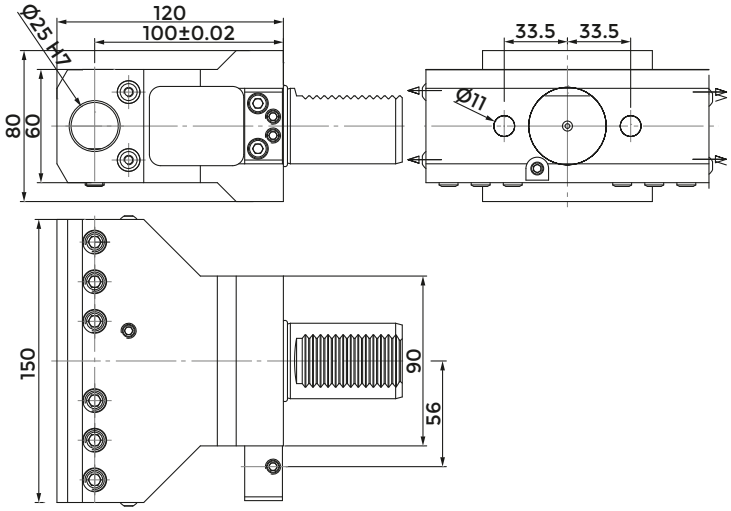

COD.	CLAMPING SCREW 1 (M12x16)	CLAMPING SCREW 2 (M10x20)	COOLANT NOZZLE	STOP NUT
115-54133	811-102043	811-102038	833-001080	832-003237

COD.	INSERT FOR STOP NUT	SCREW FOR STOP NUT	SCREW FOR STOP NUT	O RING VDI40
115-54133	832-003238	811-101032	811-102027	823-101036

COMBI TOOLHOLDER WITH INTERNAL COOLANT FOR BORING BAR AND INSERT DRILL

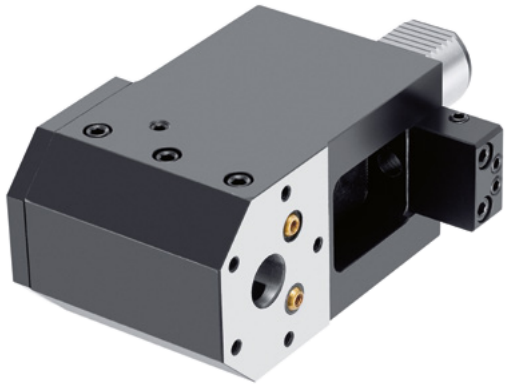

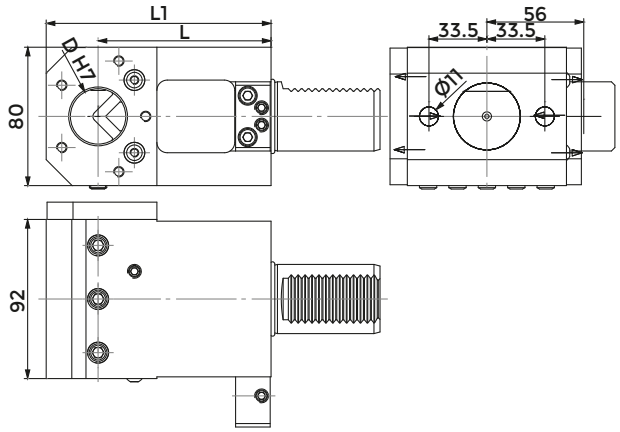

COD.	D	L	L1	CLAMPING SCREW 1 (M12x25)	CLAMPING SCREW 2 (M10x25)	COVER INTERNAL COOLANT	SCREW FOR COVER
115-54131	32	100	130	811-102044	811-102039	832-003303	811-101027
115-54078	25	120	150	811-102045	811-102039	832-003236	811-101027
115-54079	32	120	150	811-102044	811-102039	832-003236	811-101027

COD.	STOP NUT	INSERT FOR STOP NUT	SCREW FOR STOP NUT	SCREW FOR STOP NUT	O RING VDI40	COOLANT NOZZLE
115-54131	832-003237	832-003238	811-101032	811-102027	823-101036	833-001080
115-54078	832-003237	832-003238	811-101032	811-102027	823-101036	833-001080
115-54079	832-003237	832-003238	811-101032	811-102027	823-101036	833-001080

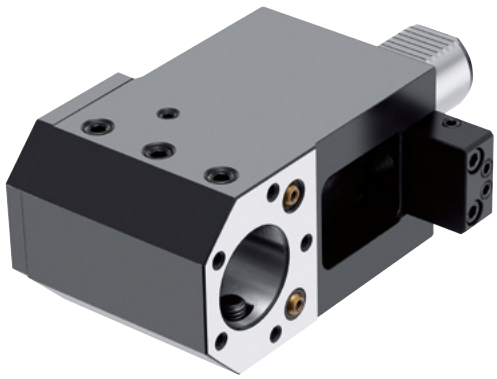

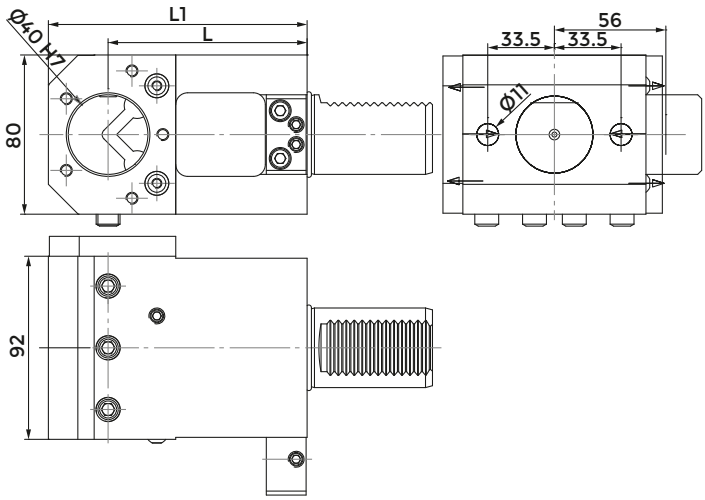

COD.	L	L1	CLAMPING SCREW 1 (M12x25)	CLAMPING SCREW 2 (M10x25)	COVER INTERNAL COOLANT	SCREW FOR COVER
115-54132	100	130	811-102044	811-102045	832-003303	811-101027
115-54080	120	150	811-102044	811-102045	832-003236	811-101027

COD.	STOP NUT	INSERT FOR STOP NUT	SCREW FOR STOP NUT	SCREW FOR STOP NUT	O RING VDI40	COOLANT NOZZLE
115-54132	832-003237	832-003238	811-101032	811-102027	823-101036	833-001080
115-54080	832-003237	832-003238	811-101032	811-102027	823-101036	833-001080

COMBI TOOLHOLDER WITH INTERNAL COOLANT FOR BORING BAR AND INSERT DRILL

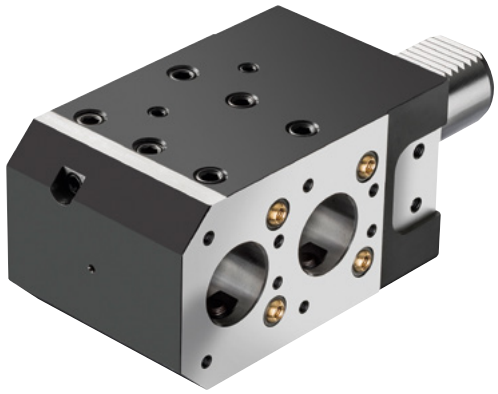

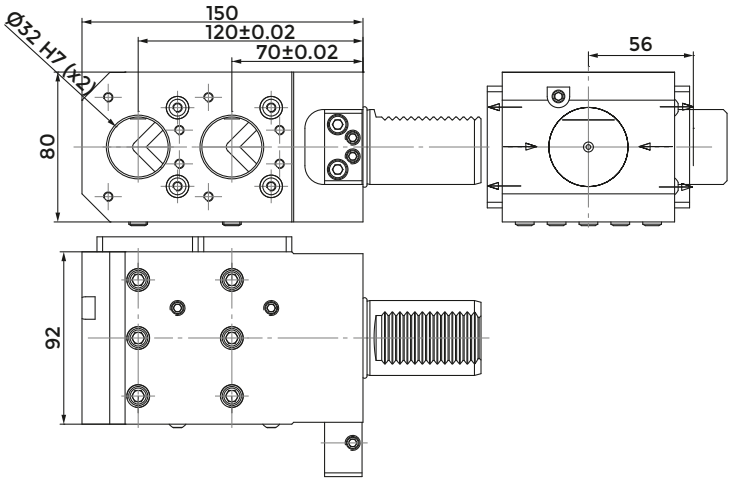

COD.	CLAMPING SCREW 1 (M12x25)	CLAMPING SCREW 2 (M10x25)	COVER 1 INTERNAL COOLANT	COVER 2 INTERNAL COOLANT	SCREW FOR COVER
					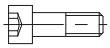
115-54147	811-102044	811-102039	832-003318	832-003319	811-101017

COD.	STOP NUT	INSERT FOR STOP NUT	SCREW FOR STOP NUT	SCREW FOR STOP NUT	O RING VDI40	COOLANT NOZZLE
			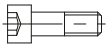			
115-54147	832-003237	832-003238	811-101032	811-102027	823-101036	833-001080

DMG MORI (BMT40)

Index of machines p. 360

FACE AND O.D. CUTTING HOLDER

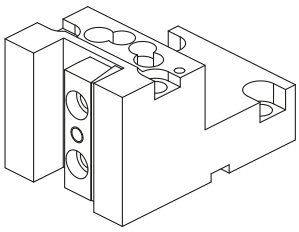

KMS-T00224 (H70) - 20X20 mm

FACE AND O.D. CUTTING HOLDER

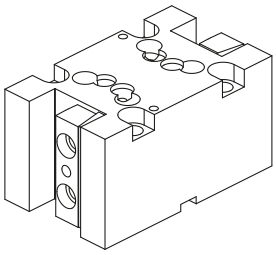

KMS-T00228 (H70) - 20x20 mm

QUALIFIED TOOL

CONTROL PIN
p. 758

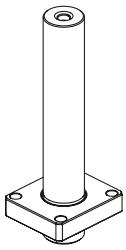

137-00193

FACE AND O.D. CUTTING HOLDER

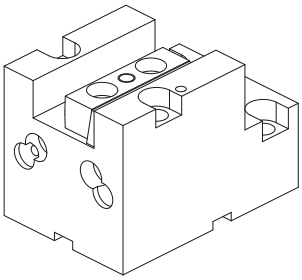

KMS-T03017 - 20x20 mm

FACE AND O.D. CUTTING HOLDER

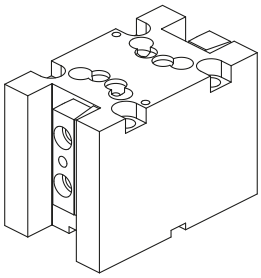

KMS-T00226 (H95) - 20x20 mm

ACCESSORIES

FAST-IN DRIVEN TOOLS
p. 506
p. 302

COMBI TOOLHOLDER WITH INTERNAL COOLANT FOR BORING BAR AND INSERT DRILL

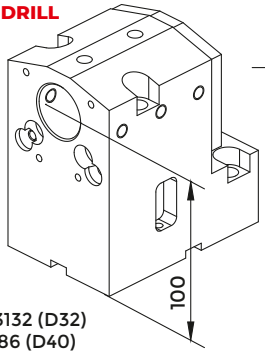

KMS-T13132 (D32)
137-00286 (D40)

BORING BAR SLEEVE
p. 739

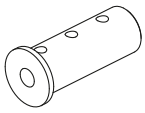

D32	D40
8946 (Ø25 mm)	5906 (Ø32 mm)
8945 (Ø20 mm)	5905 (Ø25 mm)
8944 (Ø16 mm)	5904 (Ø20 mm)
8943 (Ø12 mm)	5903 (Ø16 mm)
8942 (Ø10 mm)	5902 (Ø12 mm)
8941 (Ø8 mm)	5901 (Ø10 mm)
	5900 (Ø8 mm)

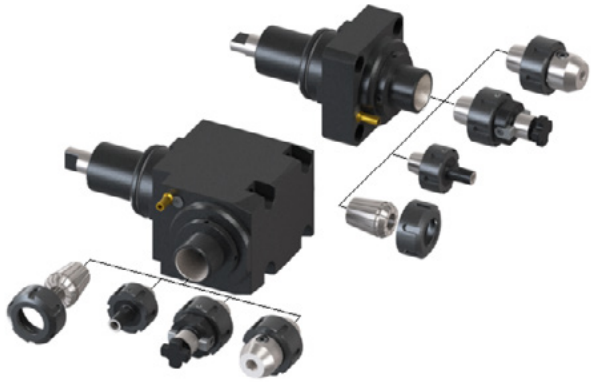

TOOLHOLDER FOR BORING BAR

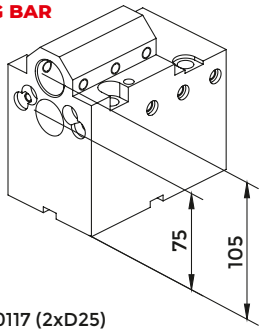

KMS-T10117 (2xD25)

PROTECTION COVER

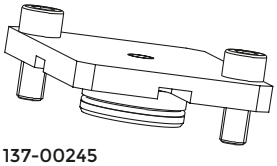

137-00245

CONNECTION

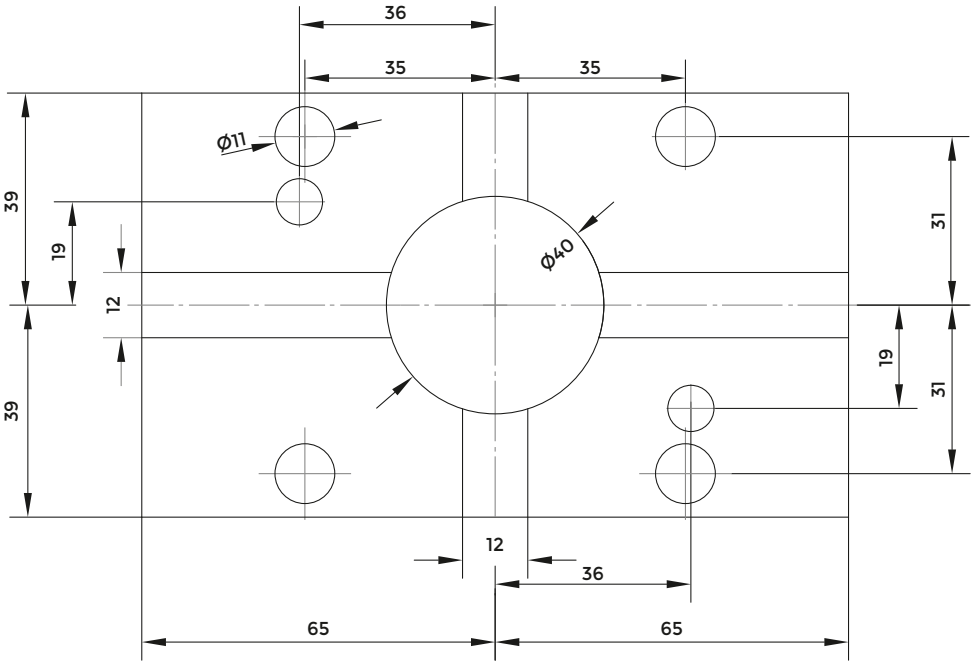

RADIAL TOOLHOLDER

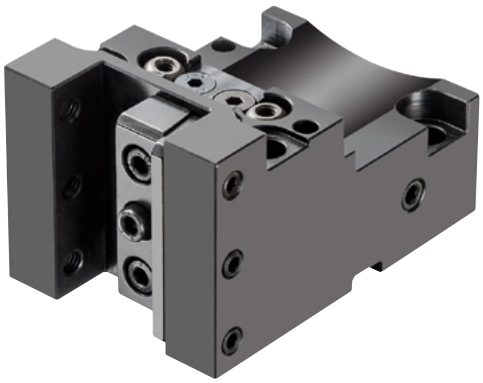

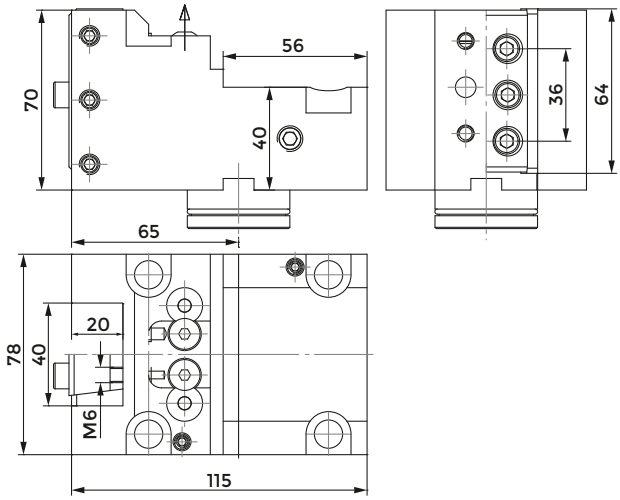

COD.	CLAMPING PLATE	CLAMPING SCREW	SCREW FOR DISASSEMBLE	COOLANT BALL
KMS-T00224	832-020460	811-102029	811-104016	833-001470

COD	SCREW FOR BALL	CENTRAL PIN	SCREW FOR PIN	O RING FOR PIN (36x2)	O RING FOR PIN (28X2)
KMS-T00224	811-108018	832-020451	811-101029	823-101016	823-101018

RADIAL TOOLHOLDER

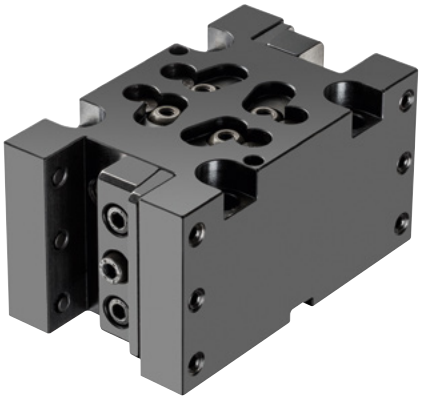

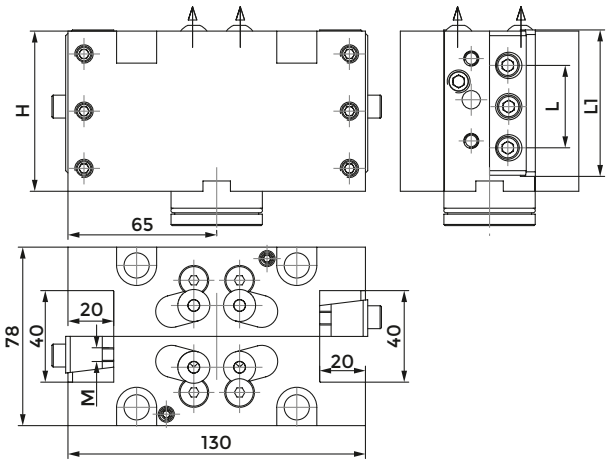

COD.	H	L	L1	M	CLAMPING PLATE	CLAMPING SCREW	SCREW FOR DISASSEMBLE	COOLANT BALL
KMS-T00226	95	32	64	M8	832-020400	-	811-102023	833-001470
KMS-T00228	70	36	64	M6	832-020460	811-102029	811-104016	833-001470

COD.	SCREW FOR BALL	CENTRAL PIN	SCREW FOR PIN	O RING FOR PIN (36x2)	O RING FOR PIN (28X2)
KMS-T00226	811-108018	832-020121	811-101029	823-101016	823-101018
KMS-T00228	811-108018	832-020451	811-101029	823-101016	823-101018

AXIAL TOOLHOLDER

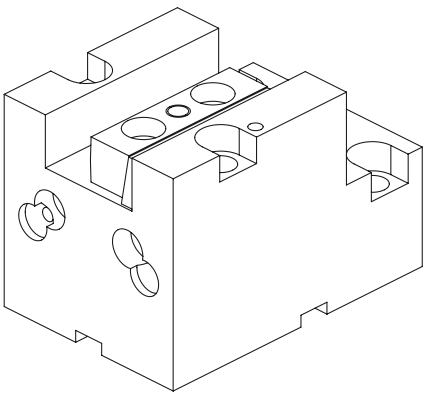

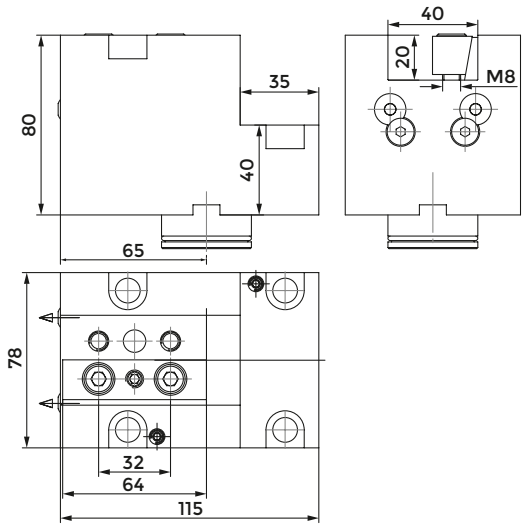

COD.	CLAMPING PLATE	SCREW FOR DISASSEMBLE	COOLANT BALL	SCREW FOR BALL
KMS-T03017	832-020400	811-102023	833-001470	811-108018

COD.	CENTRAL PIN	SCREW FOR PIN	O RING FOR PIN (36x2)	O RING FOR PIN (28X2)
KMS-T03017	832-020121	811-101029	823-101016	823-101018

COMBI TOOLHOLDER WITH INTERNAL COOLANT FOR BORING BAR AND INSERT DRILL

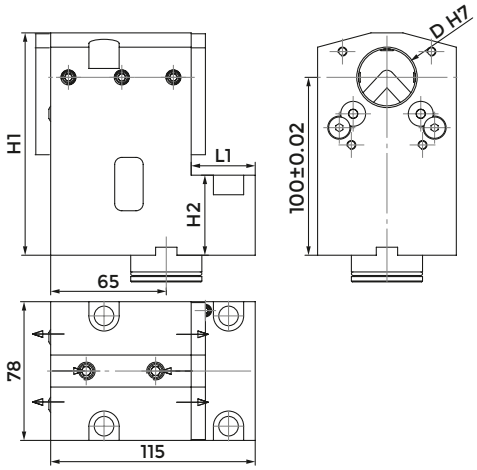

COD.	D	H1	H2	L1	CLAMPING SCREW 1 (D32 M8X20) - (D40 M10X20)	CLAMPING SCREW 2 (M10X10)	SCREW FOR DISASSEMBLE	COOLANT BALL	SCREW FOR BALL
KMS-T13132	32	125	45	36	811-102030	811-102035	811-102023	833-001470	811-108018
137-00286	40	129	33	26	811-102038	811-102035	811-102023	833-001470	811-108018

COD.	CENTRAL PIN	SCREW FOR PIN	O RING FOR PIN (36x2)	O RING FOR PIN (28X2)	COVER	SCREW FOR COVER
KMS-T13132	832-020121	811-101029	823-101016	823-101018	832-003378	811-101016
137-00286	832-020121	811-101029	823-101016	823-101018	832-003404	811-101016

TOOLHOLDER FOR BORING BAR

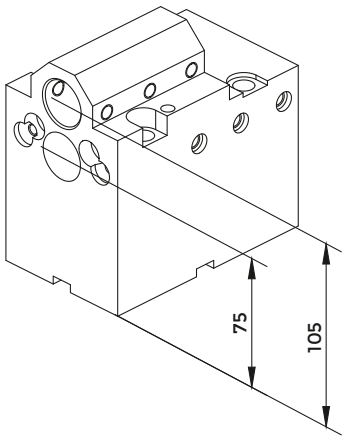

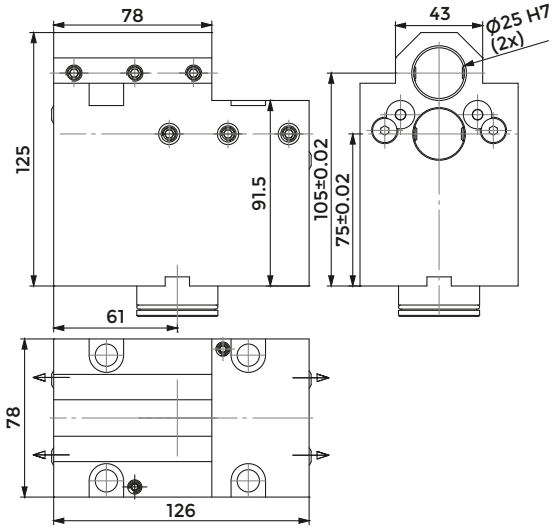

COD.	CLAMPING SCREW 1 (M8X25)	CLAMPING SCREW 2 (M8X20)	CLAMPING SCREW 3 (M8X10)	SCREW FOR DISASSEMBLE
KMS-T10117	811-102031	811-102030	811-102027	811-102023

COD.	COOLANT BALL	SCREW FOR BALL	CENTRAL PIN	SCREW FOR PIN	O RING FOR PIN (36x2)	O RING FOR PIN (28X2)
KMS-T10117	833-001470	811-108018	832-020121	811-101029	823-101016	823-101018

PROTECTION COVER

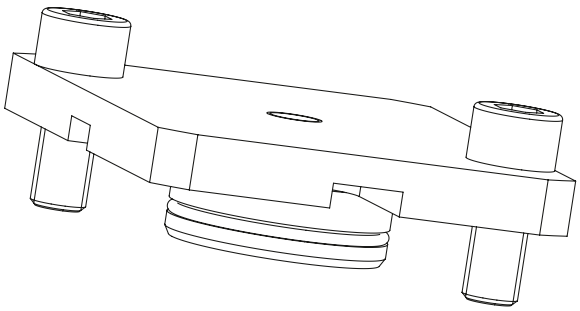

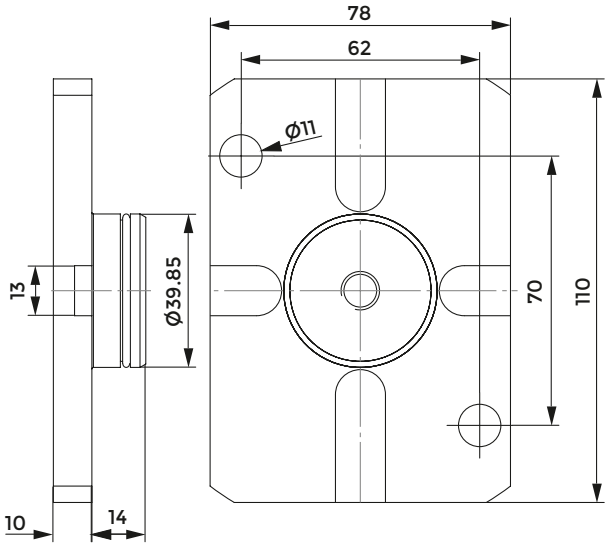

COD.	O RING
137-00245	823-101016

DMG MORI (BMT60) - GOODWAY

Index of machines p. 360

DIRECT MONTING ON TURRET

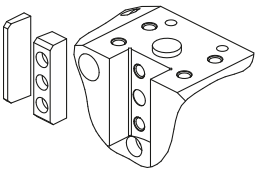

832-018722 - 25 mm
832-018721 - 25 mm

FACE AND O.D. CUTTING HOLDER

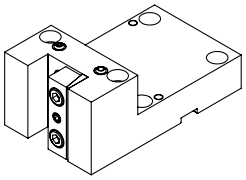

137-00372
25x25 mm
(20x20 mm con
COD. 832-014702)

FACE AND O.D. CUTTING HOLDER

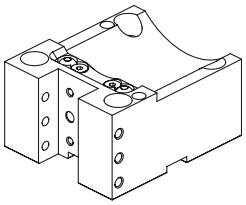

KMS-T00186
25x25 mm
(20x20 mm con
COD. 832-014702)
KMS-T00186-IC
25x25 mm
(20x20 mm con
COD. 832-014702)

FACE AND O.D. CUTTING HOLDER

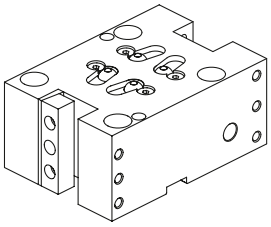

KMS-T00184
25x25 mm
(20x20 mm con
COD. 832-014702)
KMS-T00184-IC
25x25 mm
(20x20 mm con
COD. 832-014702)

FACE AND O.D. CUTTING HOLDER

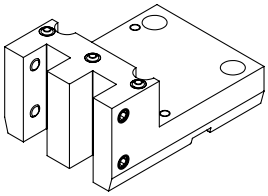

137-00373
25x25 mm
(20x20 mm con
COD. 832-014702)

FACE AND O.D. CUTTING HOLDER

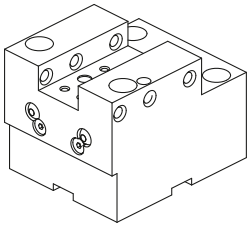

KMS-T03005
25x25 mm
(20x20 mm con
COD. 832-014702)
KMS-T03005-IC
25x25 mm
(20x20 mm con
COD. 832-014702)

FACE AND O.D. CUTTING HOLDER

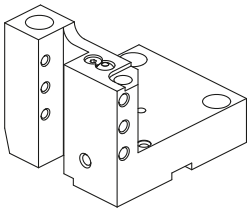

KMS-T00197
25x25 mm
(20x20 mm con
COD. 832-014702)
KMS-T00197-IC
25x25 mm
(20x20 mm con
COD. 832-014702)

TOOLHOLDER FOR BORING BAR

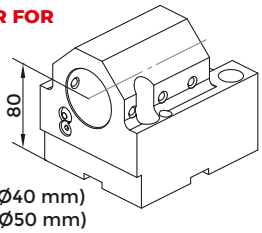

KMS-T10097 (Ø40 mm)
KMS-T10098 (Ø50 mm)

COMBI TOOLHOLDER FOR BORING BAR AND INSERT DRILL

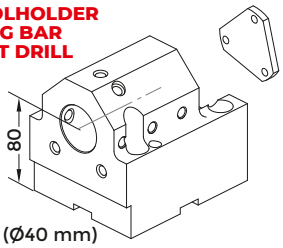

KMS-T13128 (Ø40 mm)
(INTERNAL COOLANT)

TOOLHOLDER FOR BORING BAR

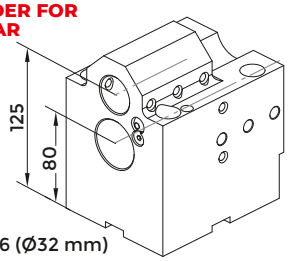

KMS-T10096 (Ø32 mm)

ACCESSORIES

BORING BAR SLEEVE
p. 726

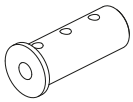

5906 (Ø32 mm)
5905 (Ø25 mm)
5904 (Ø20 mm)
5903 (Ø16 mm)
5902 (Ø12 mm)
5901 (Ø10 mm)
5900 (Ø8 mm)

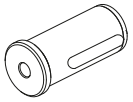

8969 (MT3)
8959 (MT2)

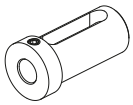

8768 (Ø16 mm)
8770 (Ø20 mm)
8771 (Ø25 mm)
8772 (Ø32 mm)

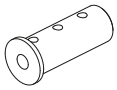

8946 (Ø25 mm)
8945 (Ø20 mm)
8944 (Ø16 mm)
8943 (Ø12 mm)
8942 (Ø10 mm)
8941 (Ø8 mm)

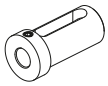

8764 (Ø16 mm)
8766 (Ø20 mm)
8767 (Ø25 mm)

FAST-IN p. 506
DRIVEN TOOLS p. 302

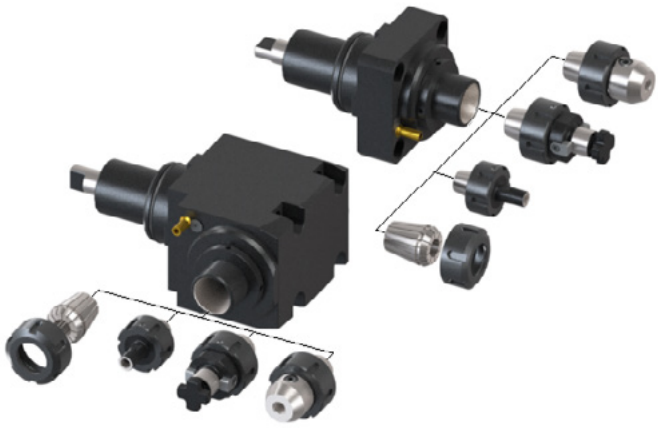

CONTROL PIN
p. 758

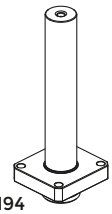

137-00194

PROTECTION COVER

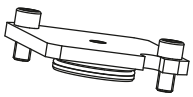

137-00246

CUT-OFF HOLDER

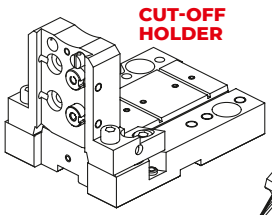

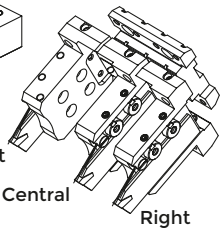

137-00092 (32 mm)

POLYGONAL TOOL HOLDER

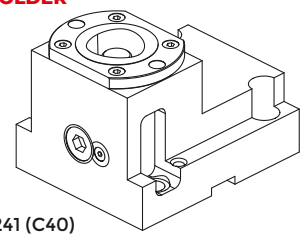

137-00241 (C40)

POLYGONAL TOOL HOLDER

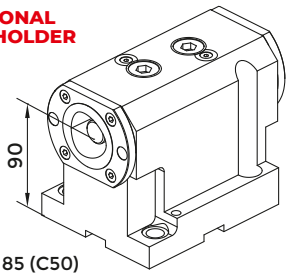

137-00185 (C50)

CONNECTION

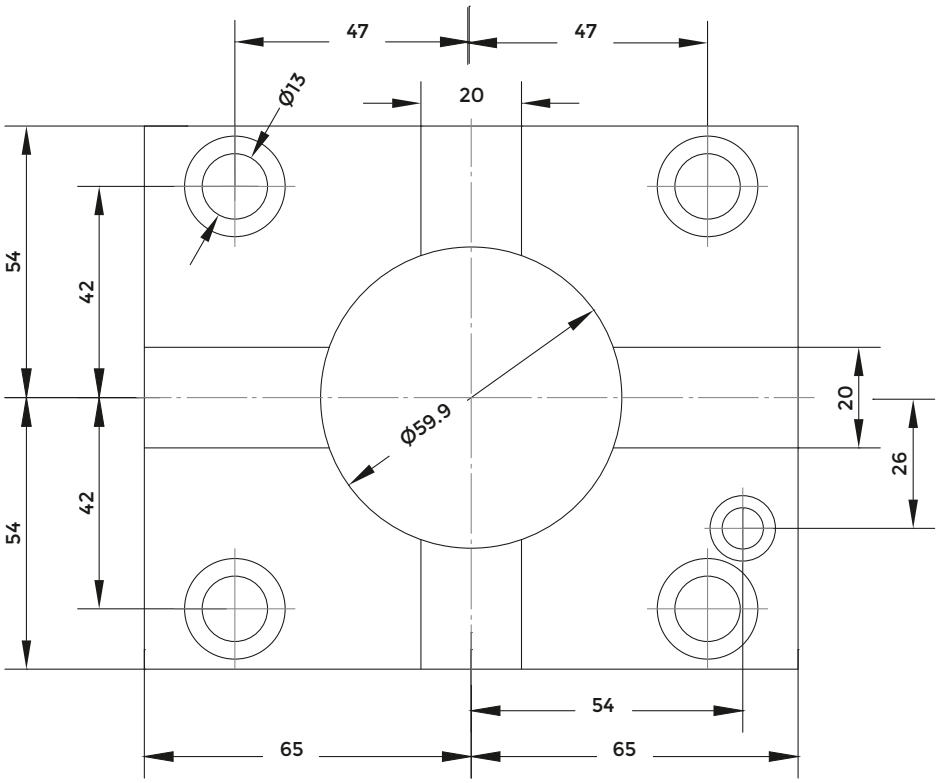

RADIAL TOOLHOLDER

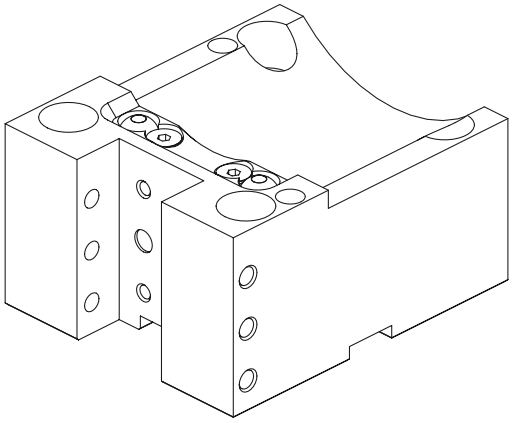

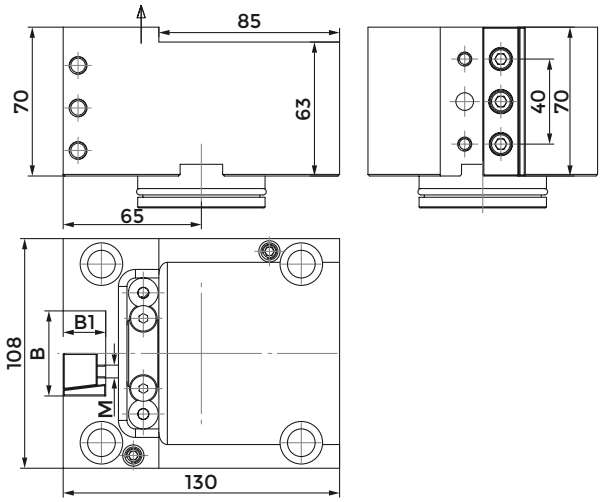

COD.	INTERNAL COOLANT	B	B1	M	CLAMPING PLATE	CLAMPING SCREW	SCREW FOR DISASSEMBLE	COOLANT BALL
KMS-T00186	NO	50	25	M8	832-018720	811-104021	811-102102	833-001470
KMS-T00186-IC	SI	50	25	M8	832-018720	811-104021	811-102102	833-001470

COD.	SCREW FOR BALL	CENTRAL PIN	SCREW FOR PIN	O RING FOR PIN (54X3)	O RING FOR PIN (44.5X3)	O RING FOR COOLANT (9.25X1.78)
KMS-T00186	811-108018	832-018741	811-101041	823-101077	823-101069	823-101076
KMS-T00186-IC	811-108018	832-018741	811-101041	823-101077	823-101069	823-101076

RADIAL TOOLHOLDER

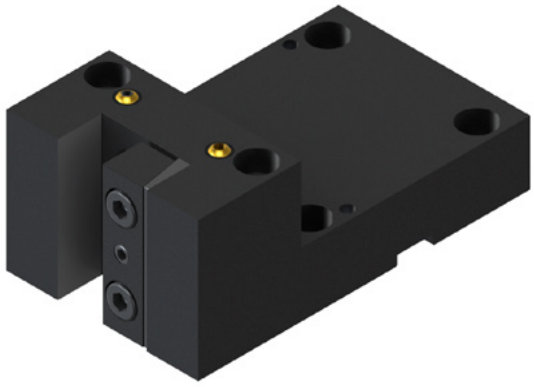

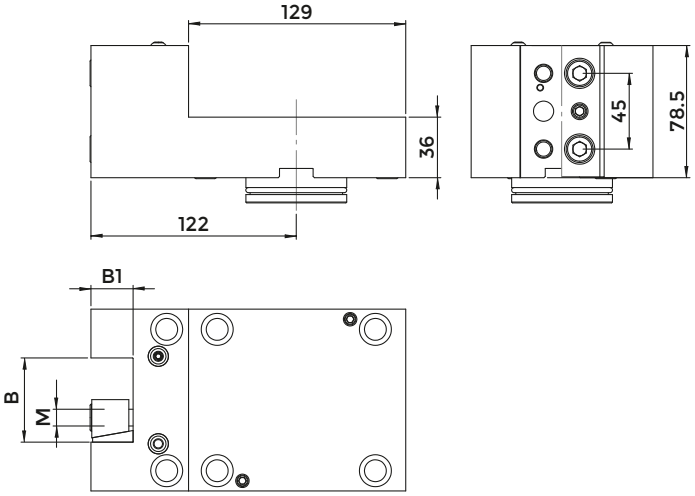

COD.	B	B1	M	CLAMPING PLATE	COOLANT BALL	CENTRAL PIN	SCREW FOR PIN	O RING FOR PIN (54X3)	O RING FOR PIN (44.5X3)	O RING FOR COOLANT
137-00372	50	25	M10	832-007470	833-001080	832-018741	811-101041	823-101077	823-101069	823-101015

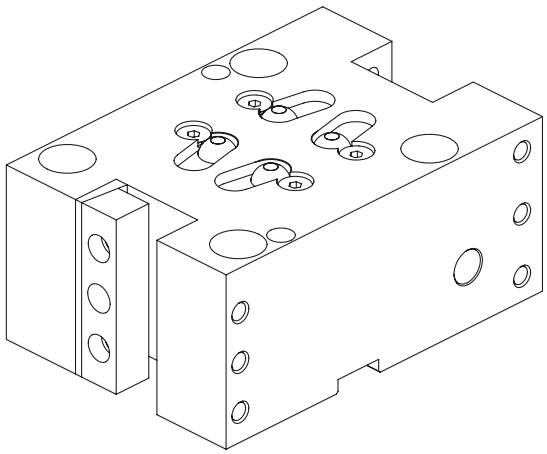

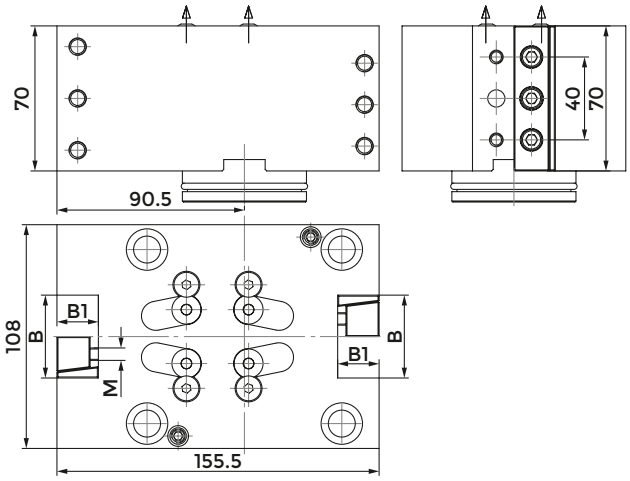

COD.	INTERNAL COOLANT	B	B1	M	CLAMPING PLATE	CLAMPING SCREW	SCREW FOR DISASSEMBLE	COOLANT BALL
KMS-T00184	NO	50	25	M8	832-018720	811-104021	811-102102	833-001470
KMS-T00184-IC	SI	50	25	M8	832-018720	811-104021	811-102102	833-001470

COD.	SCREW FOR BALL	CENTRAL PIN	SCREW FOR PIN	O RING FOR PIN (54X3)	O RING FOR PIN (44.5X3)	O RING FOR COOLANT (9.25X1.78)
KMS-T00184	811-108018	832-018741	811-101041	823-101077	823-101069	823-101076
KMS-T00184-IC	811-108018	832-018741	811-101041	823-101077	823-101069	823-101076

RADIAL TOOLHOLDER

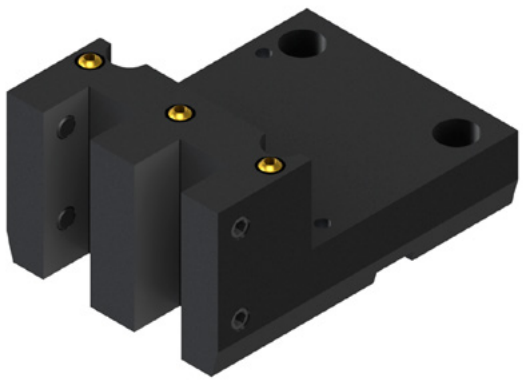

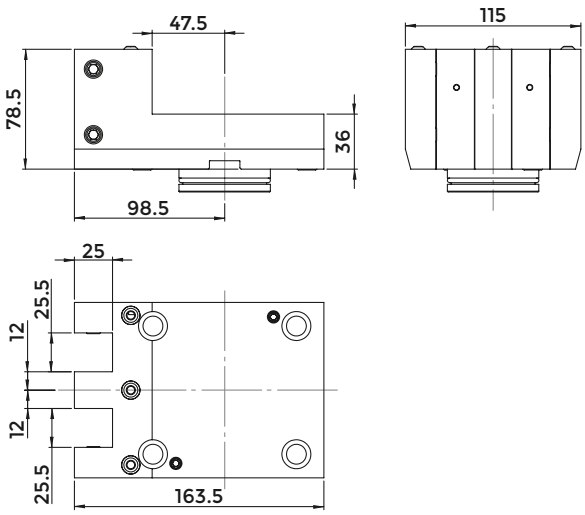

COD.	CLAMPING SCREW	COOLANT BALL	CENTRAL PIN	SCREW FOR PIN	O RING FOR PIN (54X3)	O RING FOR PIN (44.5X3)	O RING FOR COOLANT
137-00373	811-102044	833-001080	832-018741	811-101041	823-101077	823-101069	823-101015

AXIAL TOOLHOLDER

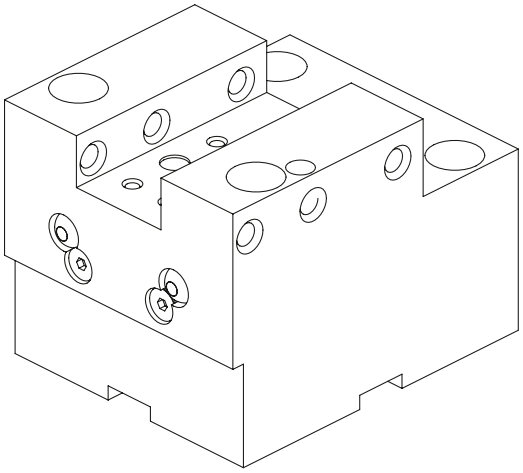

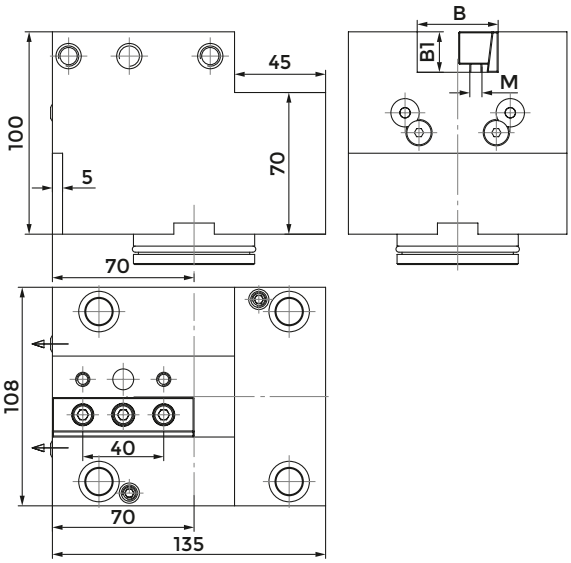

COD.	INTERNAL COOLANT	B	B1	M	CLAMPING PLATE	CLAMPING SCREW	SCREW FOR DISASSEMBLE	COOLANT BALL
KMS-T03005	NO	50	25	M8	832-018720	811-104030	811-102102	833-001470
KMS-T03005-IC	SI	50	25	M8	832-018720	811-104030	811-102102	833-001470

COD.	SCREW FOR BALL	CENTRAL PIN	SCREW FOR PIN	O RING FOR PIN (54X3)	O RING FOR PIN (44.5X3)	O RING FOR COOLANT (9.25X1.78)
KMS-T03005	811-108018	832-018741	811-101041	823-101077	823-101069	823-101076
KMS-T03005-IC	811-108018	832-018741	811-101041	823-101077	823-101069	823-101076

CUT-OFF HOLDER

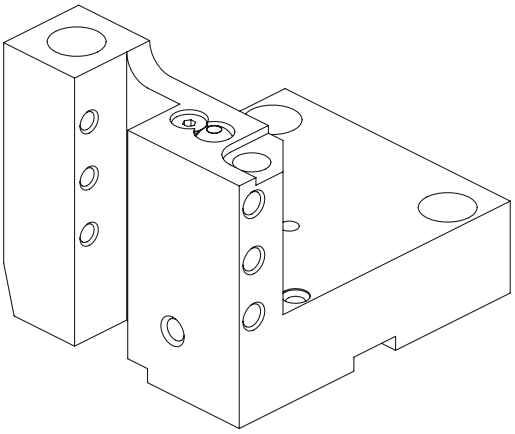

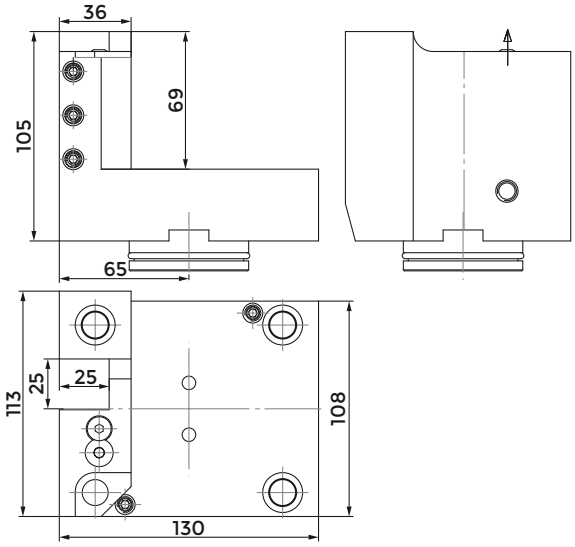

COD.	INTERNAL COOLANT	CLAMPING SCREW	SCREW FOR DISASSEMBLE	COOLANT BALL	SCREW FOR BALL
KMS-T00197	NO	811-104021	811-102032	833-001470	811-108018
KMS-T00197-IC	SI	811-104021	811-102032	833-001470	811-108018

COD.	CENTRAL PIN	SCREW FOR PIN	O RING FOR PIN (54X3)	O RING FOR PIN (44.5X3)	O RING FOR COOLANT (9.25X1.78)
KMS-T00197	832-018741	811-101041	823-101077	823-101069	823-101076
KMS-T00197-IC	832-018741	811-101041	823-101077	823-101069	823-101076

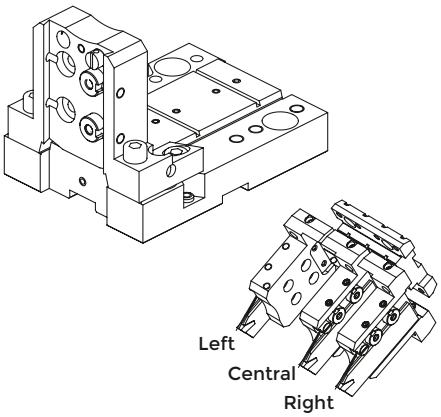

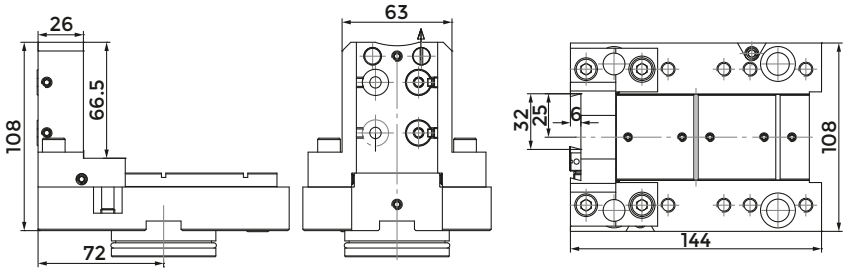

COD.	SCREW FOR DISASSEMBLE	COOLANT NOZZLE	O RING COOLANT BALL	O RING FOR BODY	SHIM PLATE
137-00092	811-102028	833-001490	823-101058	823-101061	832-014449

COD.	SCREW FOR PLATE	CLAMPING PIN	SPRING	CLAMPING SCREW	SCREW
137-00092	811-108037	832-014450	824-300012	811-101028	811-104013

COD.	CENTRAL PIN	SCREW FOR PIN	O RING FOR PIN (54.5X3)	O RING FOR PIN (44.5X3)	O RING FOR COOLANT (9X2)
137-00092	832-018741	811-101041	823-101070	823-101069	823-101015

TOOLHOLDER FOR BORING BAR

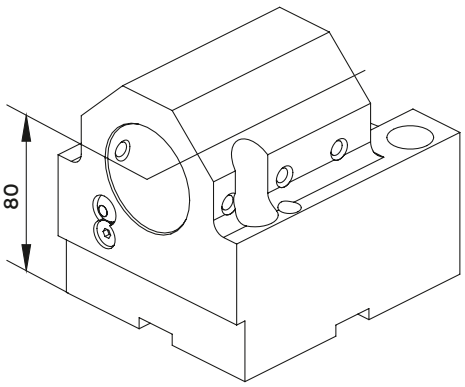

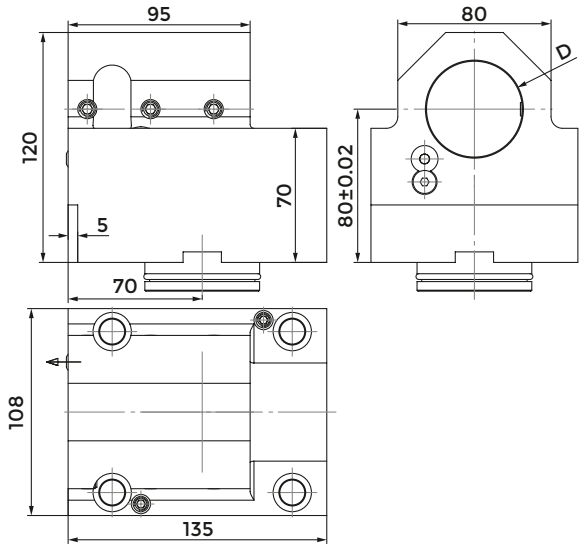

COD.	D	CLAMPING SCREW	SCREW FOR DISASSEMBLE	COOLANT BALL	SCREW FOR BALL
KMS-T10097	40	811-104028	811-102102	833-001470	811-108018
KMS-T10098	50	811-104028	811-102102	833-001470	811-108018

COD.	CENTRAL PIN	SCREW FOR PIN	O RING FOR PIN (54X3)	O RING FOR PIN (44.5X3)	O RING FOR COOLANT (9.25X1.78)
KMS-T10097	832-018741	811-101041	823-101077	823-101069	823-101076
KMS-T10098	832-018741	811-101041	823-101077	823-101069	823-101076

COMBI TOOLHOLDER WITH INTERNAL COOLANT FOR BORING BAR AND INSERT DRILL

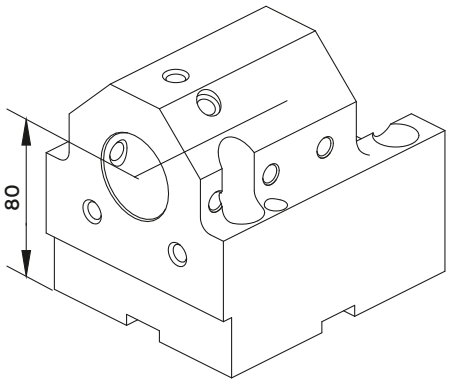

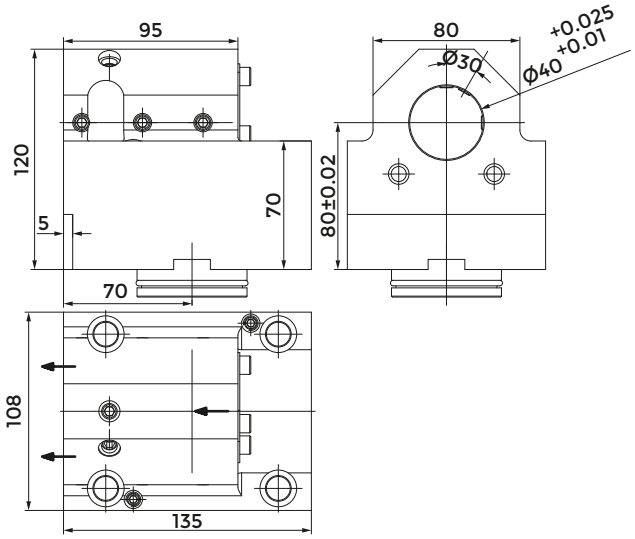

COD.	CLAMPING SCREW	SCREW FOR DISASSEMBLE	COVER F70031	SCREW FOR COVER	CENTRAL PIN
KMS-T13128	811-104028	811-102032	832-003229	811-101028	832-018741

COD.	SCREW FOR PIN	O RING FOR PIN (54X3)	O RING FOR PIN (44.5X3)	O RING FOR COOLANT (9.25X1.78)
KMS-T13128	811-101041	823-101077	823-101069	823-101076

DOUBLE TOOLHOLDER FOR BORING BAR

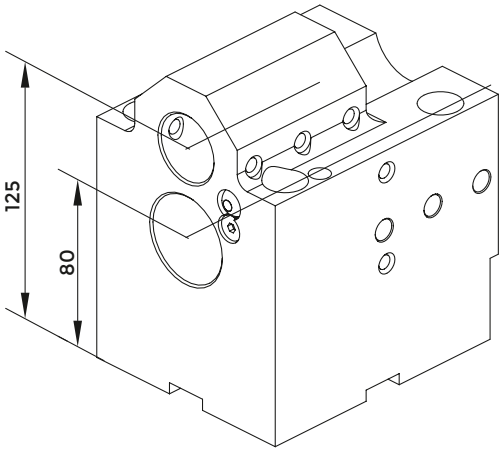

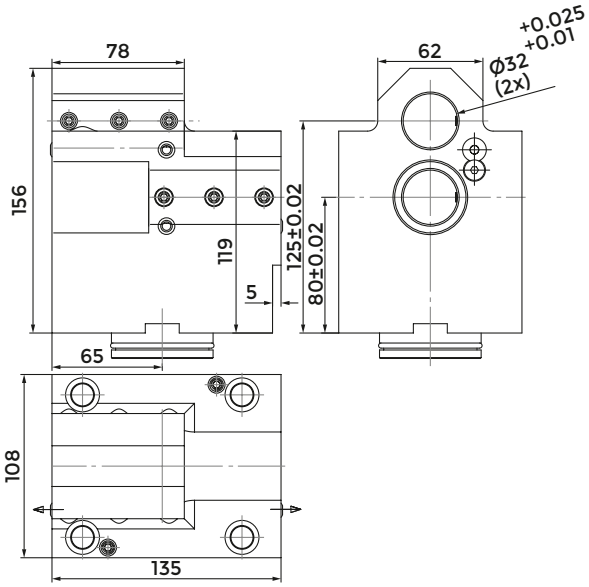

COD.	CLAMPING SCREW	SCREW FOR DISASSEMBLE	COOLANT BALL	SCREW FOR BALL	CENTRAL PIN
KMS-T10096	811-104021	811-102102	833-001470	811-108018	832-018741

COD.	SCREW FOR PIN	O RING FOR PIN (54X3)	O RING FOR PIN (44.5X3)	O RING FOR COOLANT (9.25X1.78)
KMS-T10096	811-101041	823-101077	823-101069	823-101076

POLYGONAL TOOLHOLDER

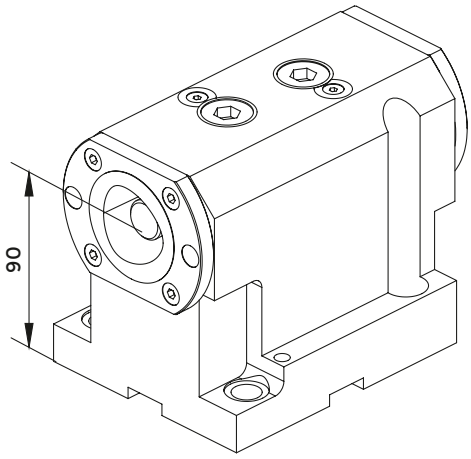

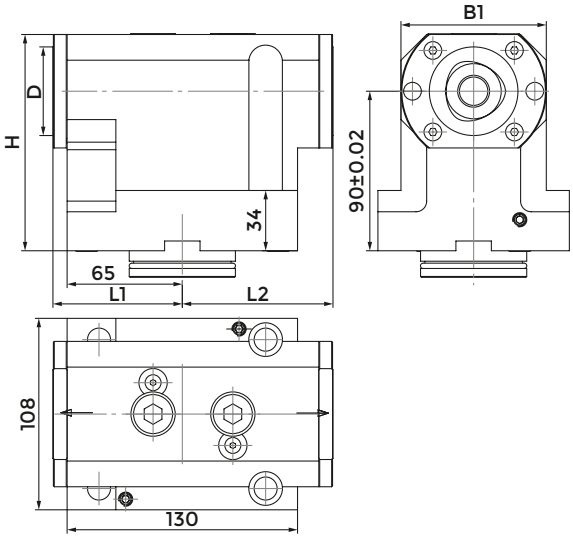

COD.	POLYGONAL	D	D	H	L1	B1	CLAMPING UNIT	SCREW FOR DISASSEMBLE	CENTRAL PIN
137-00185	C50	50	122	73	85	82	CXC50-10	811-102032	832-018741

COD.	SCREW FOR PIN	O RING FOR PIN (54X3)	O RING FOR PIN (44.5X3)	COOLANT PLUG (9.25X1.78)
137-00185	811-101041	823-101077	823-101069	823-101076

POLYGONAL TOOLHOLDER

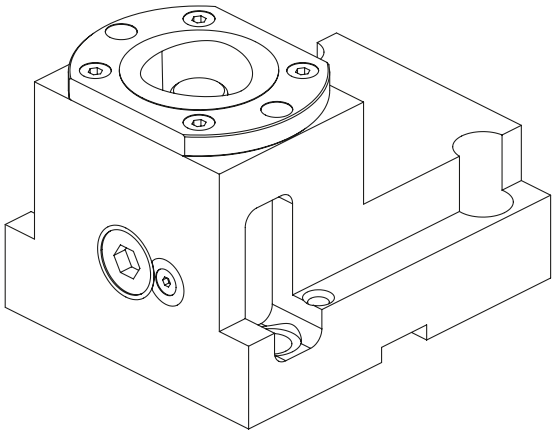

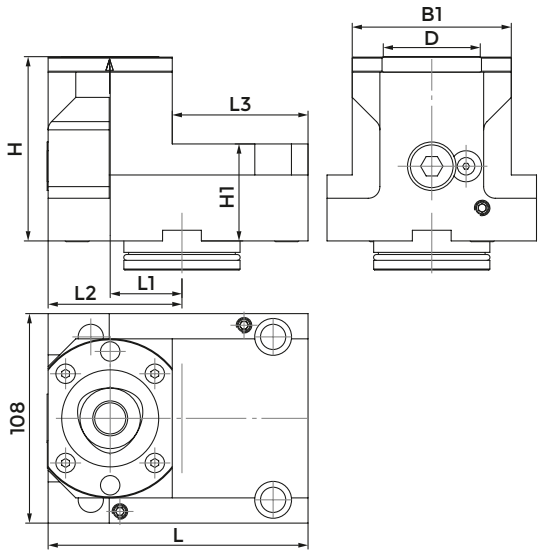

COD.	POLYGONAL	D	H	H1	L	L1	L2	L3	B1	CLAMPING UNIT	SCREW FOR DISASSEMBLE
137-00241	C40	40	80	42	130	41	65	82	67	CXC40-10	811-102032

COD.	CENTRAL PIN	SCREW FOR PIN	O RING FOR PIN (54X3)	O RING FOR PIN (44.5X3)	O RING FOR COOLANT (9.25X1.78)
137-00241	832-018741	811-101041	823-101077	823-101069	823-101076

PROTECTION COVER

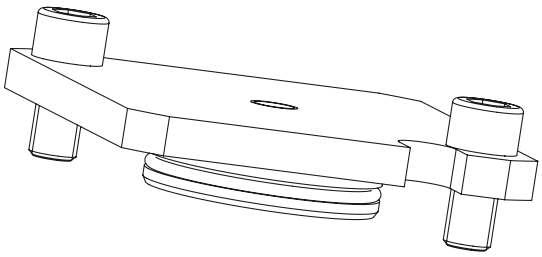

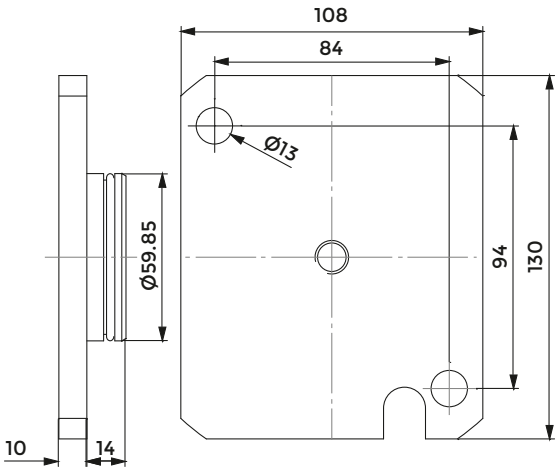

COD.	O RING
137-00246	823-101077

DMG MORI - CMZ - GOODWAY

Index of machines p. 360

DIRECT MONTING ON TURRET

B27008 - L=110
B27037 - L=70

B27007 - L=110
B27036 - L=70

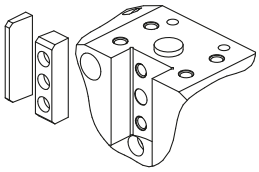

FACE AND O.D. CUTTING HOLDER

KMS-T00076
25x25 mm
(20x20 mm con
COD. 832-01472)

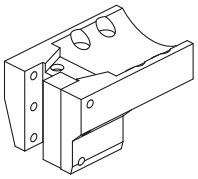

FACE AND O.D. CUTTING HOLDER

KMS-T00174
25x25 mm
(20x20 mm con
COD. 832-01472)

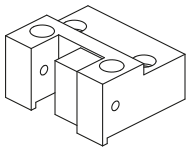

QUALIFIED TOOL

FACE AND O.D. CUTTING HOLDER

KMS-T00158
25x25 mm
(20x20 mm con
COD. 832-014702)
KMS-T00158-IC
25x25 mm
(20x20 mm con
COD. 832-014702)

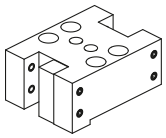

FACE AND O.D. CUTTING HOLDER

KMS-T00082
25x25 mm
(20x20 mm con
COD. 832-014702)

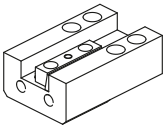

FACE AND O.D. CUTTING HOLDER (also for machine CLB2000B - MT2000 - ZT2500 - DURATURN2550)
KMS-T00068
25x25 mm
(20x20 mm con
COD. 832-014702)

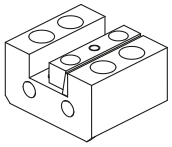

CUT-OFF HOLDER

KMS-T00156
25x25 mm
(20x20 mm con
COD. 832-014702)

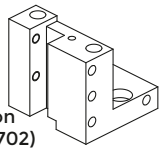

CUT-OFF TOOL

CUT-OFF HOLDER

128-42522
(32 mm)

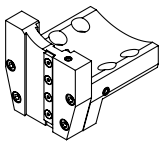

TOOLHOLDER FOR BORING BAR

KMS-T10036 (Ø40 mm)
KMS-T10044 (Ø50 mm)

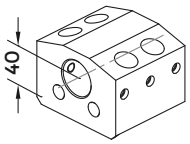

TOOLHOLDER FOR BORING BAR

KMS-T10038 (Ø40 mm)
128-22519 (Ø50 mm)

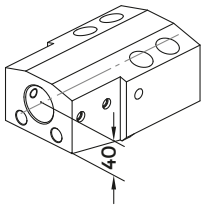

COMBI TOOLHOLDER WITH INTERNAL COOLANT FOR BORING BAR AND INSERT DRILL

KMS-T13064
Ø40 mm

COVER: 832-003063

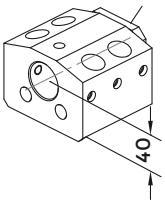

TOOLHOLDER FOR BORING BAR

KMS-T100860
Ø32 mm

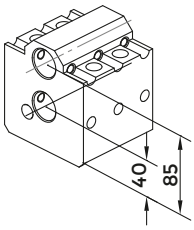

TOOLHOLDER FOR BORING BAR

KMS-T10208
Ø32 mm

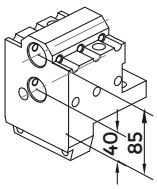

ACCESSORIES

BORING BAR SLEEVE
p. 726

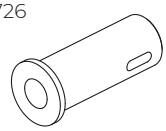

D40

8960 <MT3>
8959 <MT2>

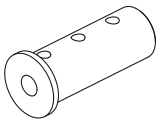

D40

5906 (Ø32 mm)
5905 (Ø25 mm)
5904 (Ø20 mm)
5903 (Ø16 mm)
5902 (Ø12 mm)
5901 (Ø10 mm)
5900 (Ø8 mm)

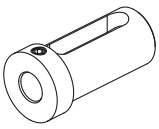

D40

8768 (Ø16 mm)
8770 (Ø20 mm)
8771 (Ø25 mm)
8772 (Ø40 mm)

D50

8773 (Ø25 mm)
8774 (Ø32 mm)
8775 (Ø40 mm)

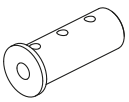

8946 (Ø25 mm)
8945 (Ø20 mm)
8944 (Ø16 mm)
8943 (Ø12 mm)
8942 (Ø10 mm)
8941 (Ø8 mm)

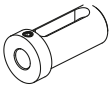

8764 (Ø16 mm)
8766 (Ø20 mm)
8767 (Ø25 mm)

FAST-IN p. 506
DRIVEN TOOLS p. 302

POLYGONAL TOOL HOLDER

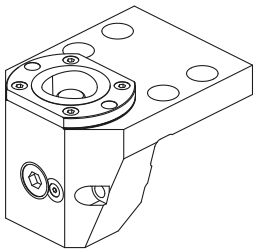

128-12527 (C40)
128-12513 (C50)

POLYGONAL TOOL HOLDER

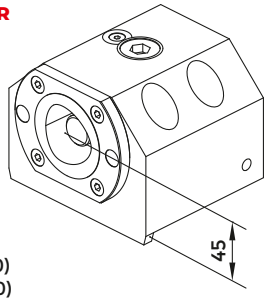

128-12526 (C40)
128-12509 (C50)

CONNECTION

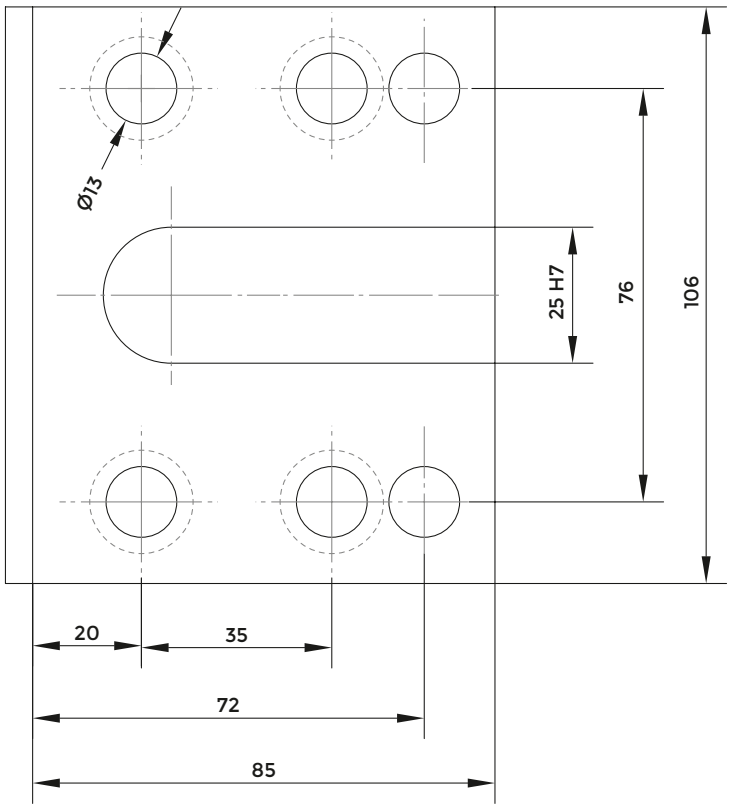

RADIAL TOOLHOLDER

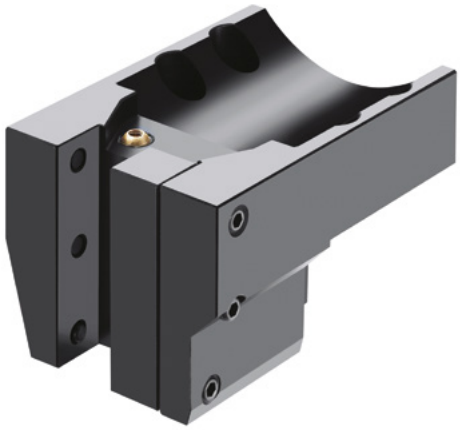

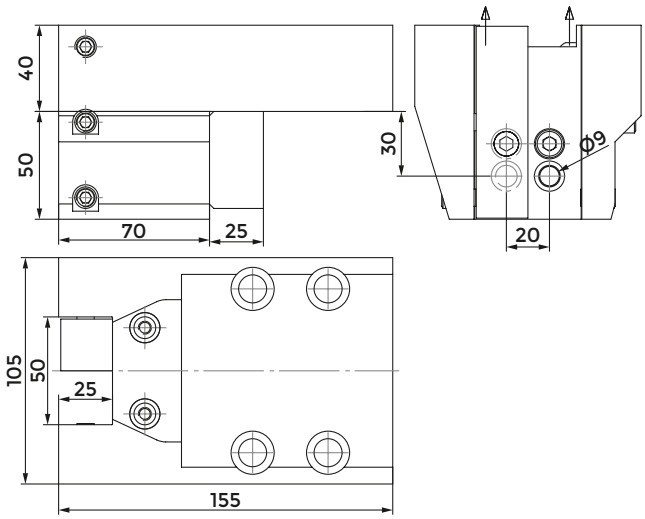

COD.	CLAMPING SCREW 1 (M10X25)	CLAMPING SCREW 2 (M10X16)	CLAMPING PLATE	COOLANT NOZZLE	SPACER	SCREW FOR SPACER
			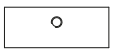			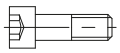
KMS-T00076	811-104030	811-104028	832-002117	833-001090	832-002116	811-101046

RADIAL TOOLHOLDER

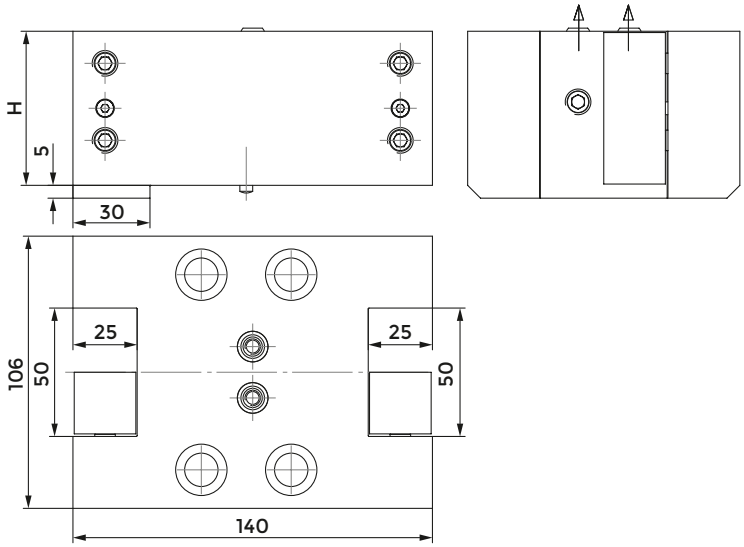

COD.	INTERNAL COOLING	H	CLAMPING SCREW	CLAMPING PLATE	SCREW FOR CLAMPING PLATE	SPRING FOR CLAMPING PLATE	COOLANT NOZZLE	PIN
KMS-T00158	NO	60	811-104030	832-002095	811-302004	824-101010	833-001080	815-220008
KMS-T00158-IC	SI	65	-	832-007460	-	-	833-001110	815-220008

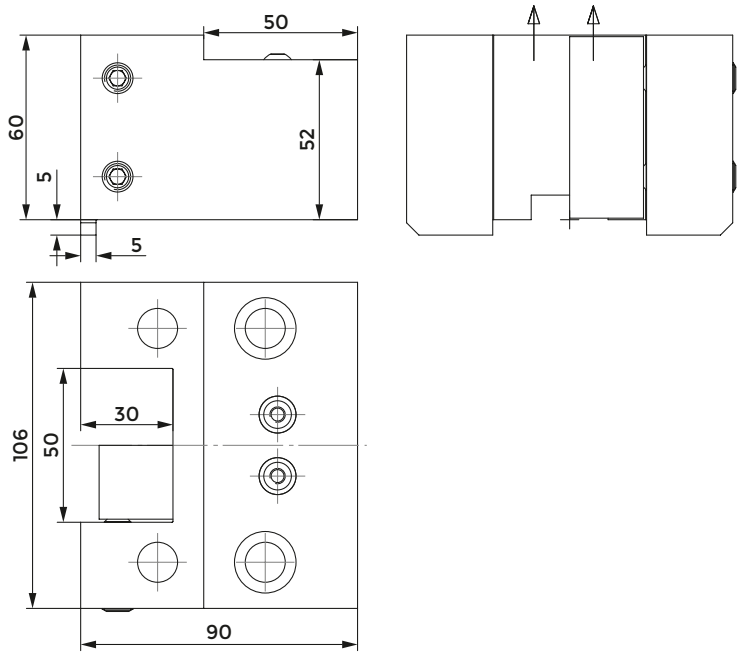

COD.	CLAMPING SCREW	CLAMPING PLATE	COOLANT NOZZLE
KMS-T00174	811-102040	832-002095	833-001080

AXIAL TOOLHOLDER

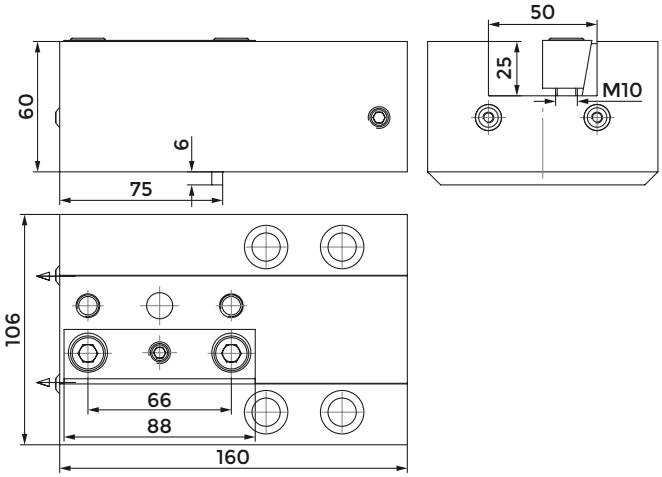

COD.	CLAMPING PLATE	COOLNT NOZZLE
KMS-T00082	832-007500	833-001080

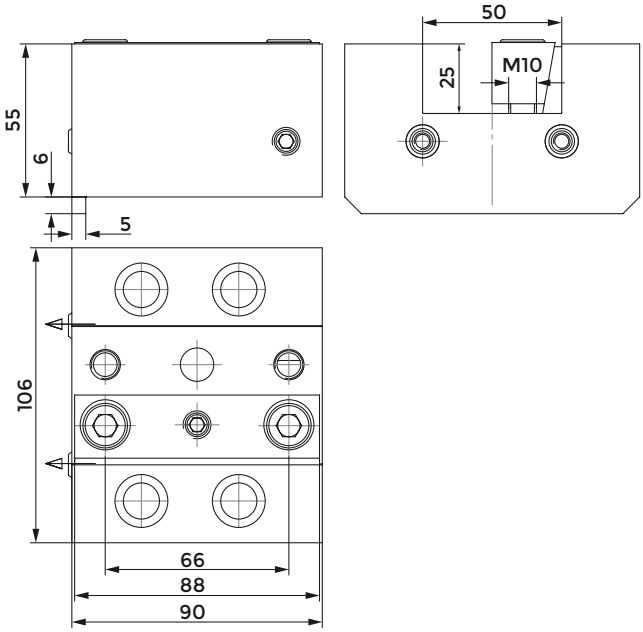

COD.	CLAMPING PLATE	COOLANT NOZZLE
KMS-T00068	832-007500	833-001080

CUT-OFF HOLDER

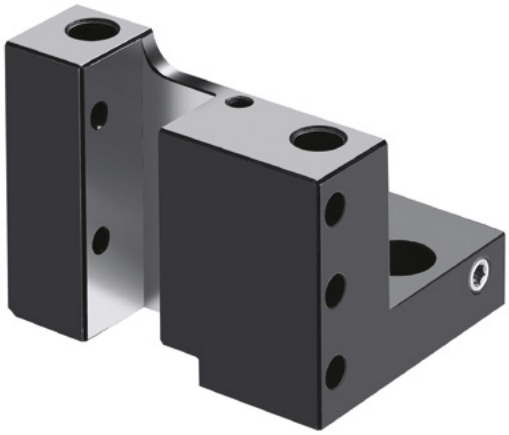

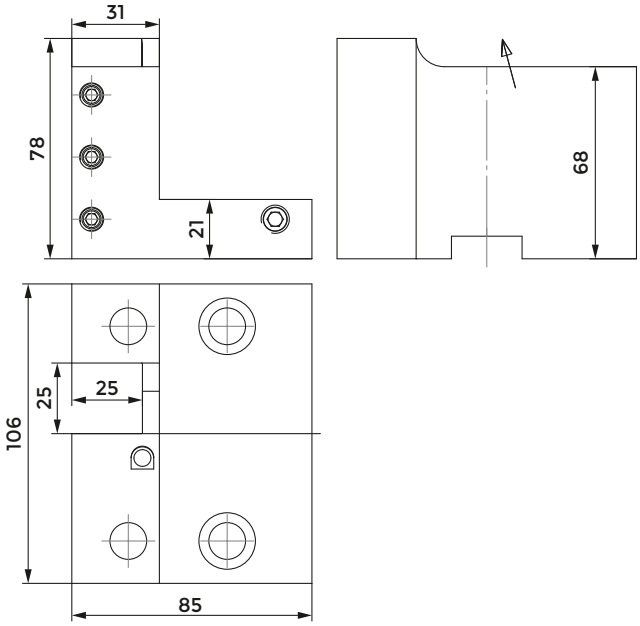

COD.	CLAMPING SCREW
KMS-T00156	811-104023

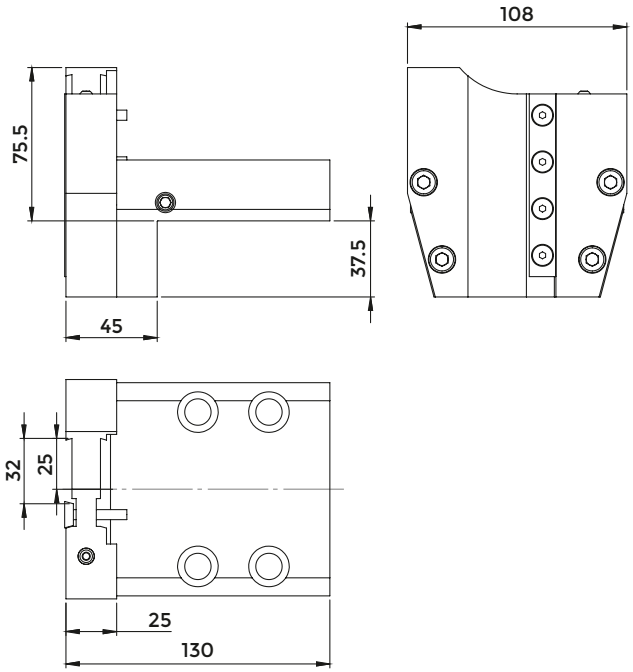

COD.	CLAMPING PLATE	CLAMPING SCREW	COOLANT NOZZLE
	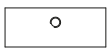	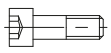	
128-42522	832-002213	811-108017	833-001060

TOOLHOLDER FOR BORING BAR

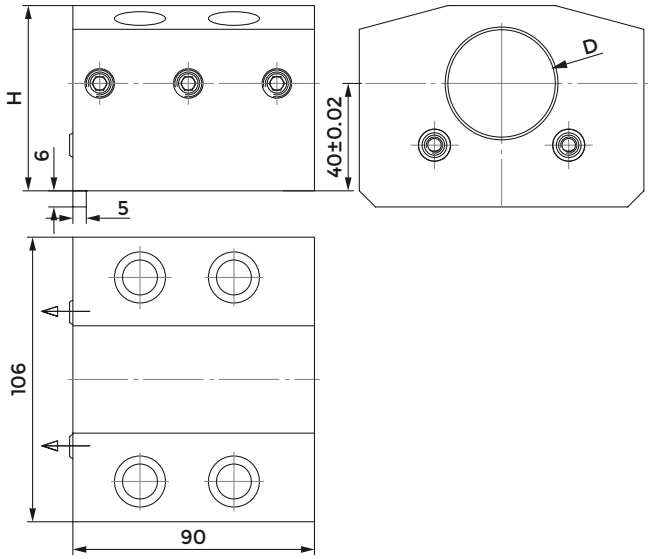

COD.	D	H	CLAMPING SCREW	COOLANT NOZZLE
KMS-T10036	40	69	811-102039	833-001080
KMS-T10044	50	74	811-102038	833-001080

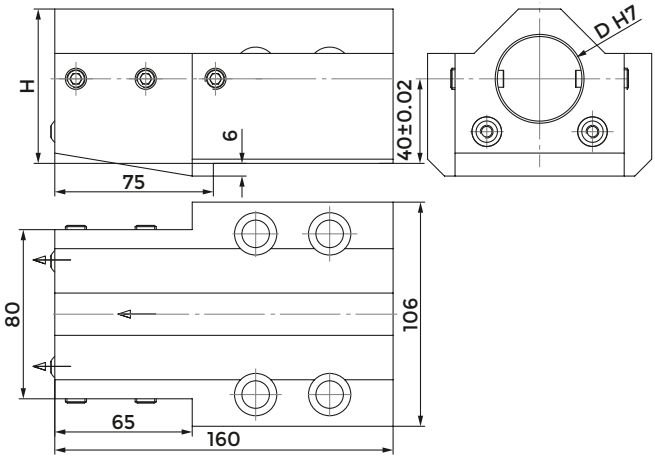

COD.	D	H	CLAMPING SCREW	CLAMPING SCREW	COOLANT NOZZLE
KMS-T10038	40	73	811-104030	-	833-001090
128-22519	50	76	-	811-102043	833-001090

COMBI TOOLHOLDER WITH INTERNAL COOLANT FOR BORING BAR AND INSERT DRILL

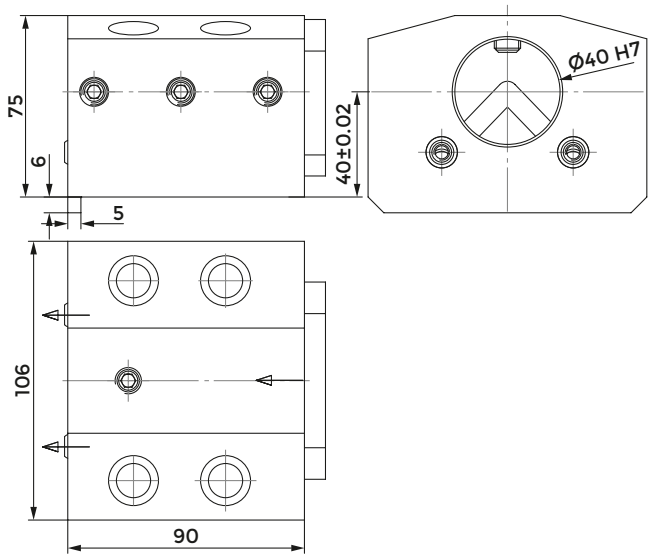

COD.	CLAMPING SCREW 1 (M10X25)	CLAMPING SCREW 2 (M10X14)	COOLANT NOZZLE	COVER	SCREW FOR COVER
					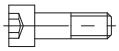
KMS-T13064	811-102039	811-102060	833-001080	832-003063	811-101016

TOOLHOLDER FOR BORING BAR

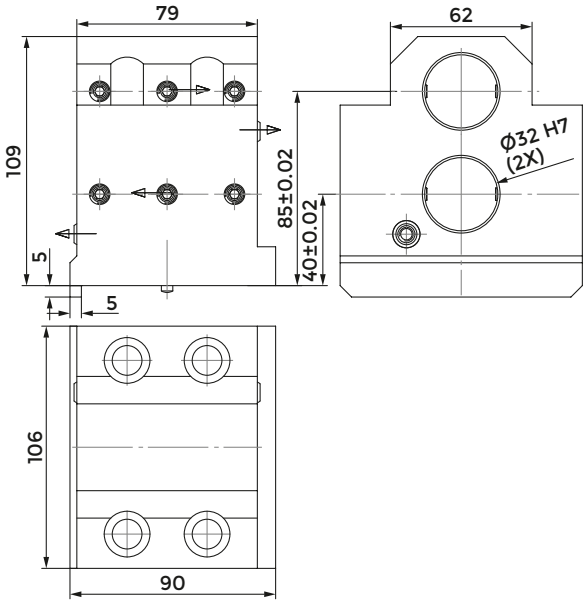

COD.	CLAMPING SCREW	COOLANT NOZZLE	PIN
			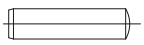
KMS-T100860	811-104021	833-001080	815-210170

TOOLHOLDER FOR BORING BAR

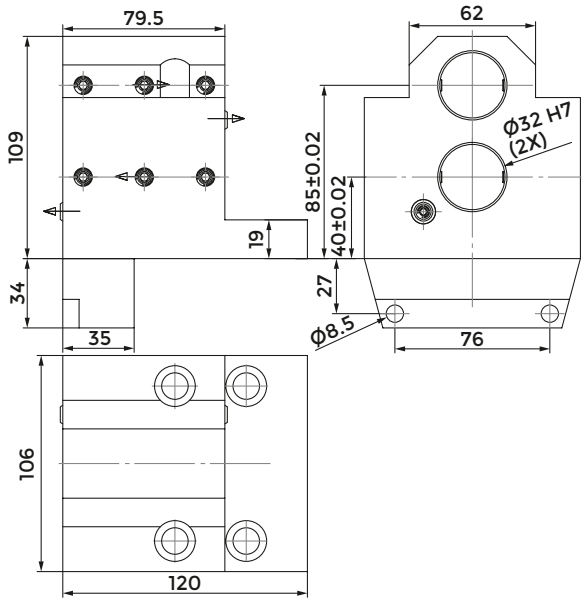

COD.	CLAMPING SCREW	COOLANT NOZZLE
KMS-T10208	811-104021	833-001080

POLYGONAL TOOLHOLDER

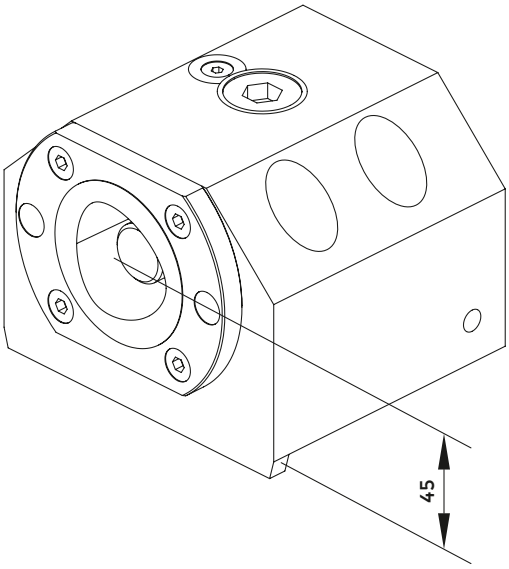

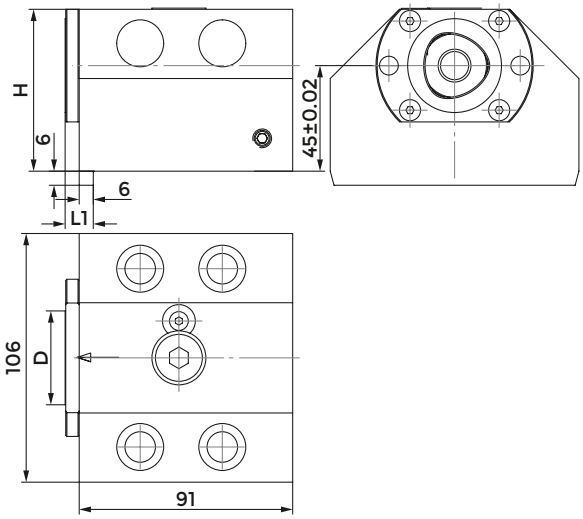

COD.	POLYGONAL	D	H	L1	CLAMPING UNIT
128-12526	C40	40	69	12	CXC40-10
128-12509	C50	50	77	14	CXC50-10

POLYGONAL TOOLHOLDER

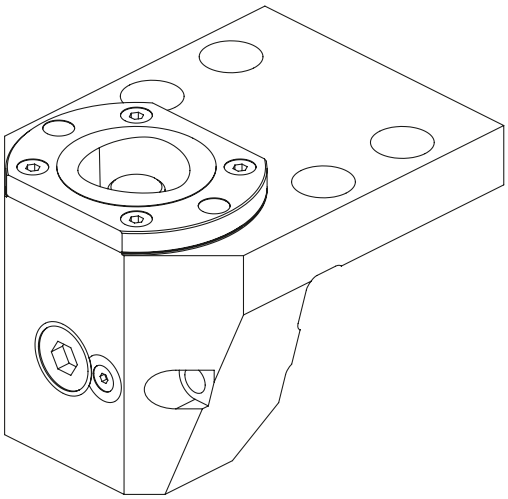

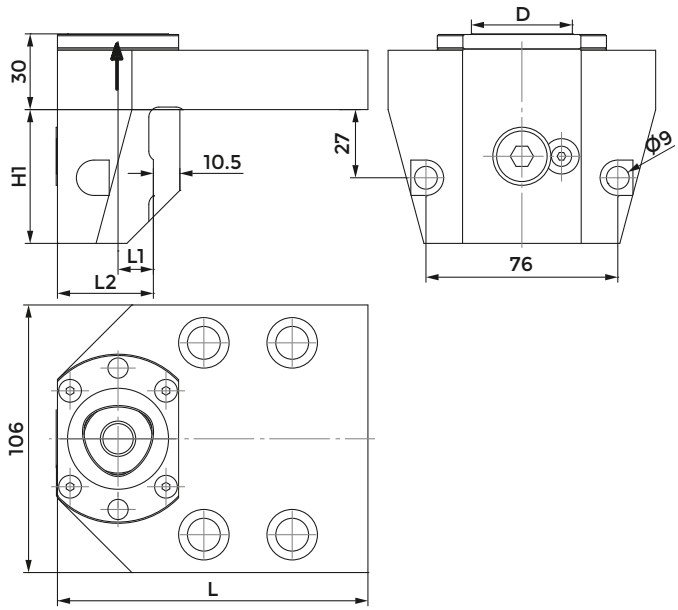

COD.	POLYGONAL	D	H1	L	L1	L2	CLAMPING UNIT
128-12527	C40	40	53	123	14	38	CXC40-10
128-12513	C50	50	65	139	22	54	CXC50-10

DMG MORI - CMZ

Index of machines p. 360

DIRECT MONTING ON TURRET

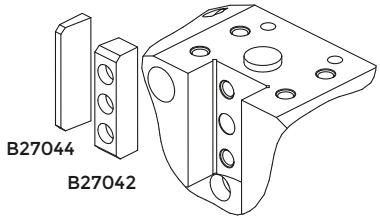

FACE AND O.D. CUTTING HOLDER (ONLY FOR CL150)

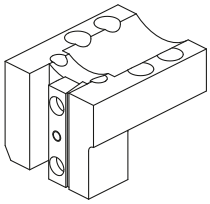

KMS-T00078
20x20 mm

FACE AND O.D. CUTTING HOLDER

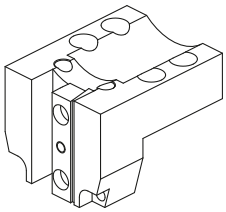

KMS-T00146
20x20 mm

QUALIFIED TOOL

FACE AND O.D. CUTTING HOLDER

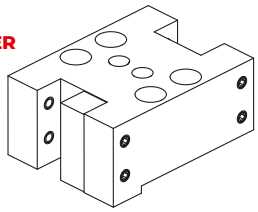

KMS-T00108
20x20 mm

FACE AND O.D. CUTTING HOLDER

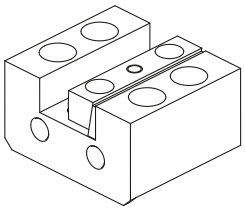

KMS-T00080
20x20 mm

TOOLHOLDER FOR BORING BAR

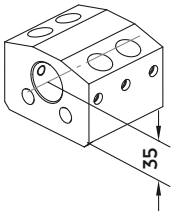

KMS-T10046
Ø32 mm

TOOLHOLDER FOR BORING BAR

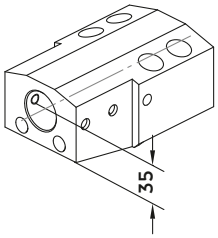

KMS-T10052
Ø32 mm

COMBI TOOLHOLDER WITH INTERNAL COOLANT FOR BORING BAR AND INSERT DRILL

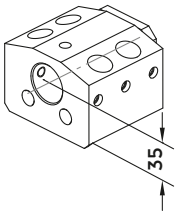

KMS-T13066
Ø32 mm

TOOLHOLDER FOR BORING BAR

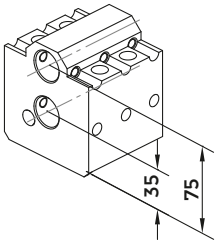

KMS-T10082
Ø25 mm

ACCESSORIES

BORING BAR SLEEVE

p. 726

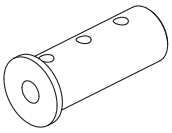

8946 (Ø25 mm)
8945 (Ø20 mm)
8944 (Ø16 mm)
8943 (Ø12 mm)
8942 (Ø10 mm)
8941 (Ø8 mm)

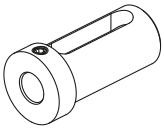

8764 (Ø16 mm)
8766 (Ø20 mm)
8767 (Ø25 mm)

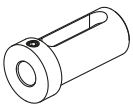

165-62545 (Ø12 mm)
165-62547 (Ø16 mm)
165-62549 (Ø20 mm)

CONNECTION

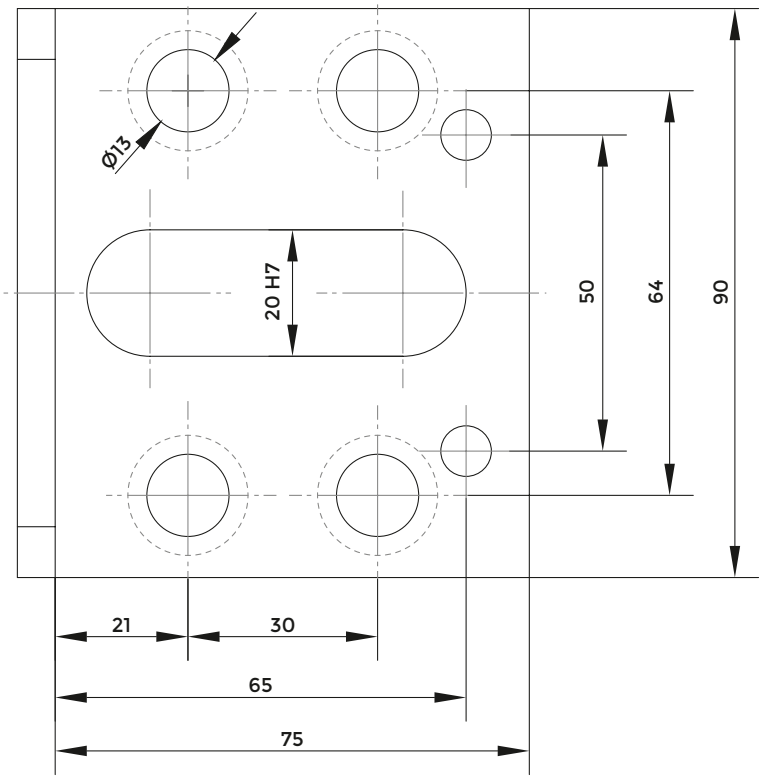

RADIAL TOOLHOLDER

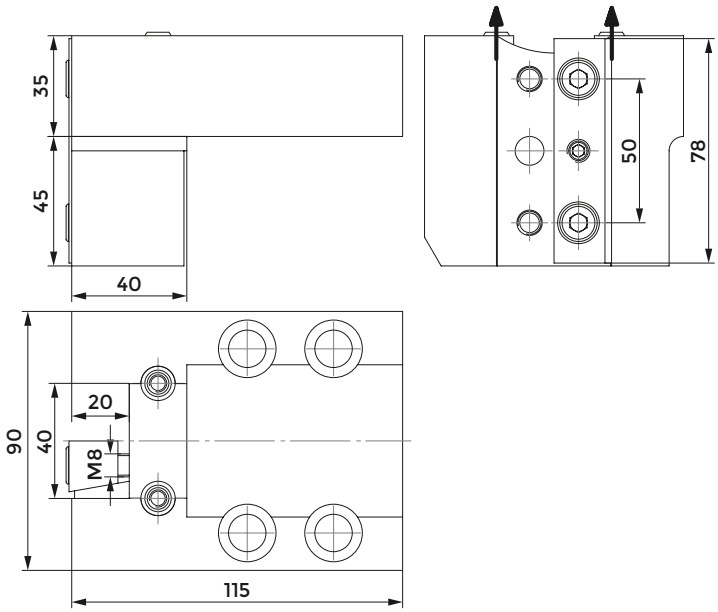

COD.	CLAMPING PLATE	COOLANT NOZZLE
KMS-T00078	832-007200	833-001080

RADIAL TOOLHOLDER

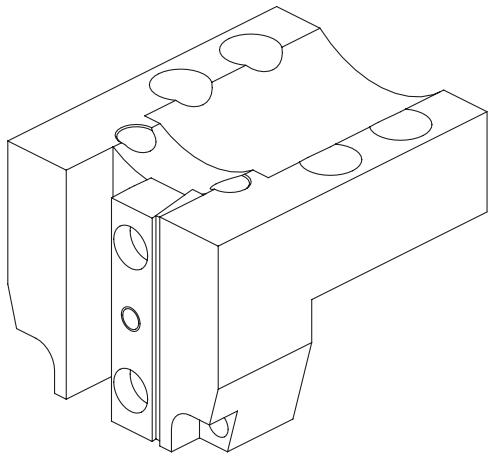

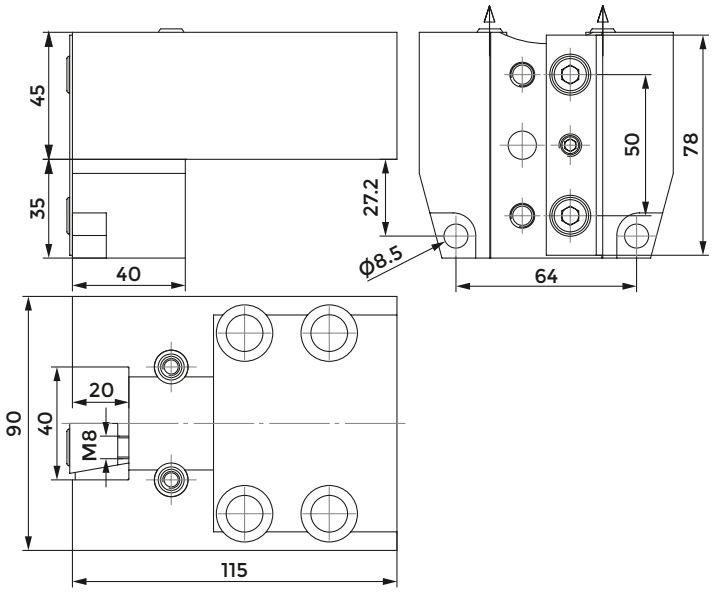

COD.	CLAMPING PLATE	COOLANT NOZZLE
KMS-T00146	832-007200	833-001080

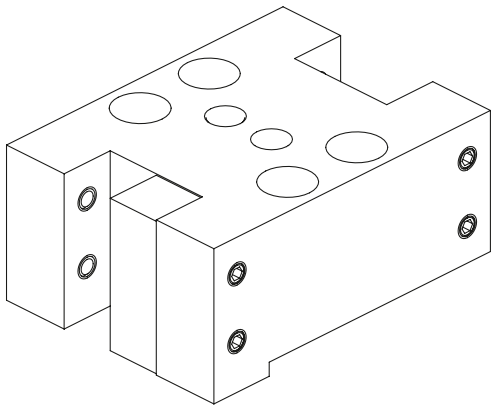

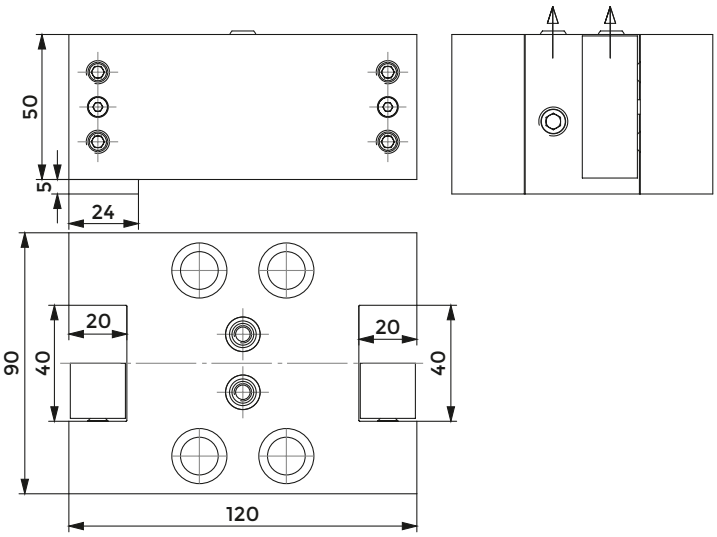

COD.	CLAMPING SCREW	CLAMPING PLATE	SPRING FOR CLAMPING PLATE	SCREW FOR CLAMPING PLATE	COOLANT NOZZLE
				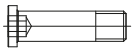	
KMS-T00108	811-102031	832-002096	824-101010	811-302004	833-001080

AXIAL TOOLHOLDER

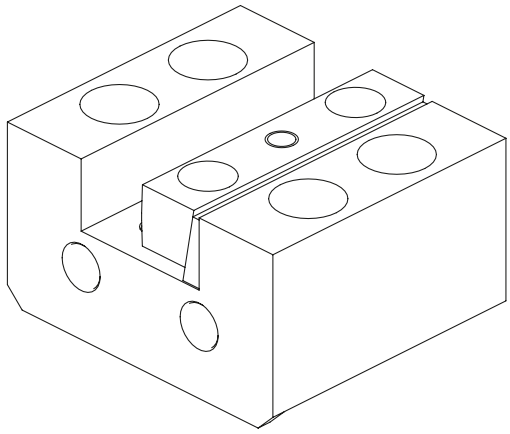

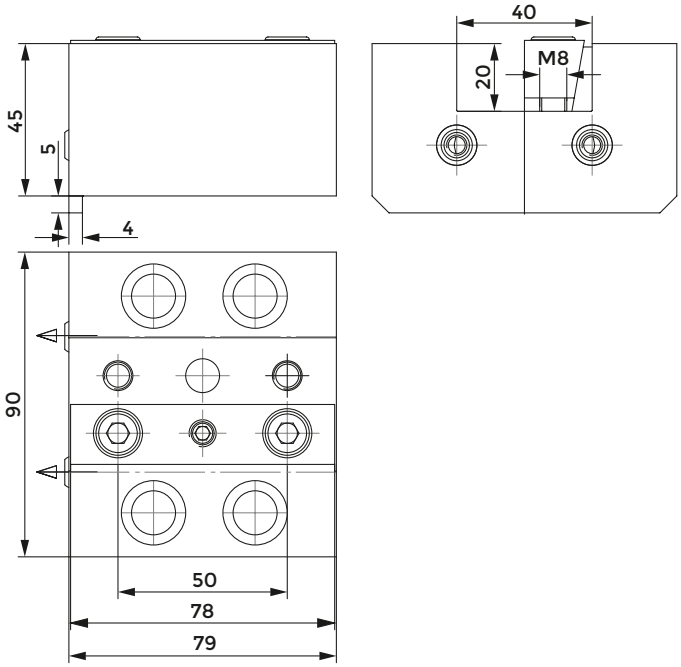

COD.	CLAMPING PLATE	COOLANT NOZZLE
KMS-T00080	832-007200	833-001080

TOOLHOLDER FOR BORING BAR

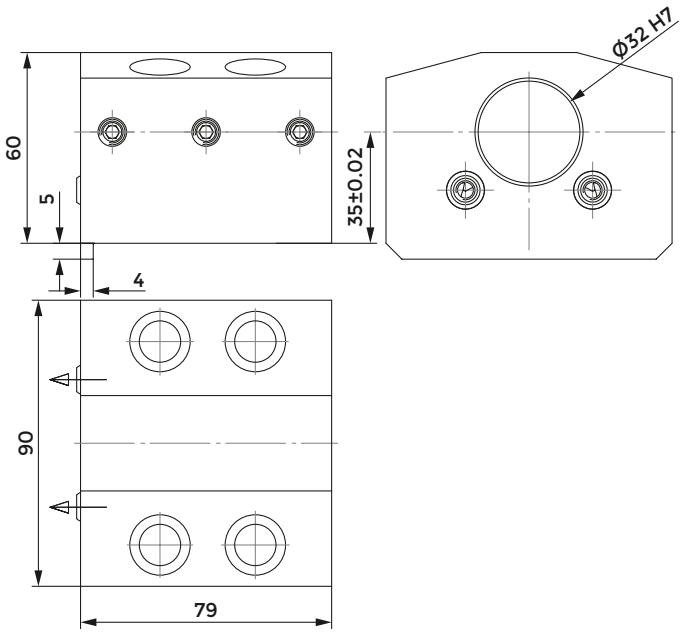

COD.	CLAMPING PLATE	COOLANT NOZZLE
KMS-T10046	811-102031	833-001080

TOOLHOLDER FOR BORING BAR

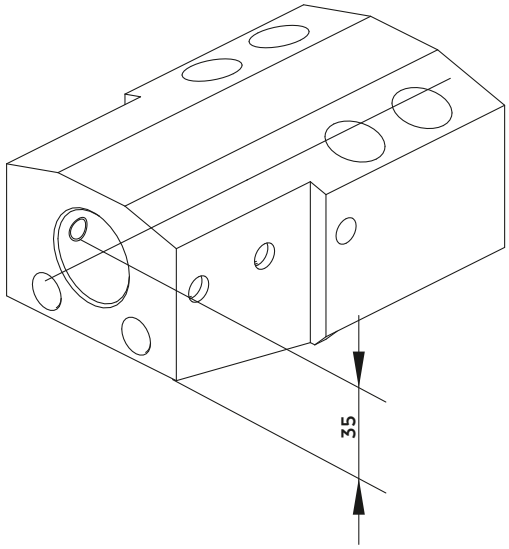

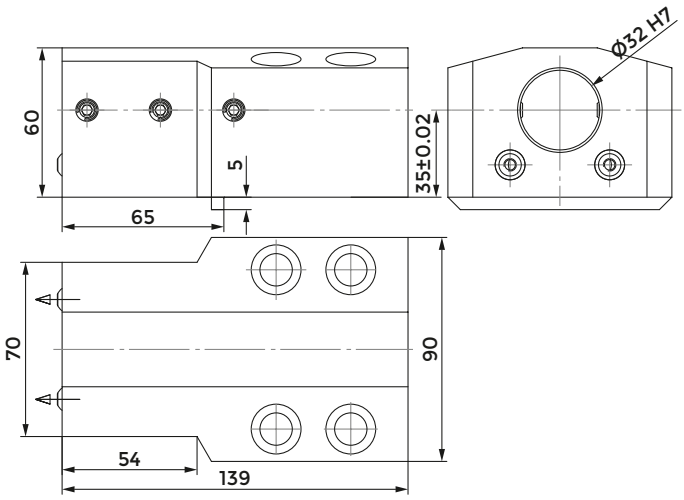

COD.	CLAMPING SCREW	COOLANT NOZZLE
KMS-T10052	811-102030	833-001080

COMBI TOOLHOLDER WITH INTERNAL COOLANT FOR BORING BAR AND INSERT DRILL

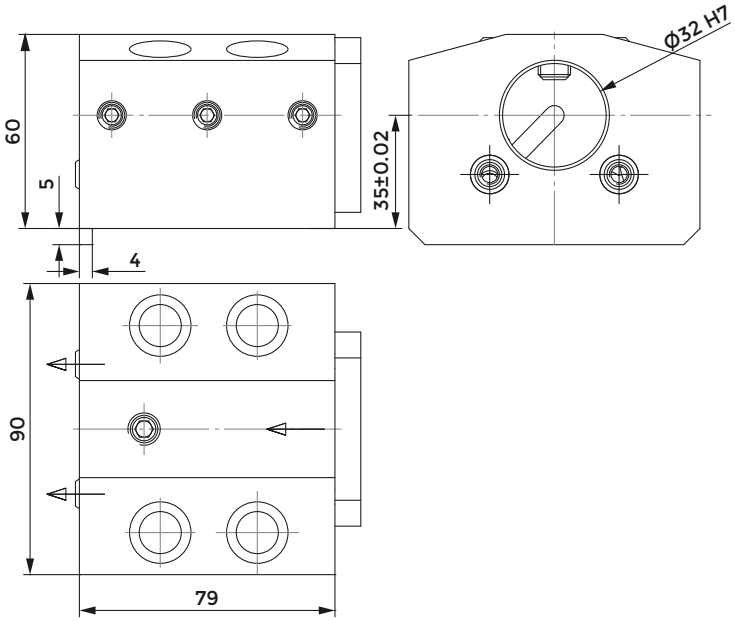

COD.	CLAMPING SCREW 1 (M8X25)	CLAMPING SCREW 2 (M10X14)	COOLANT NOZZLE	COVER	SCREW FOR COVER
					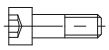
KMS-T13066	811-102031	811-102060	833-001080	832-003062	811-101016

TOOLHOLDER FOR BORING BAR

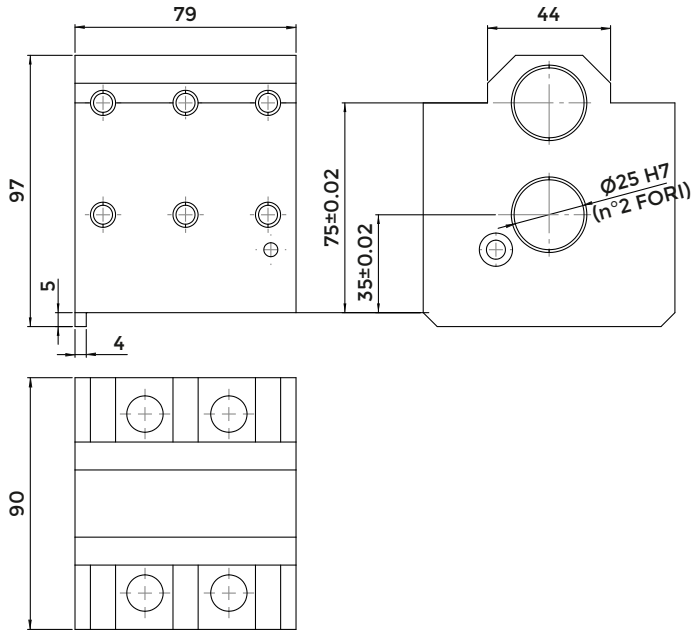

COD.	CLAMPING SCREW	COOLANT NOZZLE
KMS-T10082	811-104021	833-001080

OKUMA (VDI30)

Index of machines p. 362

AXIAL TOOLHOLDER

112-330080
20x20 mm

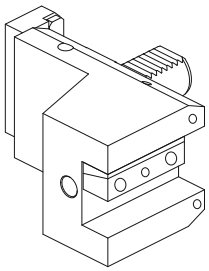

QUALIFIED TOOL

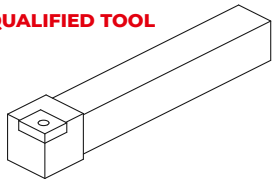

CUT-OFF HOLDER

117-53001 - 26 mm

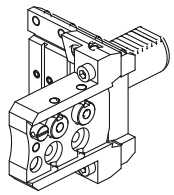

CUT-OFF TOOL

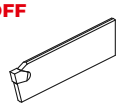

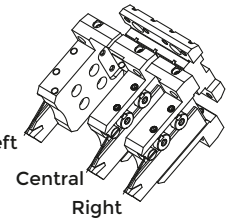

ACCESSORIES

COMBI TOOLHOLDER WITH INTERNAL COOLANT FOR BORING BAR AND INSERT DRILL

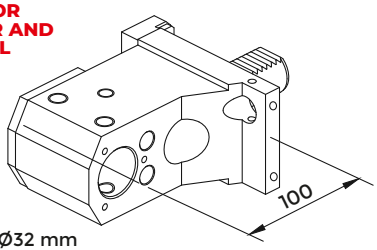

115-230460 - Ø32 mm

BORING BAR SLEEVE

p. 726

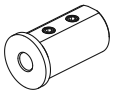

9607 (Ø8 mm)
9608 (Ø10 mm)
9609 (Ø12 mm)

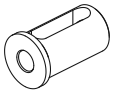

9611 (Ø16 mm)
9613 (Ø25 mm)
9614 (Ø20 mm)

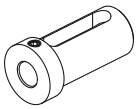

8764 (Ø16 mm)
8766 (Ø20 mm)
8767 (Ø25 mm)

AXIAL TOOLHOLDER

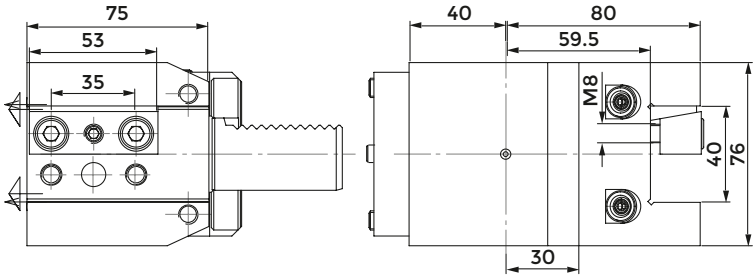

COD.	CLAMPING PLATE	COOLANT NOZZLE	STOP PLATE	SCREW FOR STOP PLATE	STOP SCREW	O RING VDI30
112-330080	832-007190	833-001080	832-018380	811-101038	811-102020	823-101017

CUT-OFF HOLDER

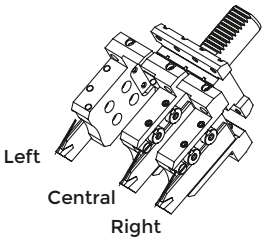

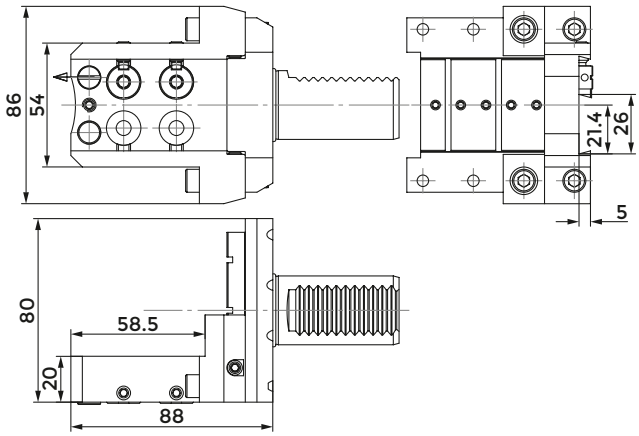

COD.	COOLANT NOZZLE	O RING FOR COOLANT NOZZLE	O RING FOR BODY	O RING VDI30	SHIM PLATE
117-53001	833-001490	823-101058	823-101061	823-101017	832-014448

COD.	SCREW FOR PLATE	CLAMPING PIN	SPRING	CLAMPING SCREW	SCREW
117-53001	811-108037	832-014447	824-300012	811-101027	811-104013

COMBI TOOLHOLDER WITH INTERNAL COOLANT FOR BORING BAR AND INSERT DRILL

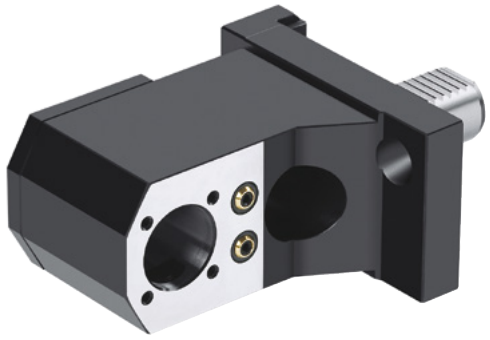

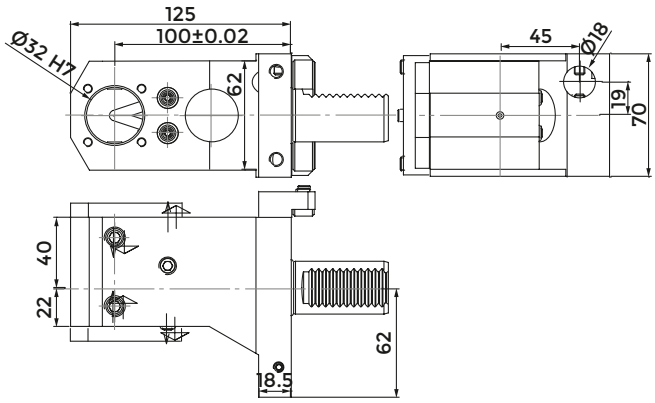

COD.	CLAMPING SCREW	COOLANT NOZZLE	STOP PLATE	SCREW FOR STOP PLATE
				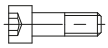
115-230460	811-102043	833-001080	832-018380	811-101038

COD.	STOP SCREW	COVER	SCREW FOR COVER	O RING VDI30
			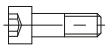	
115-230460	811-102020	832-003212	811-101016	823-101017

OKUMA (VDI40)

Index of machines p. 362

AXIAL TOOLHOLDER

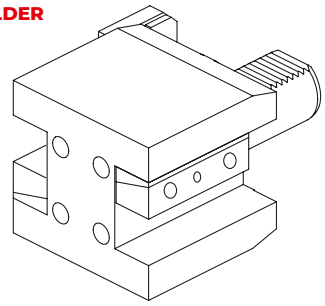

112-14009
25X25 mm

QUALIFIED TOOL

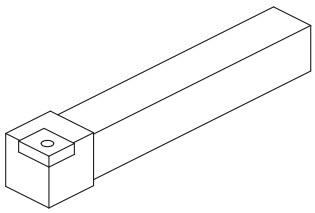

COMBI TOOLHOLDER WITH INTERNAL COOLANT FOR BORING BAR AND INSERT DRILL

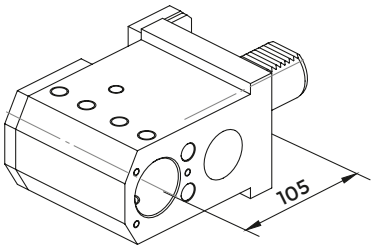

115-240810 - Ø40 mm

ACCESSORIES

BORING BAR SLEEVE

p. 724

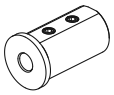

9615 (Ø8 mm)
9616 (Ø10 mm)
9617 (Ø12 mm)

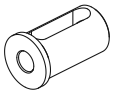

9619 (Ø16 mm)
9621 (Ø20 mm)
9622 (Ø25 mm)
9623 (Ø32 mm)

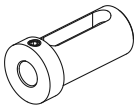

8768 (Ø16 mm)
8770 (Ø20 mm)
8771 (Ø25 mm)
8772 (Ø32 mm)

AXIAL TOOLHOLDER

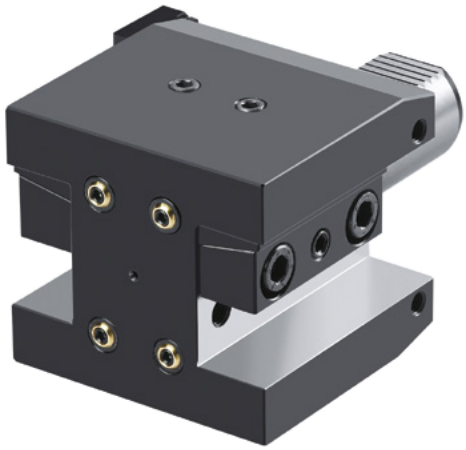

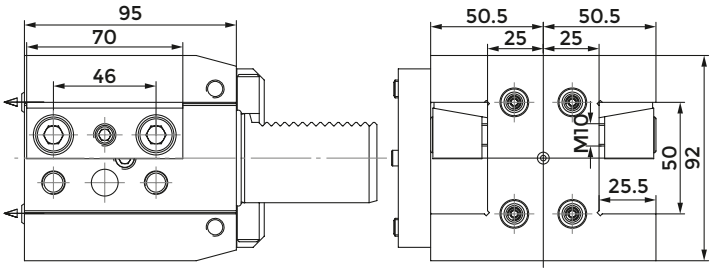

COD.	CLAMPING PLATE	COOLANT NOZZLE	STOP PLATE	SCREW FOR STOP PLATE	O RING VDI40
112-14009	832-007010	833-001080	832-020730	811-101039	823-101036

COMBI TOOLHOLDER WITH INTERNAL COOLANT FOR BORING BAR AND INSERT DRILL

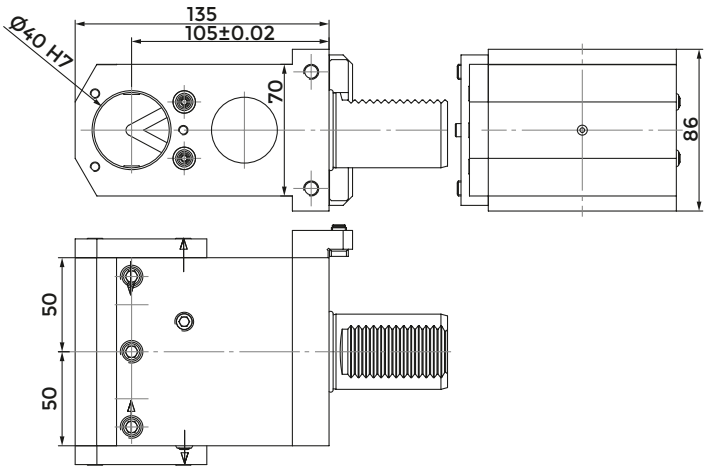

COD.	CLAMPING SCREW	COOLANT NOZZLE	STOP PLATE	SCREW FOR STOP PLATE
115-240810	811-102043	833-001080	832-020730	811-101039

COD.	COVER	SCREW FOR COVER	O RING VDI40
115-240810	832-003104	811-101017	823-101036

OKUMA - HAAS

Index of machines p. 362

FACE AND O.D. CUTTING HOLDER

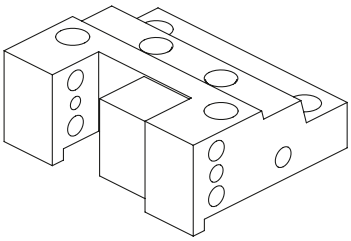

128-420110 - 25x25 mm

FACE AND O.D. CUTTING HOLDER

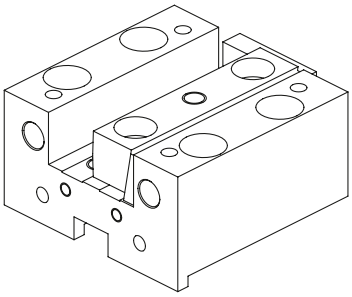

128-32001 - 25x25 mm

QUALIFIED TOOL

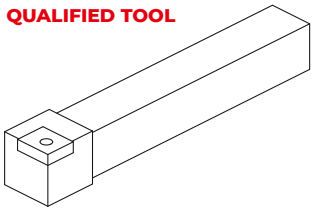

POLYGONAL TOOL HOLDER

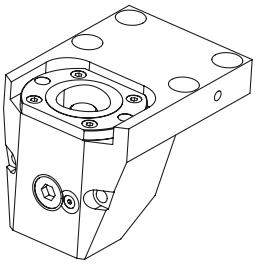

128-12059 (C50)

POLYGONAL TOOL HOLDER

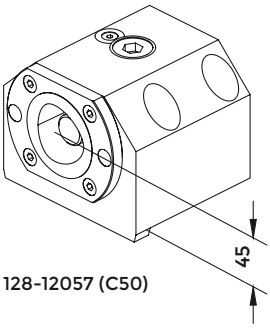

128-12057 (C50)

ACCESSORIES

BORING BAR SLEEVE

p. 726

TOOLHOLDER FOR BORING BAR

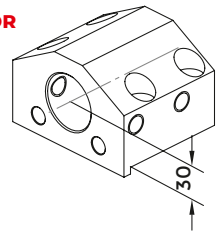

128-22001
Ø40 mm

COMBI TOOLHOLDER WITH INTERNAL COOLANT FOR BORING BAR AND INSERT DRILL

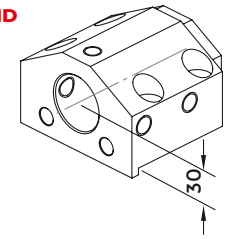

128-22005
Ø40 mm

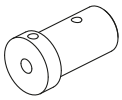

8971 (Ø10 mm)
8972 (Ø12 mm)
8973 (Ø16 mm)
8974 (Ø20 mm)

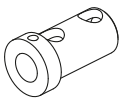

8975 (Ø25 mm)
8976 (Ø32 mm)

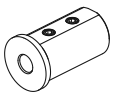

9615 (Ø8 mm)
9616 (Ø10 mm)
9617 (Ø12 mm)

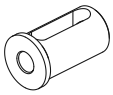

9619 (Ø16 mm)
9621 (Ø20 mm)
9622 (Ø25 mm)
9623 (Ø32 mm)

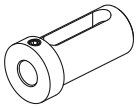

8768 (Ø16 mm)
8770 (Ø20 mm)
8771 (Ø25 mm)
8772 (Ø32 mm)

CONNECTION

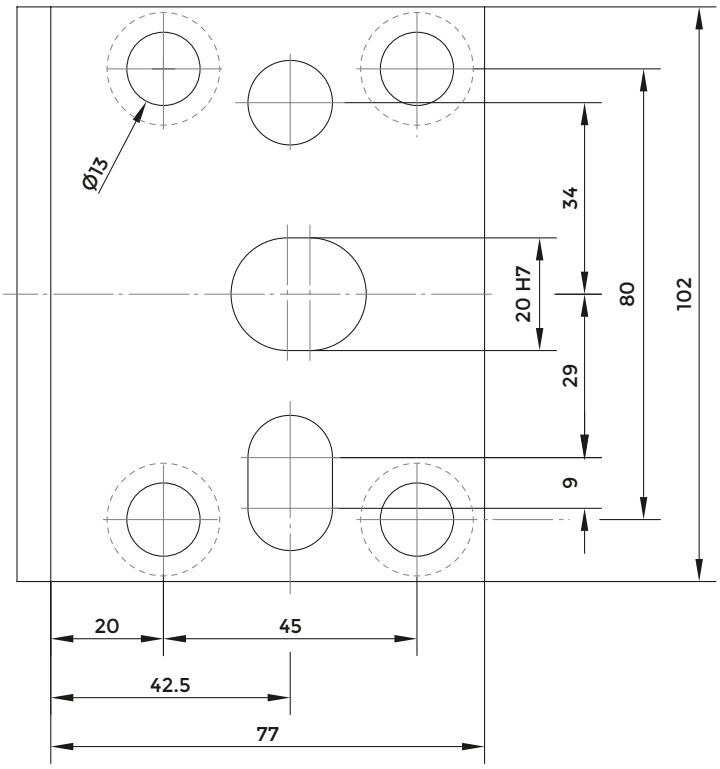

RADIAL TOOLHOLDER

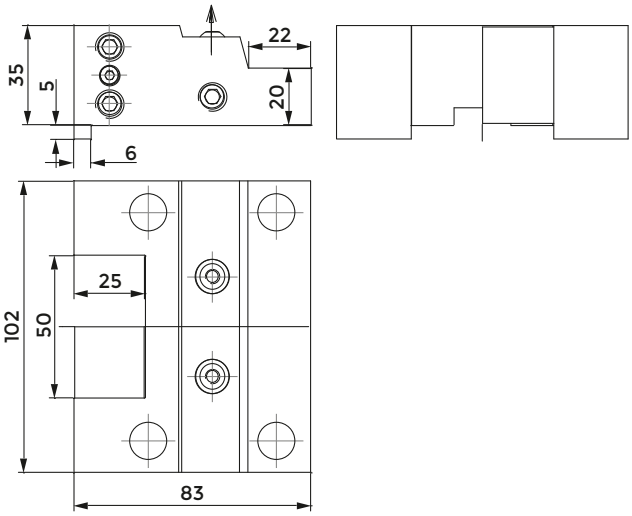

COD.	CLAMPING SCREW	CLAMPING PLATE	SCREW FOR CLAMPING PLATE	SPRING FOR CLAMPING PLATE	COOLANT NOZZLE
128-420110	811-104030	832-002069	811-302004	824-101010	833-001080

AXIAL TOOLHOLDER

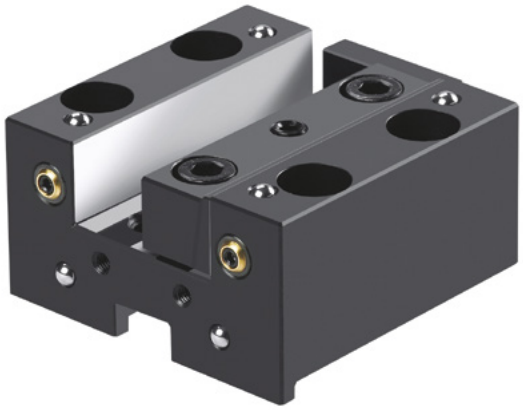

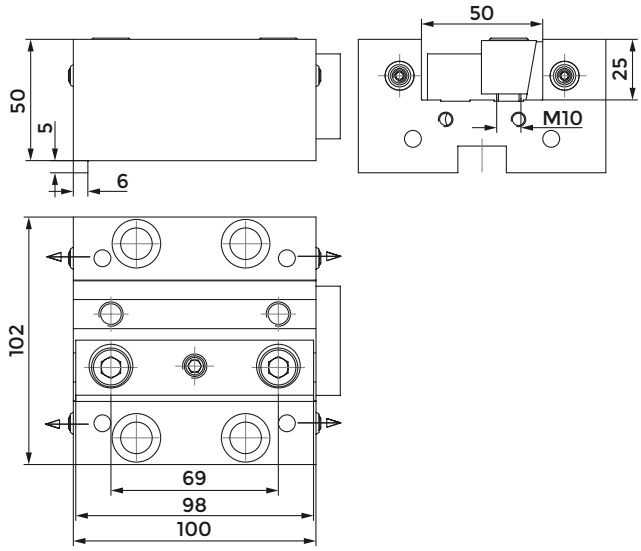

COD.	CLAMPING PLATE	COOLANT NOZZLE	STOP PLATE	SCREW FOR PLATE
			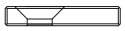	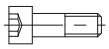
128-32001	832-007220	833-001080	832-003045	811-101026

TOOLHOLDER FOR BORING BAR

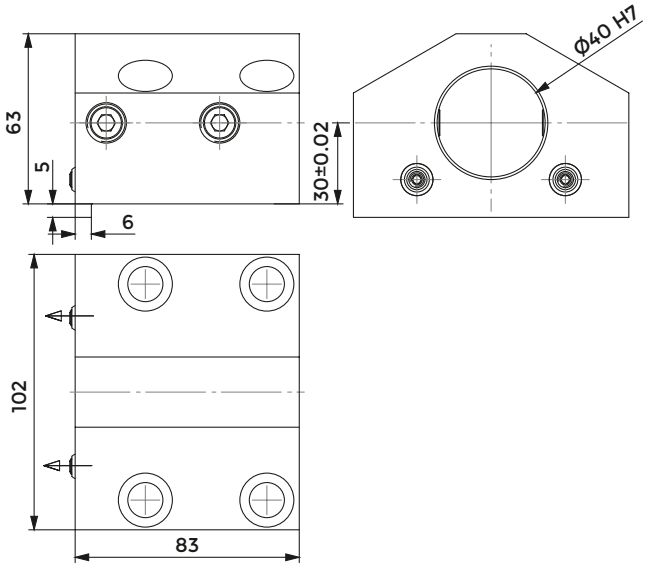

COD.	CLAMPING SCREW	COOLANT NOZZLE
128-22001	811-104069	833-001080

COMBI TOOLHOLDER WITH INTERNAL COOLANT FOR BORING BAR AND INSERT DRILL

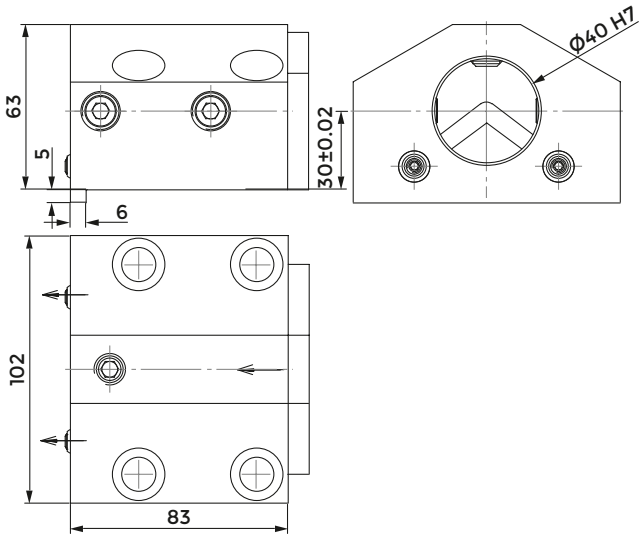

COD.	CLAMPING SCREW 1	CLAMPING SCREW 2	COOLANT NOZZLE	COVER	SCREW FOR COVER
					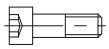
128-22005	811-104069	811-102043	833-001080	832-003056	811-101016

POLYGONAL TOOLHOLDER

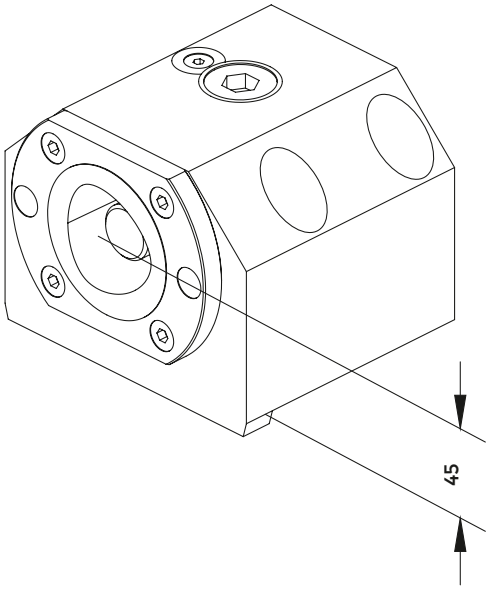

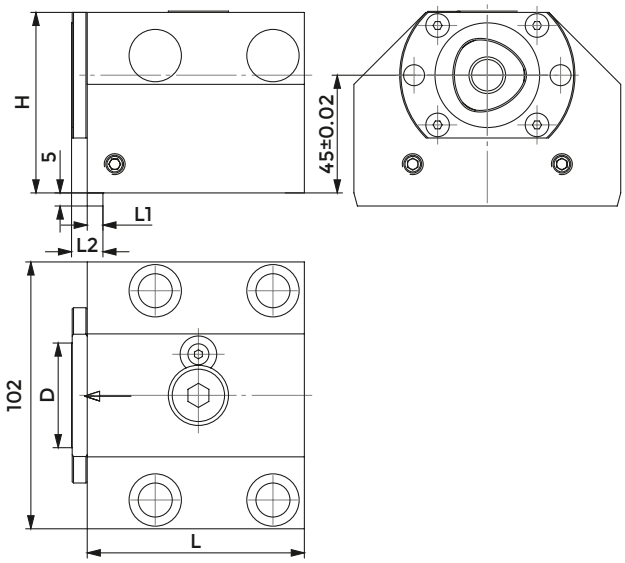

COD.	POLYGONAL	D	H	L	L1	L2	CLAMPING UNIT
128-12057	C50	50	77	88	11	19	CXC50-10

POLYGONAL TOOLHOLDER

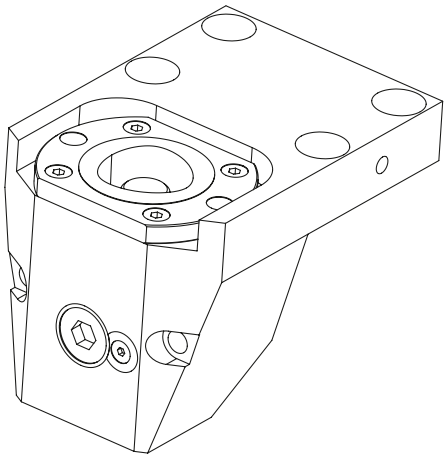

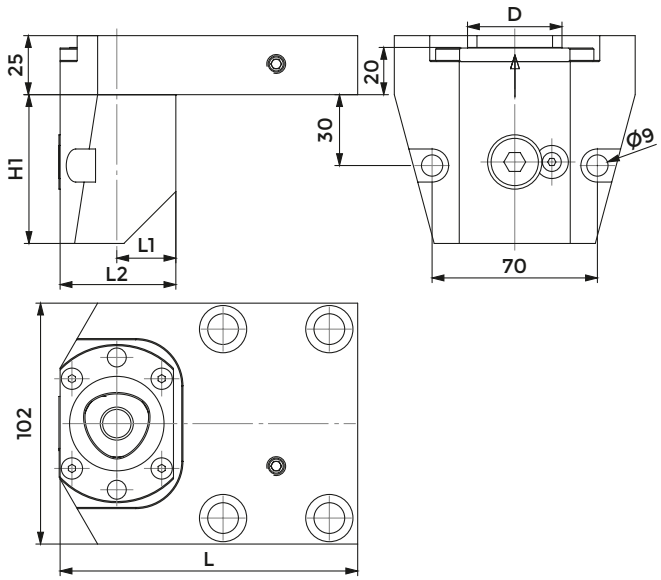

COD.	POLYGONAL	D	H	L	L1	L2	CLAMPING UNIT
128-12059	C50	50	75	142	33	65	CXC50-10

OKUMA (BMT60)

Index of machines p. 362

FACE AND O.D. CUTTING HOLDER

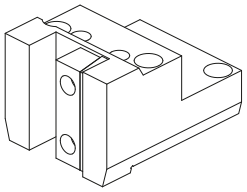

128-41507 - 25x25 mm
128-41507-IC - 25x25 mm

FACE AND O.D. CUTTING HOLDER

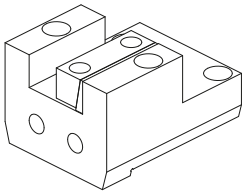

128-31503 - 25x25 mm

QUALIFIED TOOL

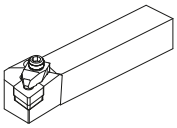

FACE AND O.D. CUTTING HOLDER

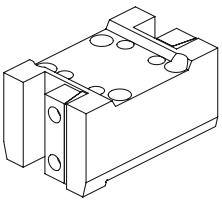

128-41509 - 25x25 mm - H75
128-41509-IC - 25x25 mm - H75
128-41548 - 25x25 mm - H110

FACE AND O.D. CUTTING HOLDER

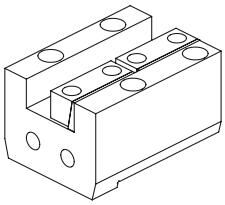

128-31505 - 25x25 mm

FAST-IN DRIVEN TOOLS

FAST-IN p. 506
DRIVEN TOOLS p. 302

ACCESSORIES

TOOLHOLDER FOR BORING BAR

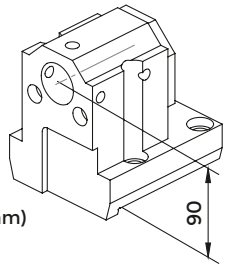

128-21514 (Ø32 mm)

TOOLHOLDER FOR BORING BAR

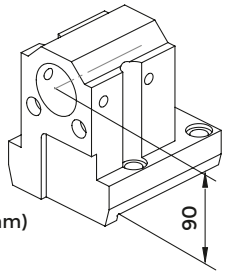

128-21515 (Ø40 mm)

COMBI TOOLHOLDER WITH INTERNAL COOLANT FOR BORING BAR AND INSERT DRILL

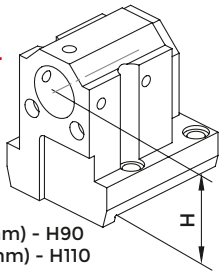

128-21516 (Ø40 mm) - H90
128-21563 (Ø40 mm) - H110

COMBI TOOLHOLDER WITH INTERNAL COOLANT FOR BORING BAR AND INSERT DRILL

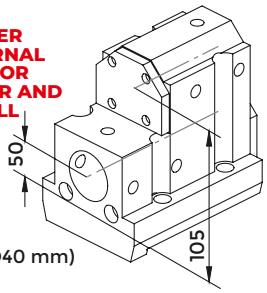

128-21520 (Ø40 mm)

BORING BAR SLEEVE

p. 726

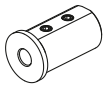

9607 (Ø8 mm)
9608 (Ø10 mm)
9609 (Ø12 mm)
8971 (Ø10 mm)
8972 (Ø12 mm)
8973 (Ø16 mm)
8974 (Ø20 mm)

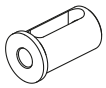

9611 (Ø16 mm)
9613 (Ø20 mm)
9614 (Ø25 mm)

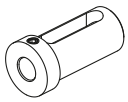

8764 (Ø16 mm)
8766 (Ø20 mm)
8767 (Ø25 mm)

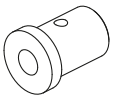

8963 (Ø25 mm)
8964 (Ø32 mm)

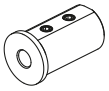

9615 (Ø8 mm)
9616 (Ø10 mm)
9617 (Ø12 mm)

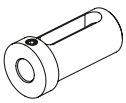

8768 (Ø16 mm)
8770 (Ø20 mm)
8771 (Ø25 mm)
8772 (Ø32 mm)
9619 (Ø16 mm)
9621 (Ø20 mm)
9622 (Ø25 mm)
9623 (Ø32 mm)

CUT-OFF HOLDER

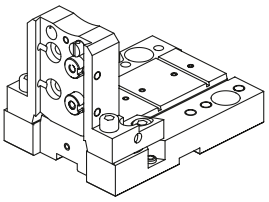

128-11535 (H=32 mm)

CUT-OFF TOOL

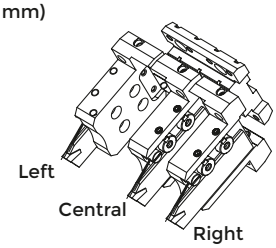

CONTROL PIN

p. 758

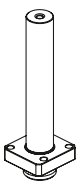

137-00195

PROTECTION COVER

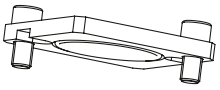

137-00247

CONNECTION

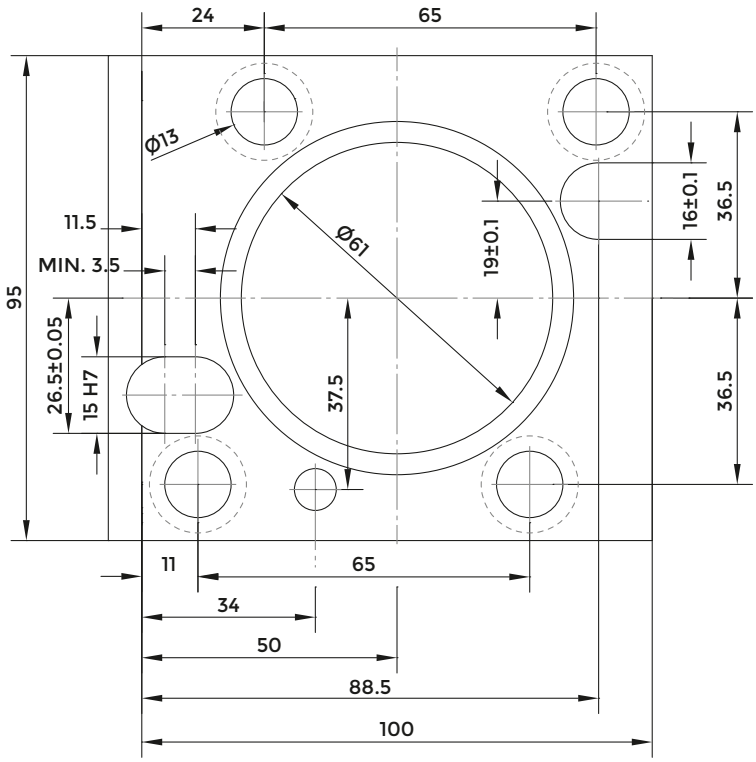

RADIAL TOOLHOLDER

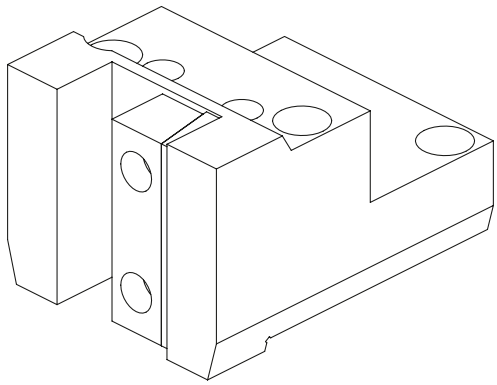

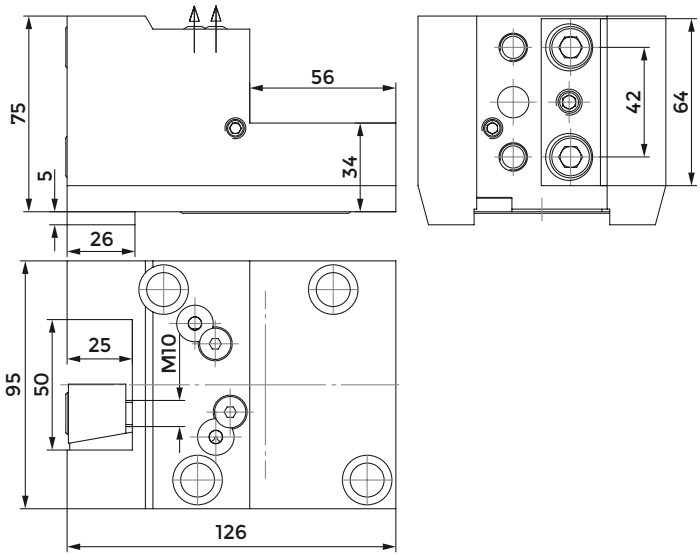

COD.	INTERNAL COOLING	CLAMPING PLATE	COOLANT BALL	SCREW FOR BALL	O RING
128-41507	NO	832-007360	833-001470	811-108018	823-101084
128-41507-IC	SI	832-007360	833-001470	811-108018	823-101084

AXIAL TOOLHOLDER

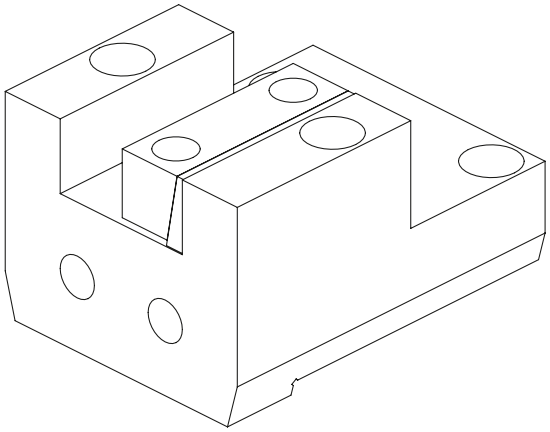

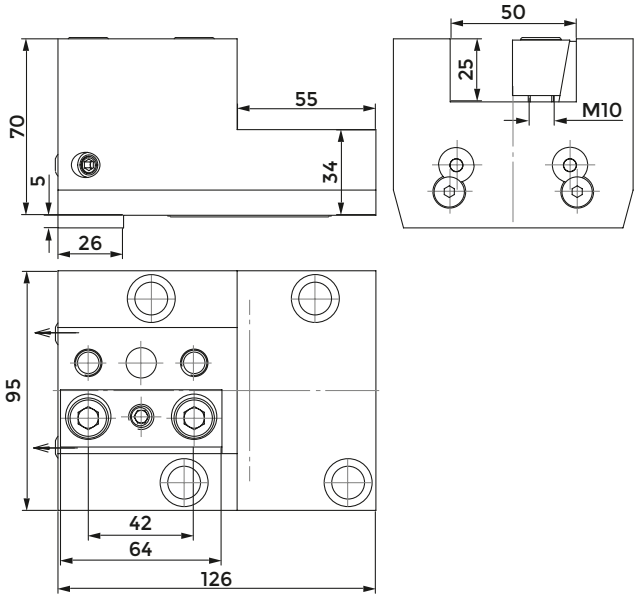

COD.	CLAMPING PLATE	COOLANT BALL	SCREW FOR BALL	O RING
128-31503	832-007360	833-001470	811-108018	823-101084

RADIAL TOOLHOLDER

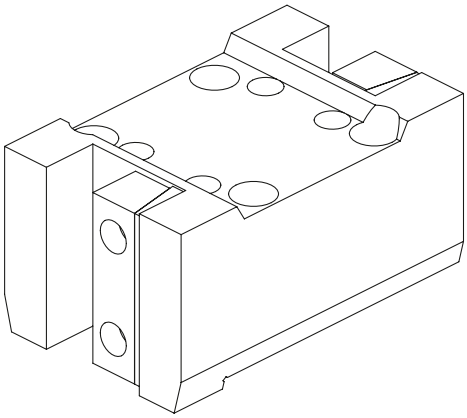

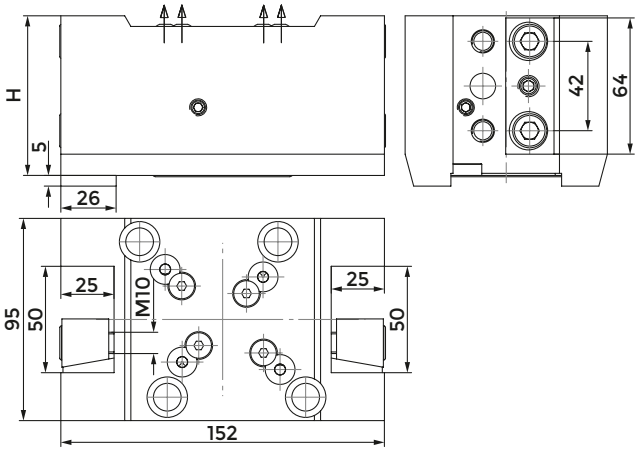

COD.	INTERNAL COOLING	H	CLAMPING PLATE	COOLANT BALL	SCREW FOR BALL	O RING
128-41509	NO	75	832-007360	833-001470	811-108018	823-101084
128-41509-IC	SI	75	832-007360	833-001470	811-108018	823-101084
128-41548	NO	105	832-007360	833-001470	811-108018	823-101084

AXIAL TOOLHOLDER

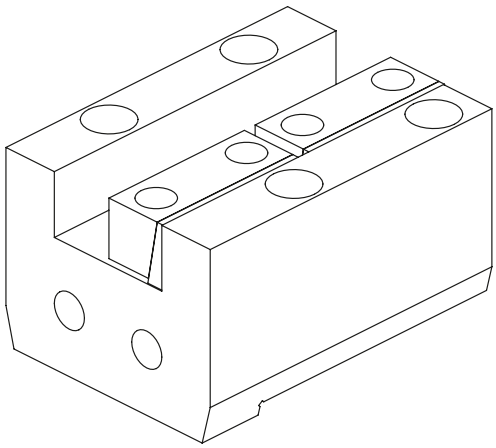

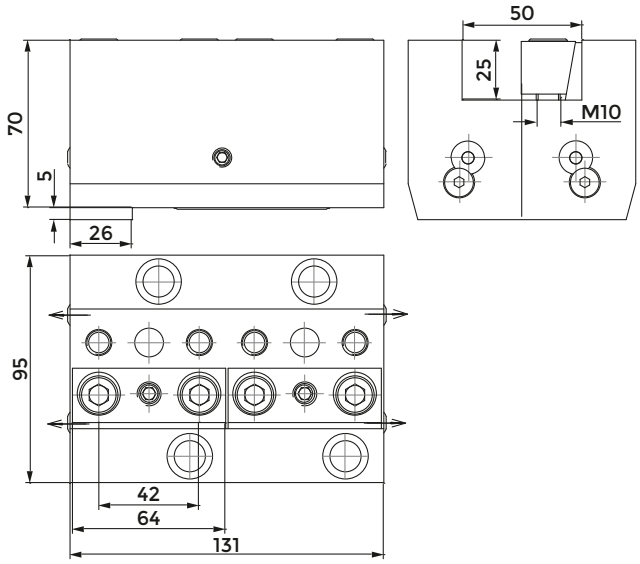

COD.	CLAMPING PLATE	COOLANT BALL	SCREW FOR BALL	O RING
128-31505	832-007360	833-001470	811-108018	823-101084

CUT-OFF HOLDER

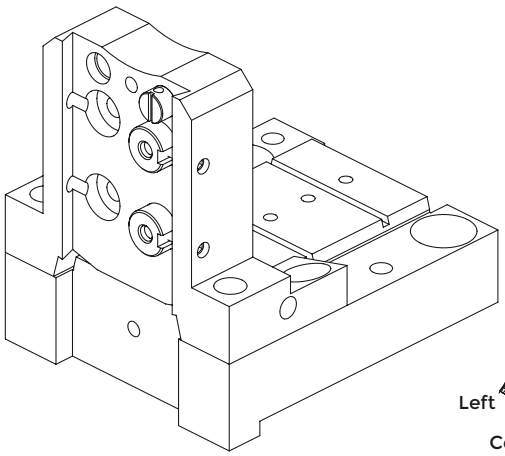

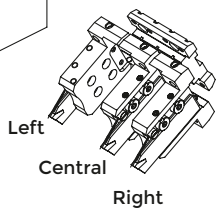

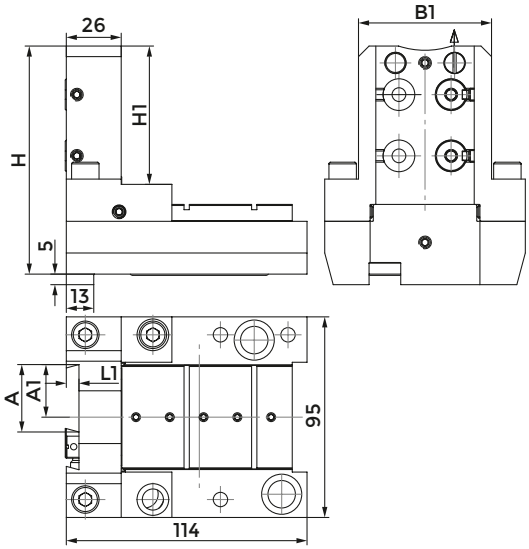

COD.	A	A1	L1	B1	H	H1	COOLANT NOZZLE	O RING FOR COOLANT NOZZLE	O RING FOR BODY	O RING
128-11535	32	25	6	63	108	65.5	833-001490	823-101058	823-101061	823-101084

COD.	SHIM PLATE	SCREW FOR PLATE	CLAMPING PLATE	SPRING	CLAMPING SCREW	SCREW
128-11535	832-014449	811-108037	832-014450	824-300012	811-101028	811-104013

COMBI TOOLHOLDER WITH INTERNAL COOLANT FOR BORING BAR AND INSERT DRILL

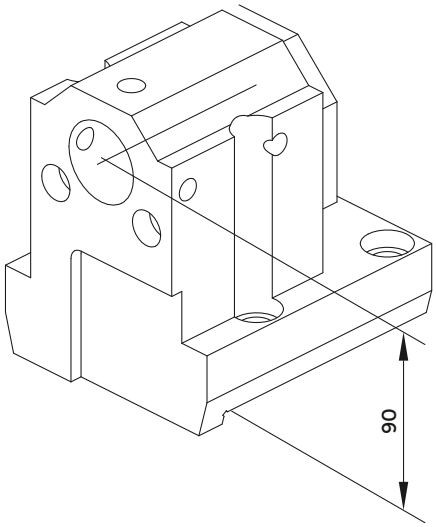

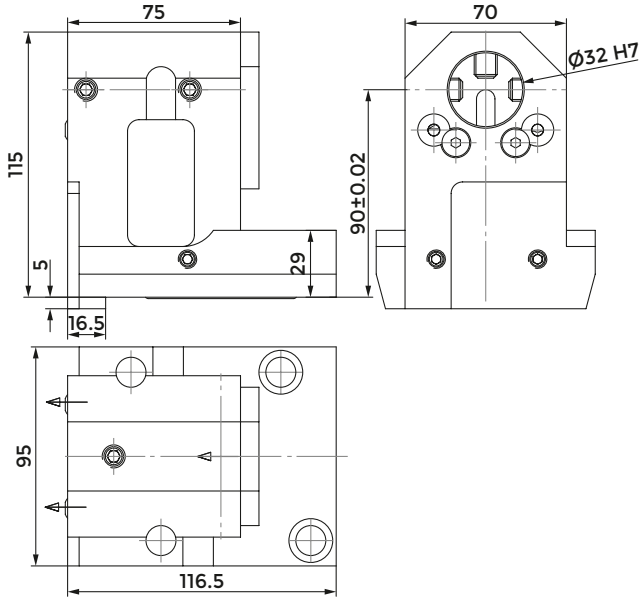

COD.	CLAMPING SCREW 1 (M10X25)	CLAMPING SCREW 2 (M10X20)	COOLANT BALL	SCREW FOR BALL	O RING	COVER	SCREW FOR COVER
							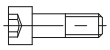
128-21514	811-102039	811-102038	833-001470	811-108018	823-101084	832-003297	811-101016

TOOLHOLDER FOR BORING BAR

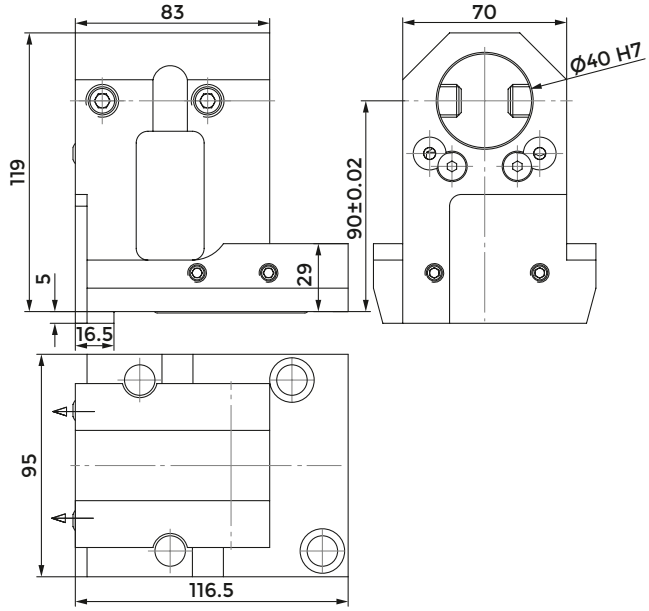

COD.	CLAMPING SCREW	COOLANT BALL	SCREW FOR BALL	O RING
128-21515	811-102088	833-001470	811-108018	823-101084

COMBI TOOLHOLDER WITH INTERNAL COOLANT FOR BORING BAR AND INSERT DRILL

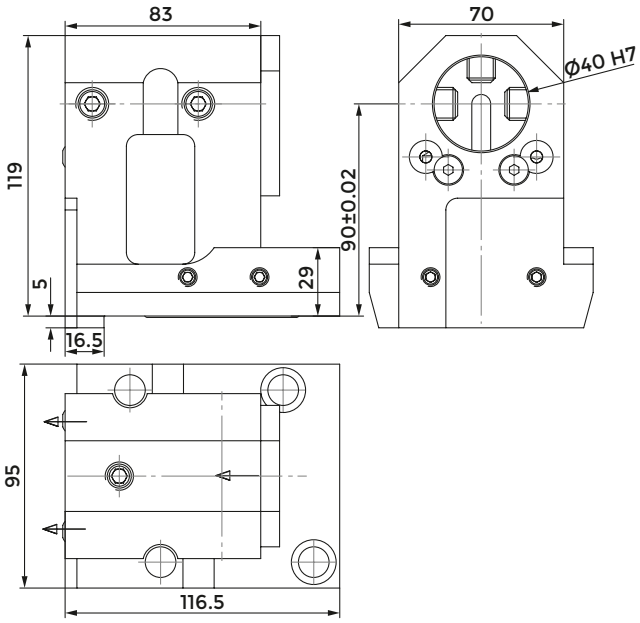

COD.	H	H1	CLAMPING SCREW 1 (M14X25)	CLAMPING SCREW 2 (M12X20)	COOLANT BALL	SCREW FOR BALL	O RING	COVER	SCREW FOR COVER
128-21516	90	119	811-102076	811-102044	833-001470	811-108018	823-101084	832-003297	811-101016
128-21563	110	139	811-102076	811-102044	833-001470	811-108018	823-101084	832-003297	811-101016

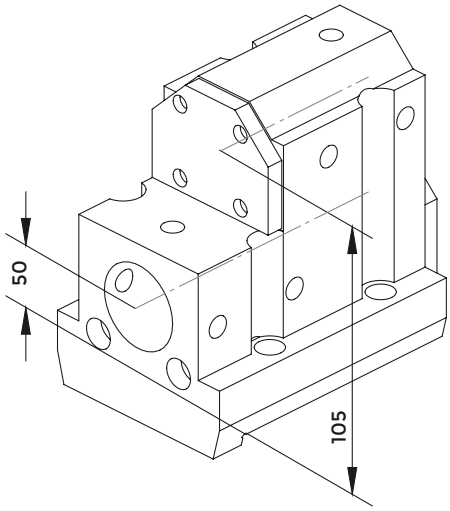

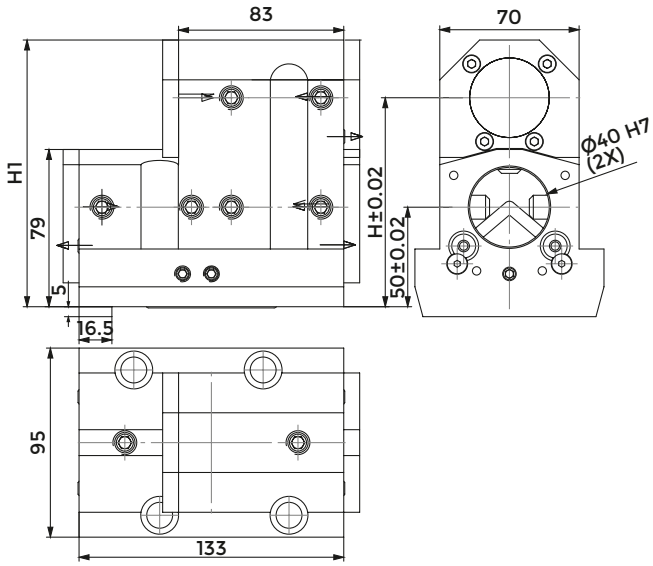

COD.	CLAMPING SCREW 1 (M12X25)	CLAMPING SCREW 2 (M12X12)	COOLANT BALL	SCREW FOR BALL	O RING	COVER 1	COVER 2	SCREW FOR COVER
128-21520	811-102045	811-102064	833-001410	811-108024	823-101084	832-003306	832-003307	811-101016

PROTECTION COVER

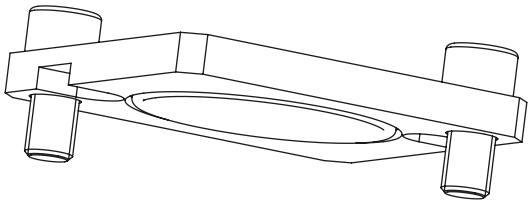

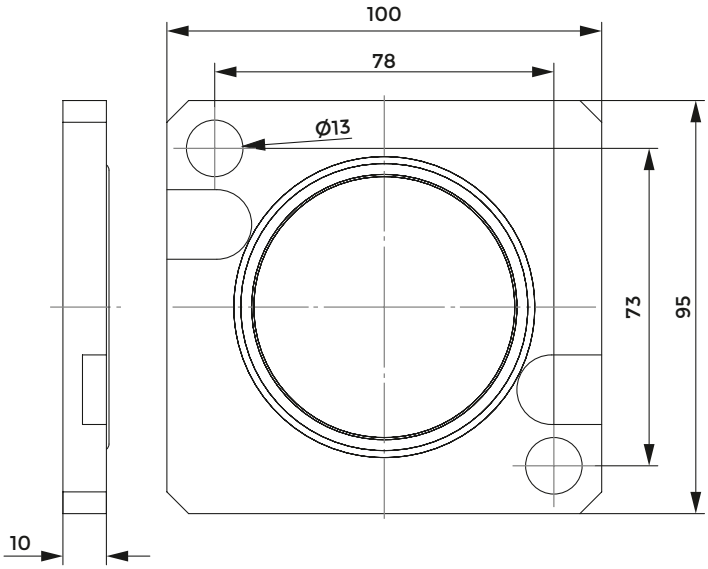

COD.	O RING
137-00247	823-101084

OKUMA (BMT60)

Index of machines p. 362

FACE AND O.D. CUTTING HOLDER

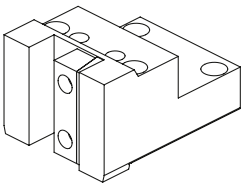

128-41508
25x25 mm
128-41508-IC
25x25 mm

QUALIFIED TOOL

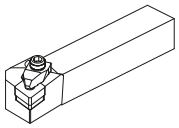

FACE AND O.D. CUTTING HOLDER

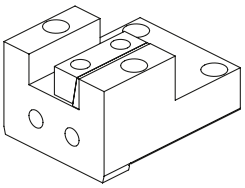

128-31504
25x25 mm
128-31504-IC
25x25 mm

FAST-IN p. 506
DRIVEN TOOLS p. 302

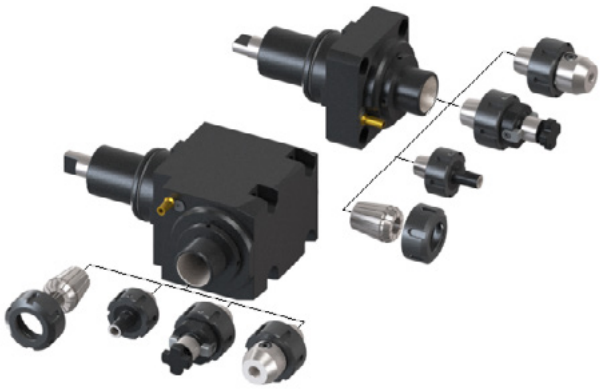

ACCESSORIES

COMBI TOOLHOLDER WITH INTERNAL COOLANT FOR BORING BAR AND INSERT DRILL

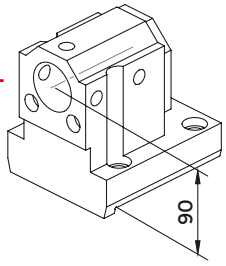

128-21518 (D40)
128-21527 (D50)

POLYGONAL TOOL HOLDER

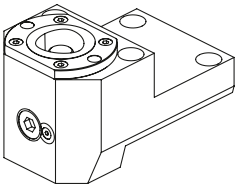

128-11562 (C50)

POLYGONAL TOOL HOLDER

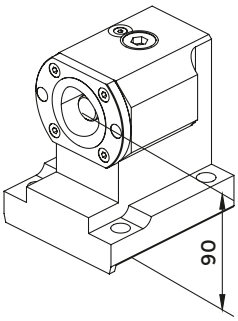

128-11560 (C50)

BORING BAR SLEEVE p. 726

D40

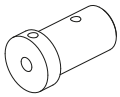

8971 (Ø10 mm)
8972 (Ø12 mm)
8973 (Ø16 mm)
8974 (Ø20 mm)

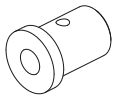

8951 (Ø20 mm)
8953 (Ø32 mm)

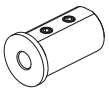

9615 (Ø8 mm)
9616 (Ø10 mm)
9617 (Ø12 mm)

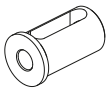

9619 (Ø16 mm)
9621 (Ø20 mm)
9622 (Ø25 mm)
9623 (Ø32 mm)

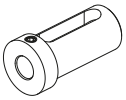

8768 (Ø16 mm)
8770 (Ø20 mm)
8771 (Ø25 mm)
8772 (Ø32 mm)

CUT-OFF HOLDER

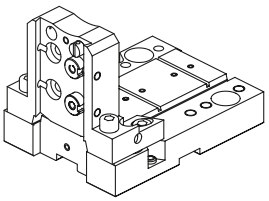

128-11536 (32 mm)

CUT-OFF TOOL

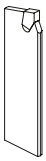

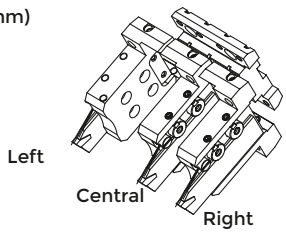

CONTROL PIN

p. 758

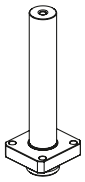

137-00196

PROTECTION COVER

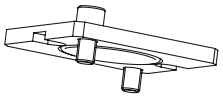

137-00248

CONNECTION

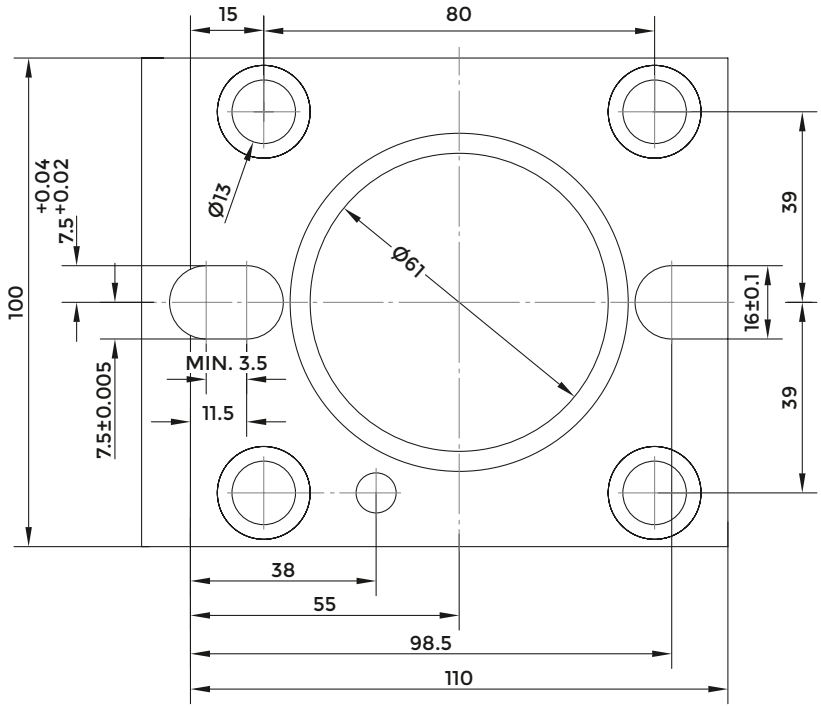

RADIAL TOOLHOLDER

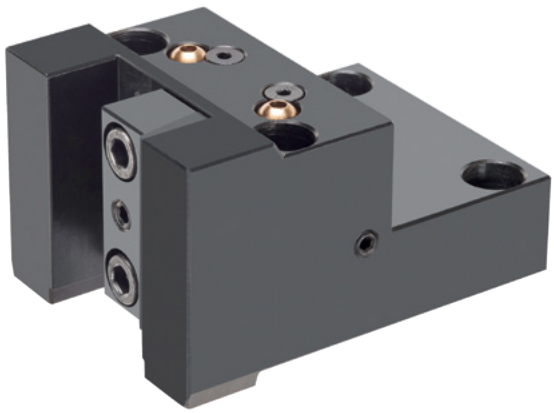

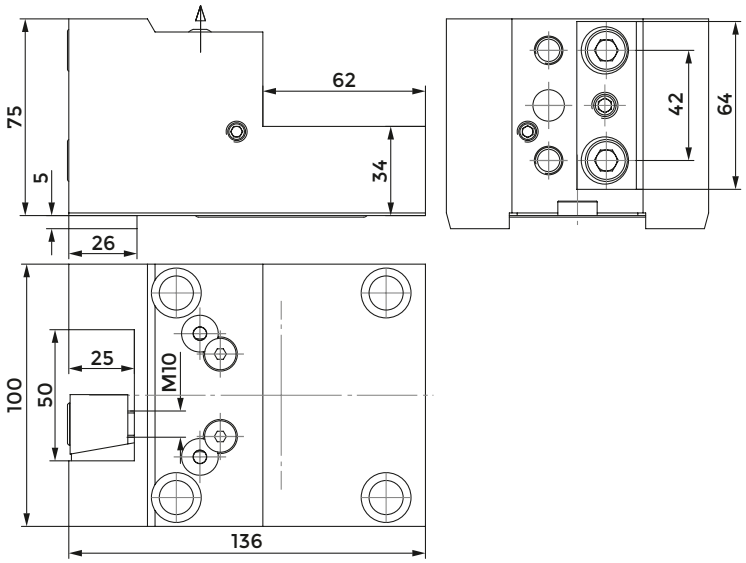

COD.	INTERNAL COOLING	CLAMPING PLATE	COOLANT BALL	SCREW FOR BALL	O RING
128-41508	NO	832-007360	833-001470	811-108018	823-101084
128-41508-IC	SI	832-007360	833-001470	811-108018	823-101084

AXIAL TOOLHOLDER

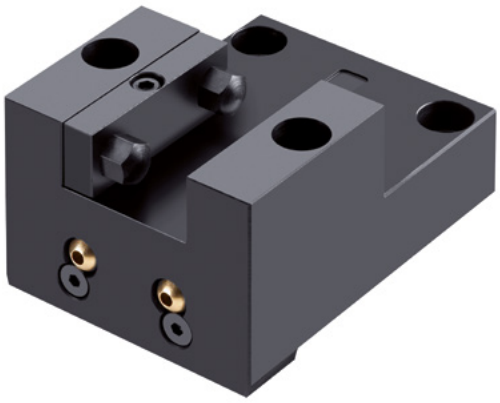

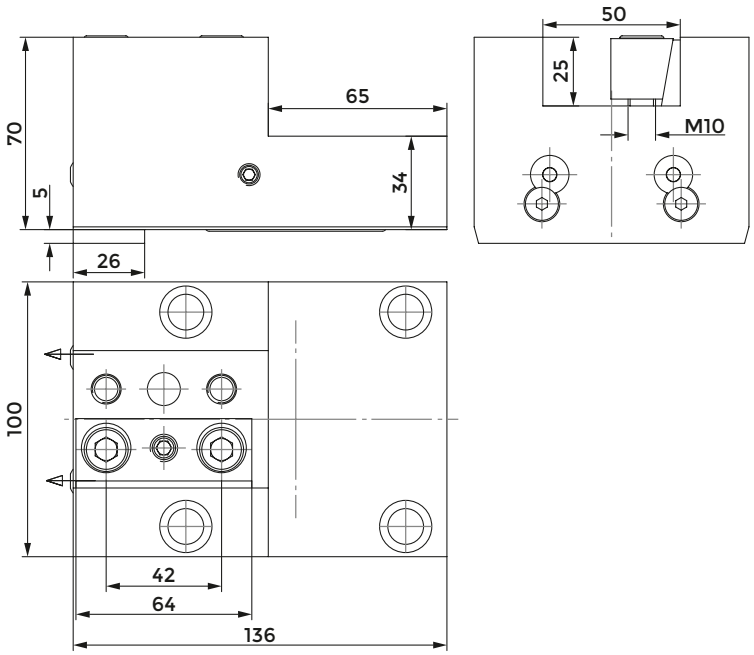

COD.	INTERNAL COOLING	CLAMPING PLATE	COOLANT BALL	SCREW FOR BALL	O RING
128-31504	NO	832-007360	833-001470	811-108018	823-101084
128-31504-IC	SI	832-007360	833-001470	811-108018	823-101084

CUT-OFF HOLDER

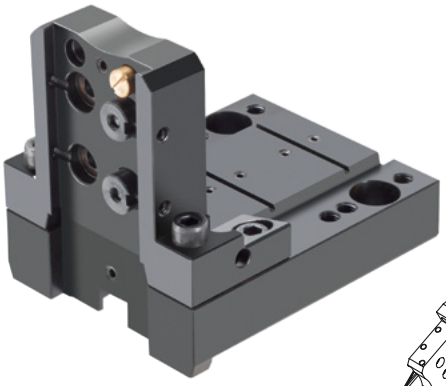

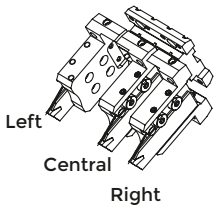

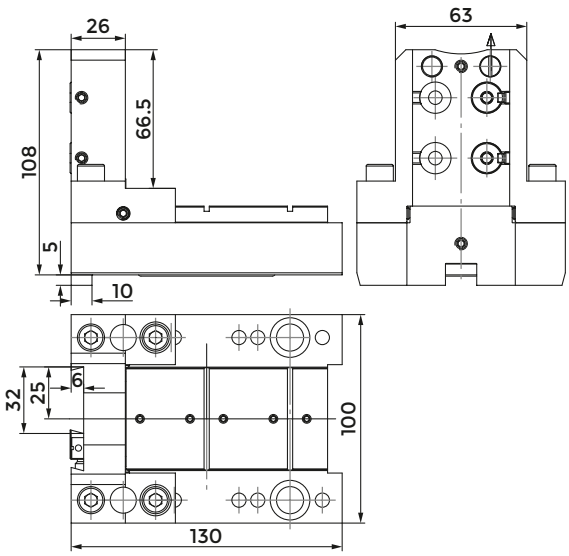

COD.	COOLANT NOZZLE	O RING FOR COOLANT NOZZLE	O RING FOR BODY	O RING FOR BASE	SHIM PLATE
128-11536	833-001490	823-101058	823-101061	823-101084	832-014449

COD.	SCREW FOR PLATE	CLAMPING PIN	SPRING	CLAMPING SCREW	SCREW
128-11536	811-108037	832-014450	824-300012	811-101028	811-104013

COMBI TOOLHOLDER WITH INTERNAL COOLANT FOR BORING BAR AND INSERT DRILL

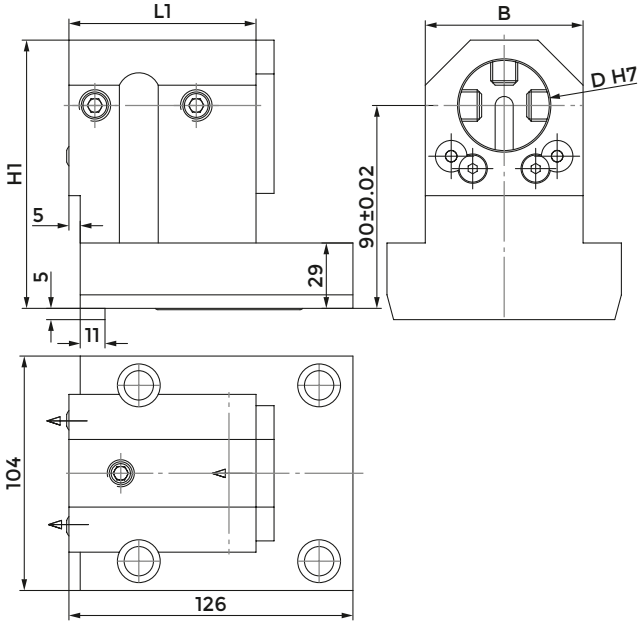

COD.	D	B	H1	L1	CLAMPING SCREW 1 (M14X25)	CLAMPING SCREW 2 (M12X20)	COOLANT BALL	SCREW FOR BALL	O RING	COVER	SCREW FOR COVER
128-21518	40	70	119	83	811-102088	811-102044	833-001470	811-108018	823-101084	832-003297	811-101016
128-21527	50	80	124	93	811-102088	811-102044	833-001470	811-108018	823-101084	832-003314	811-101016

POLYGONAL TOOLHOLDER

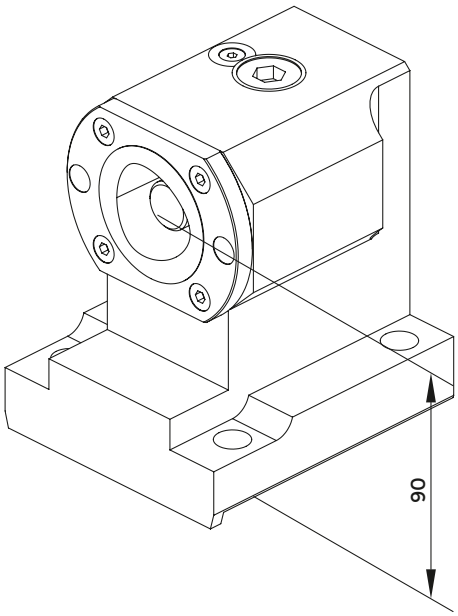

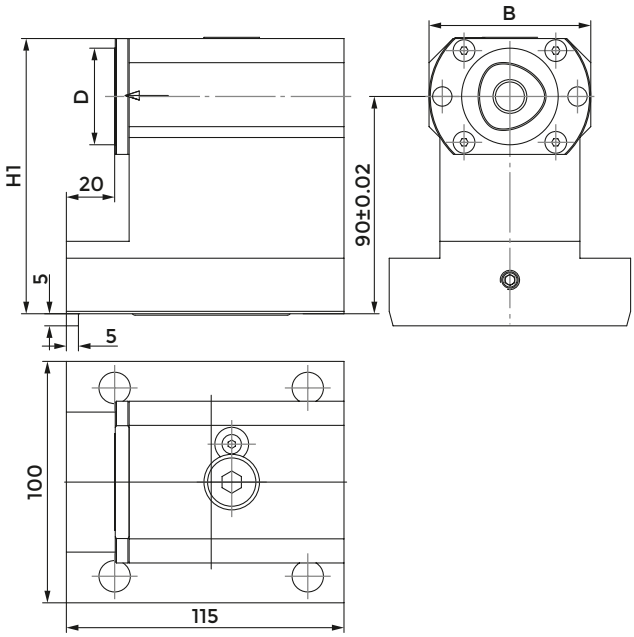

COD.	POLYGONAL	D	H1	B	CLAMPING UNIT	O RING
128-11560	C50	50	122	82	CXC50-10	823-101084

POLYGONAL TOOLHOLDER

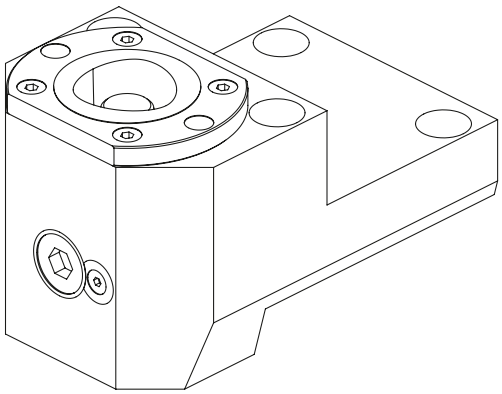

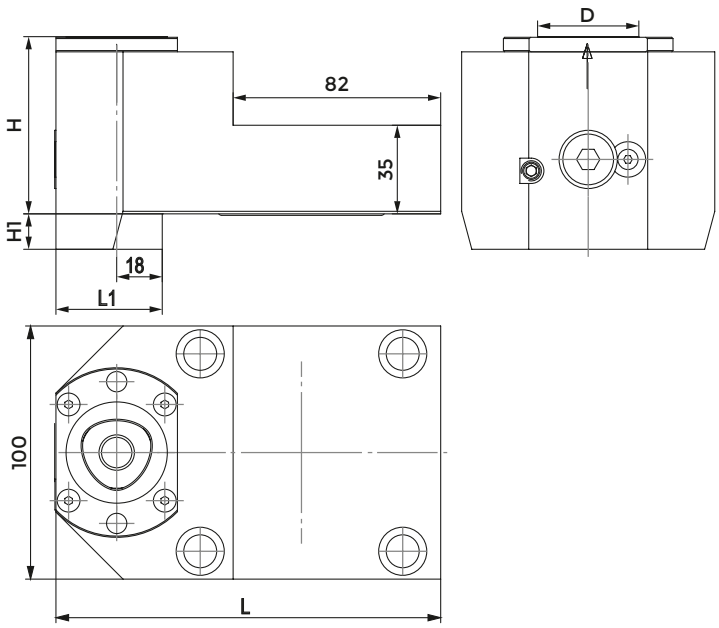

COD.	POLYGONAL	D	H	H1	L	L1	CLAMPING UNIT	O RING
128-11562	C50	50	75	20	160	50	CXC50-10	823-101084

NAKAMURA TOME (BMT44)

Index of machines p. 361

FACE AND O.D. CUTTING HOLDER

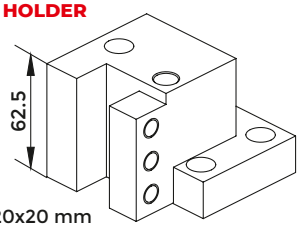

C21410 - 20x20 mm

QUALIFIED TOOL

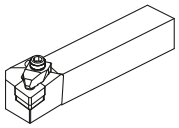

FACE AND O.D. CUTTING HOLDER

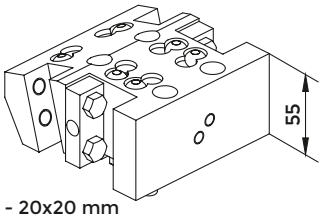

C21478 - 20x20 mm

FAST-IN DRIVEN TOOLS

FAST-IN p. 506
DRIVEN TOOLS p. 302

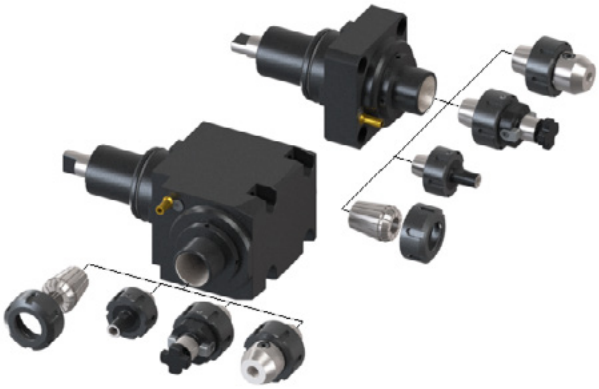

ACCESSORIES

COMBI TOOLHOLDER WITH INTERNAL COOLANT FOR BORING BAR AND INSERT DRILL

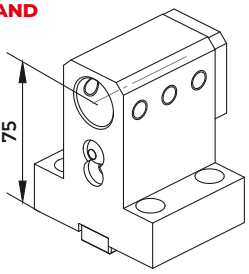

C22410

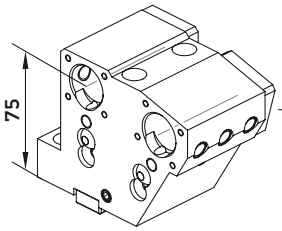

C22412

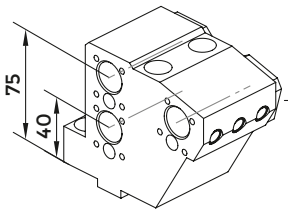

121-22071

BORING BAR SLEEVE

p. 726

9600 (Ø8 mm)
9601 (Ø10 mm)
9602 (Ø12 mm)

9604 (Ø16 mm)

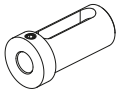

8759 (Ø12 mm)
8761 (Ø16 mm)
8763 (Ø20 mm)

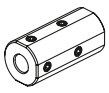

E2-1 20x6
E2-1 20x8
E2-1 20x10
E2-1 20x12

CUT-OFF HOLDER

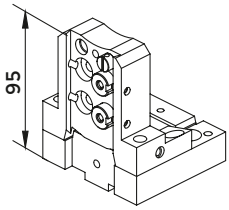

121-22074 (26 mm)

CUT-OFF TOOL

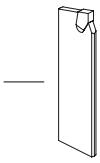

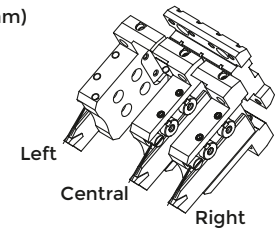

PROTECTION COVER

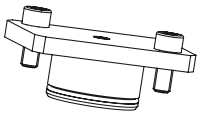

137-00251

CONNECTION

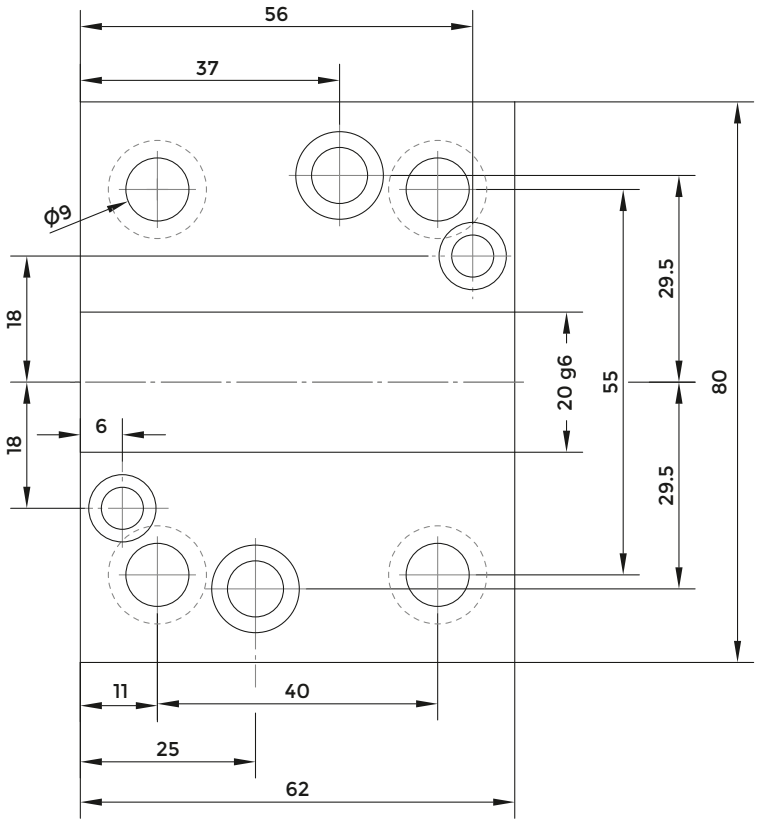

RADIAL TOOLHOLDER

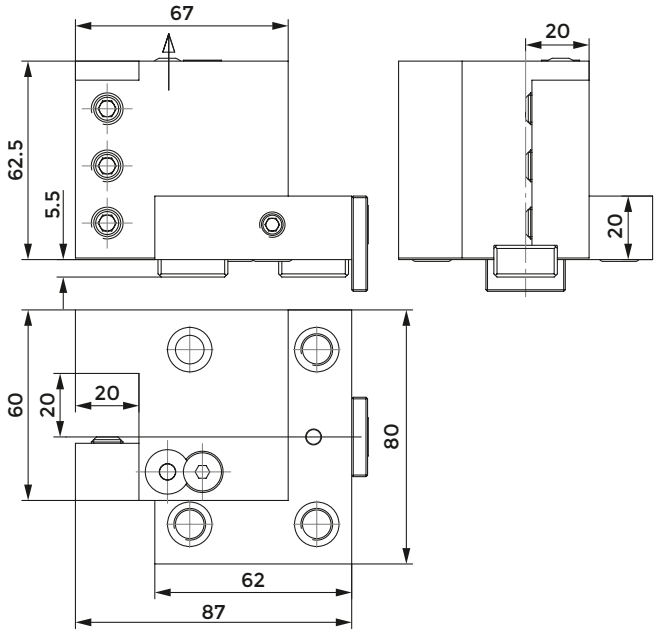

COD.	CLAMPING SCREW	KEY	SCREW FOR KEY	COOLANT BALL	SCREW FOR BALL	STOP PLATE	SCREW FOR PLATE	O RING FOR COOLANT INTAKE
		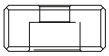	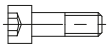					
C21410	811-102038	814-203270	811-101027	833-001470	811-108018	832-003232	811-108029	823-101083

RADIAL TOOLHOLDER

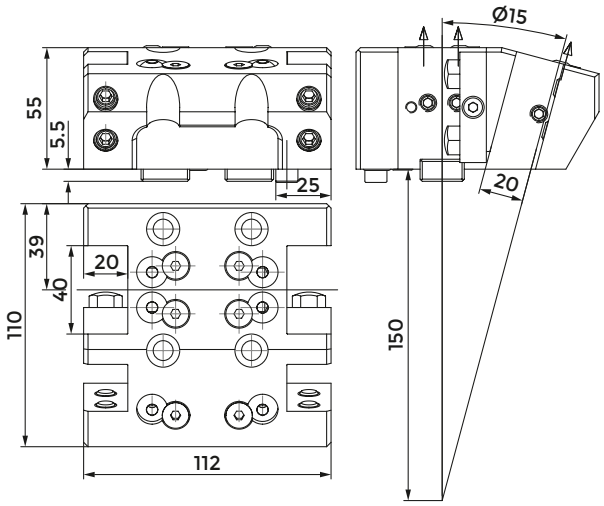

COD.	CLAMPING SCREW 1	CLAMPING SCREW 2	CLAMPING PLATE	SCREW FOR PLATE	KEY	SCREW FOR KEY
C21478	811-102037	811-301108	832-002184	811-101019	814-203270	811-101027

COD.	STOP SCREW	COOLANT BALL	SCREW FOR BALL	O RING FOR COOLANT INTAKE 1 (d7 59X2.62)	O RING FOR COOLANT INTAKE 2 (d6X2)
C21478	811-101026	833-001470	811-108018	823-101083	823-101082

CUT-OFF HOLDER

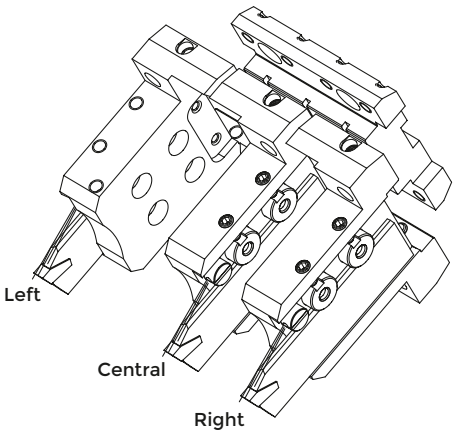

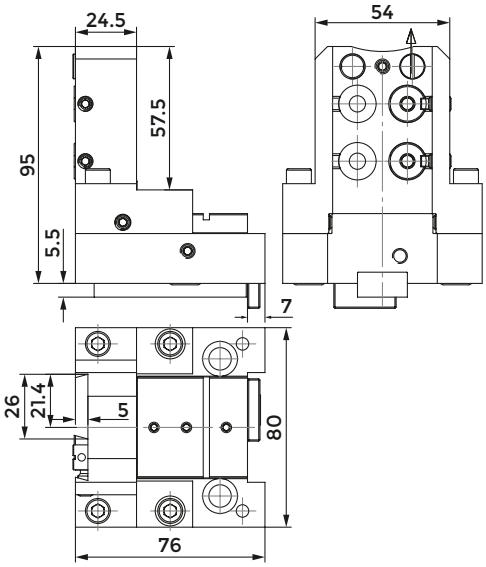

COD.	KEY	SCREW FOR KEY	COOLANT NOZZLE	O RING FOR COOLANT NOZZLE	O RING FOR BODY	SHIM PLATE	SCREW FOR PLATE
121-22074	814-203380	811-101011	833-001490	823-101058	823-101061	832-014448	811-108037

COD.	CLAMPING PIN	SPRING	CLAMPING SCREW	SCREW	STOP PLATE	SCREW FOR PLATE	O RING FOR COOLANT INTAKE
121-22074	832-014447	824-300012	811-101028	811-104013	832-003232	811-108029	823-101083

COMBI TOOLHOLDER WITH INTERNAL COOLANT FOR BORING BAR AND INSERT DRILL

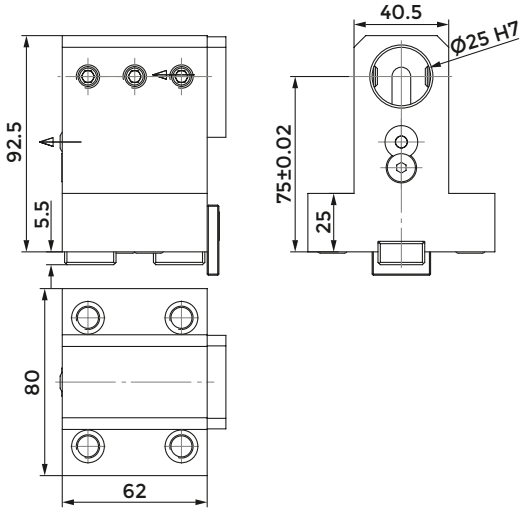

COD.	CLAMPING SCREW	KEY	SCREW FOR KEY	COOLANT BALL	SCREW FOR BALL
C22410	811-102035	814-203270	811-101027	833-001470	811-108018

COD.	COVER	SCREW FOR COVER	STOP PLATE	SCREW FOR PLATE	O RING FOR COOLANT INTAKE
C22410	832-003291	811-101016	832-003232	811-108029	823-101083

DOUBLE TOOLHOLDER FOR BORING BAR

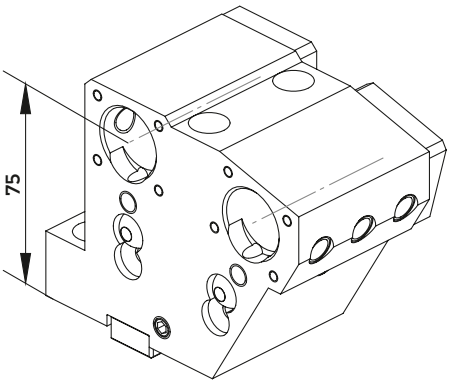

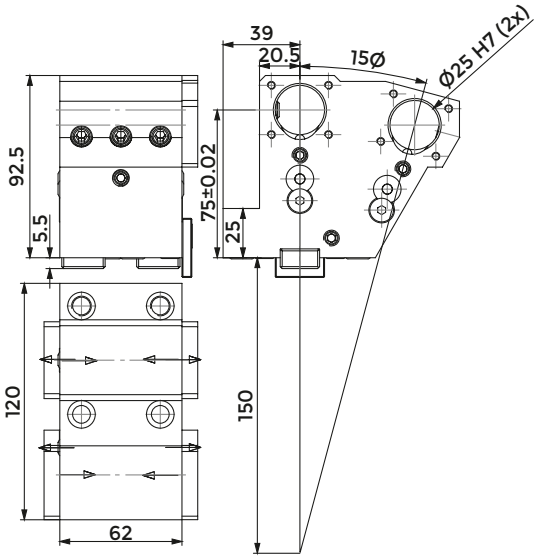

COD.	CLAMPING SCREW	KEY	SCREW FOR KEY	COOLANT BALL	SCREW FOR BALL	SCREW FOR INTERNAL COOLANT (M8X12)
C22412	811-102035	814-203270	811-101027	833-001470	811-108018	811-102028

COD.	COVER	SCREW FOR COVER	STOP PLATE	SCREW FOR PLATE	O RING FOR COOLANT INTAKE1 (D7.59X2.62)	O RING FOR COOLANT INTAKE2 (D6X2)
C22412	832-003280	811-101010	832-003232	811-108029	823-101083	823-101082

TREBLE TOOLHOLDER FOR BORING BAR

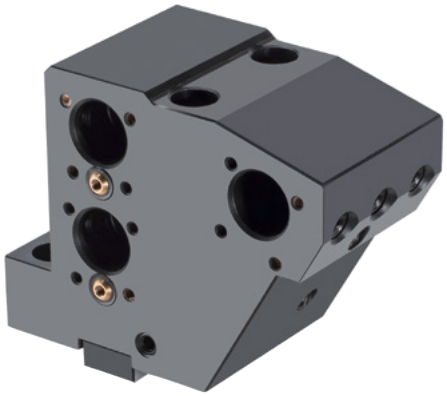

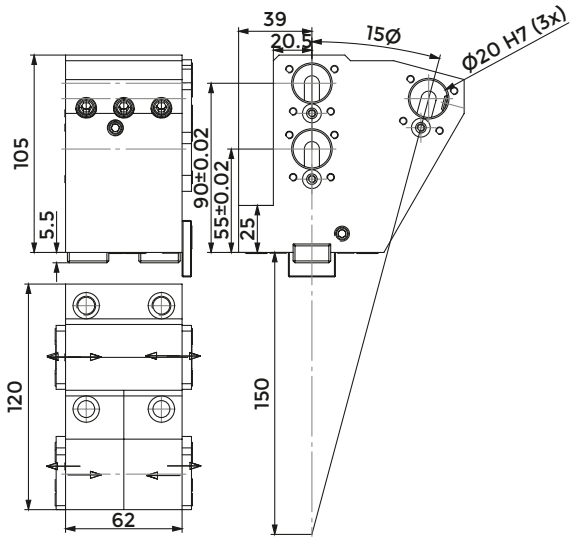

COD.	CLAMPING SCREW	KEY	SCREW FOR KEY	COOLANT BALL	COVER	SCREW FOR COVER
121-22071	811-102035	814-203270	811-101026	833-001070	832-003317	811-101010

COD.	STOP PLATE	SCREW FOR PLATE	O RING FOR COOLANT INTAKE1 (D7.59X2.62)	O RING FOR COOLANT INTAKE2 (D6X2)
121-22071	832-003232	811-108029	823-101083	823-101082

PROTECTION COVER

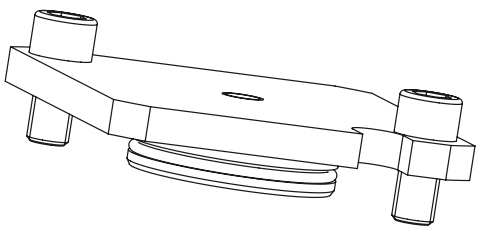

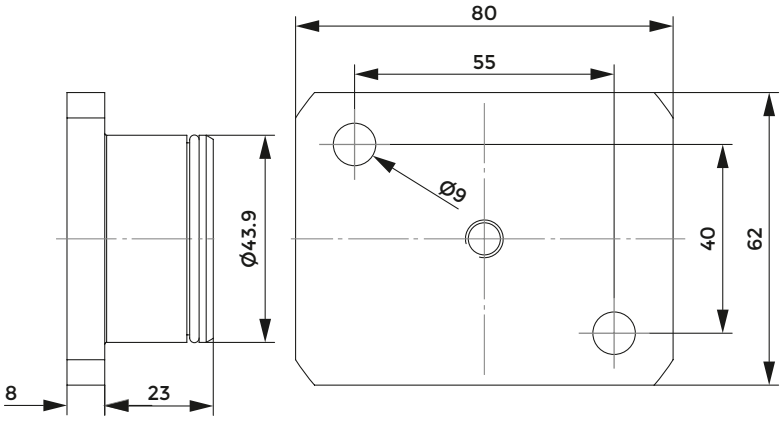

COD.	O RING
137-00251	823-101066

NAKAMURA TOME (BMT55) - CMZ

Index of machines p. 361

FACE AND O.D. CUTTING HOLDER

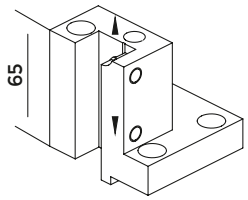

W1431 - 20x20 mm

FACE AND O.D. CUTTING HOLDER

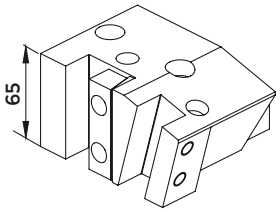

R1452 - 20x20 mm

QUALIFIED TOOL

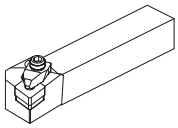

FACE AND O.D. CUTTING HOLDER

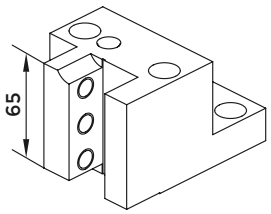

Z2414 - 25x25 mm

FACE AND O.D. CUTTING HOLDER

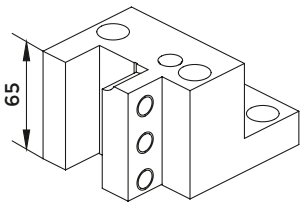

Z2413 - 25x25 mm

CUT-OFF HOLDER

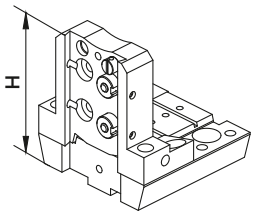

CUT-OFF TOOL

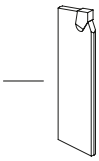

121-22076 (h=32 mm - H=100 mm)

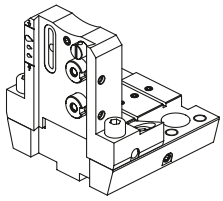

121-22076-IC (INTERNAL COOLANT)

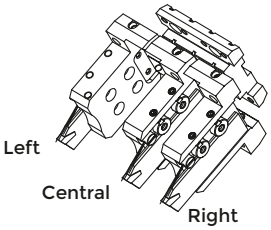

COMBI TOOLHOLDER WITH INTERNAL COOLANT FOR BORING BAR AND INSERT DRILL

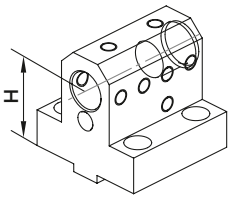

W1417 D25 - H=55 mm (Ø25 mm)
W4437 D25 - H=75 mm (Ø25 mm)

COMBI TOOLHOLDER WITH INTERNAL COOLANT FOR BORING BAR AND INSERT DRILL

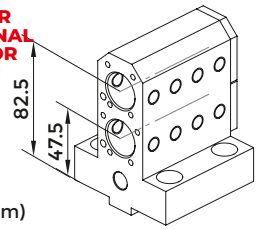

R8418 (Ø25 mm)

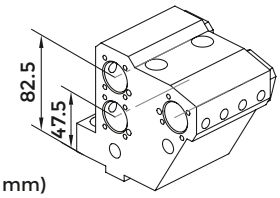

R8453 (Ø25 mm)

COMBI TOOLHOLDER WITH INTERNAL COOLANT FOR BORING BAR AND INSERT DRILL

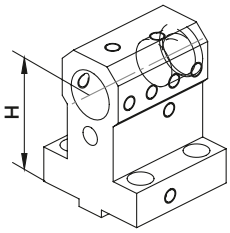

W1417 D32 - H=55 mm (Ø32 mm)
Z2417 D32 - H=70 mm (Ø32 mm)
Z7417 D32 - H=80 mm (Ø32 mm)

ACCESSORIES

BORING BAR SLEEVE
p. 726

	D25	D32
	9600 (Ø8 mm) 9601 (Ø10 mm) 9602 (Ø12 mm)	9607 (Ø8 mm) 9608 (Ø10 mm) 9609 (Ø12 mm)
	9604 (Ø16 mm)	9611 (Ø16 mm) 9613 (Ø20 mm) 9614 (Ø25 mm)
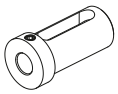	8759 (Ø12 mm) 8761 (Ø16 mm) 8763 (Ø20 mm)	8764 (Ø16 mm) 8766 (Ø20 mm) 8767 (Ø25 mm)
	5968 (Ø6 mm) 5969 (Ø8 mm) 5970 (Ø10 mm) 5971 (Ø12 mm)	
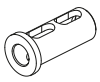	5995 (Ø16 mm)	

FAST-IN DRIVEN TOOLS
p. 506
p. 302

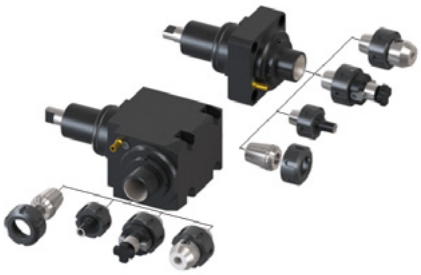

PROTECTION COVER

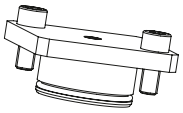

137-00249

NAKAMURA TOME (BMT55) - CMZ

Index of machines p. 361

FACE AND O.D. CUTTING HOLDER

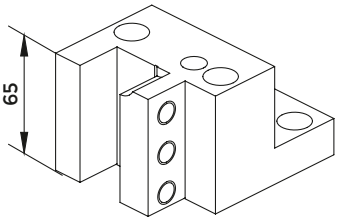

W1413 - 20x20 mm

FACE AND O.D. CUTTING HOLDER

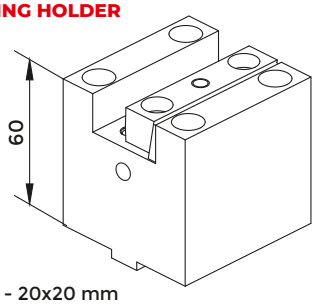

W1415 - 20x20 mm

QUALIFIED TOOL

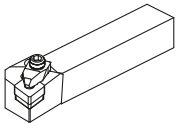

POLYGONAL TOOL HOLDER

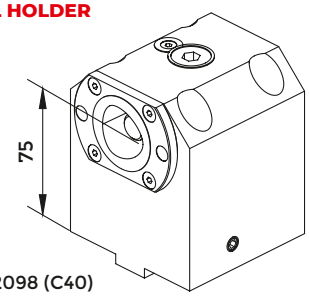

121-22098 (C40)

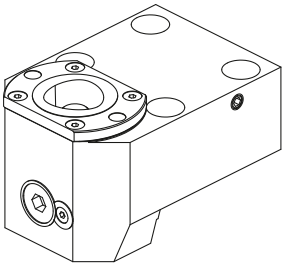

121-22099 (C40)

CONNECTION

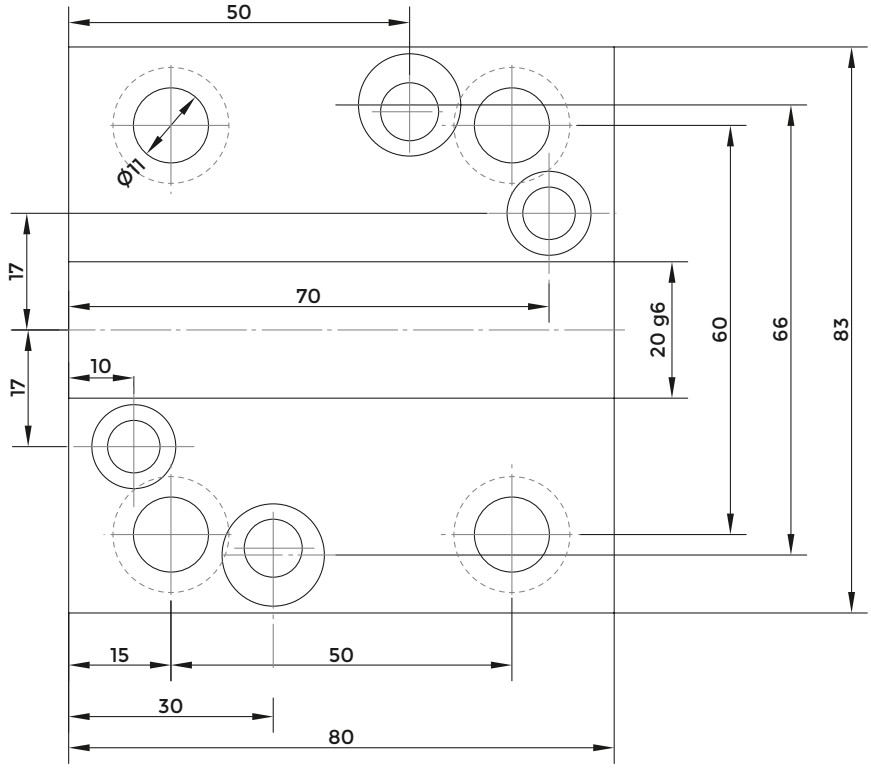

RADIAL TOOLHOLDER

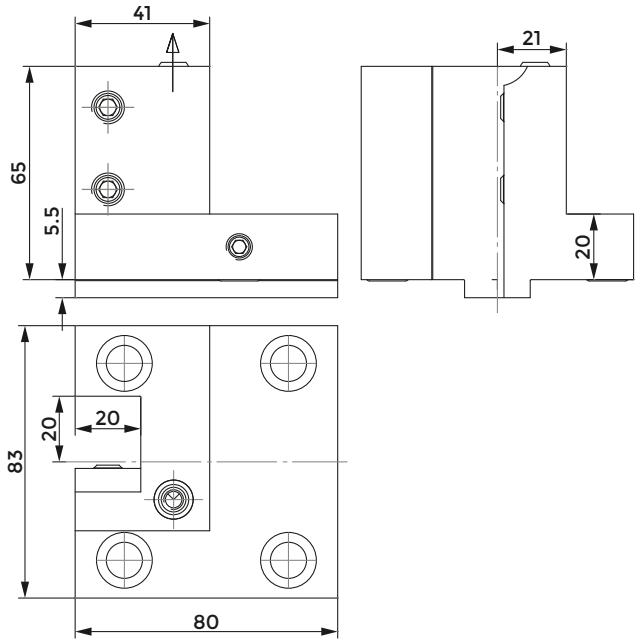

COD.	CLAMPING SCREW	COOLANT NOZZLE	O RING
W1431	811-102038	833-001080	823-101015

RADIAL TOOLHOLDER

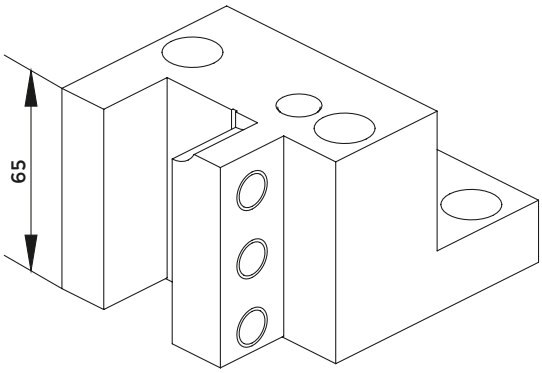

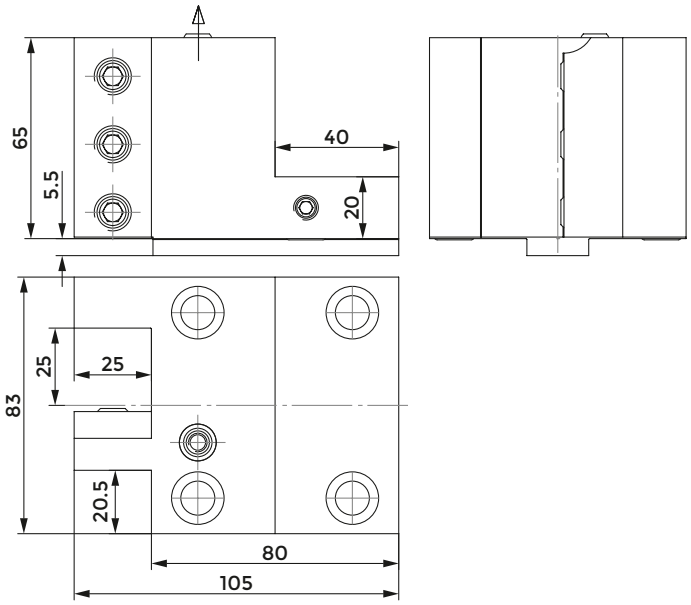

COD.	CLAMPING SCREW	COOLANT NOZZLE	O RING
Z2413	811-102044	833-001080	823-101015

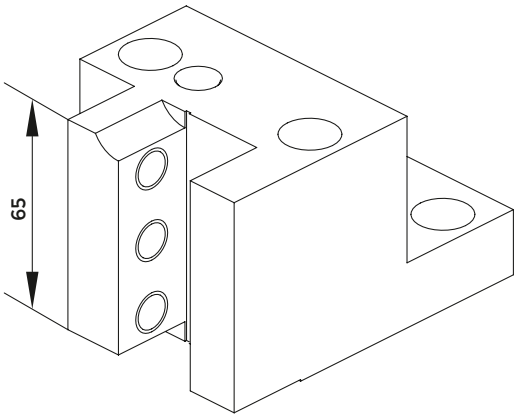

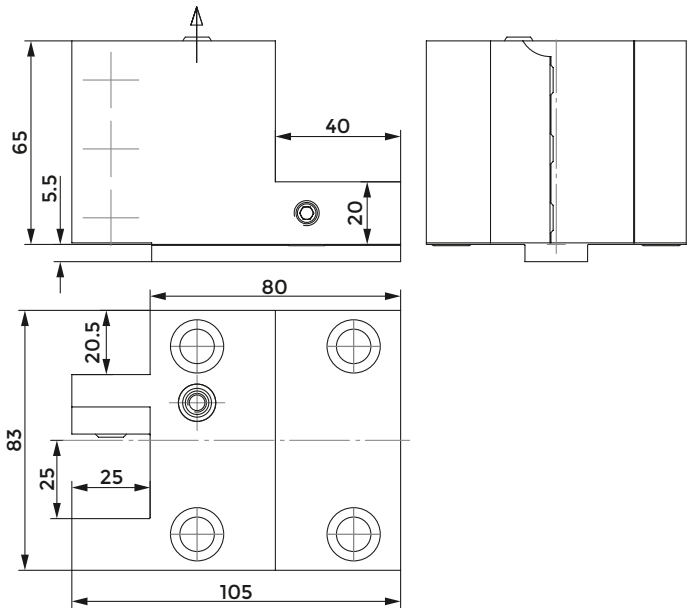

COD.	CLAMPING SCREW	COOLANT NOZZLE	O RING
Z2414	811-102044	833-001080	823-101015

RADIAL TOOLHOLDER

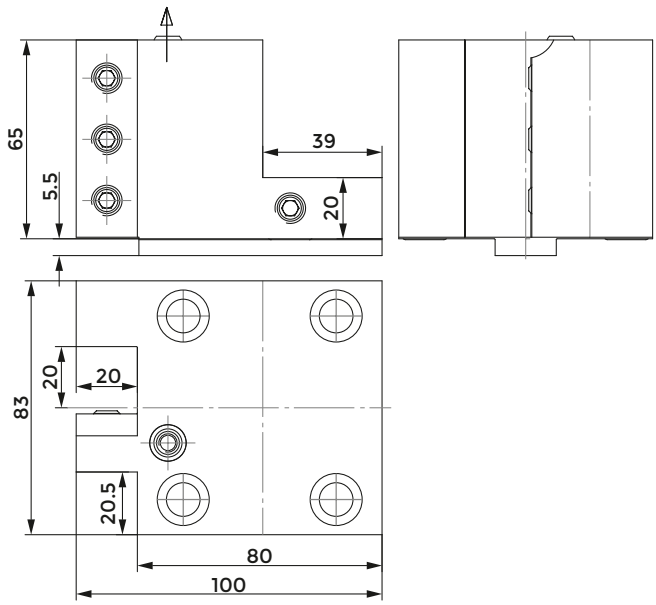

COD.	CLAMPING SCREW	COOLANT NOZZLE	O RING
W1413	811-102038	833-001080	823-101004

AXIAL TOOLHOLDER

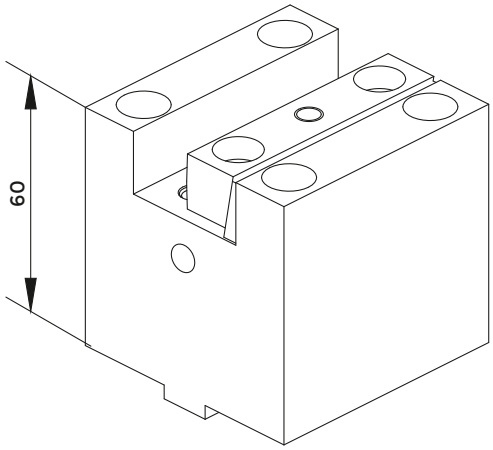

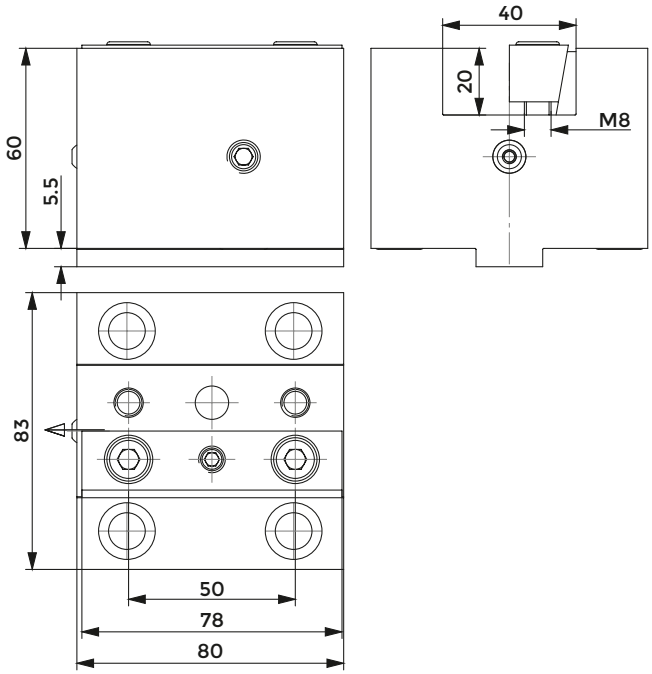

COD.	CLAMPING PLATE	COOLANT NOZZLE	O RING
W1415	832-007200	833-001100	823-101004

RADIAL TOOLHOLDER

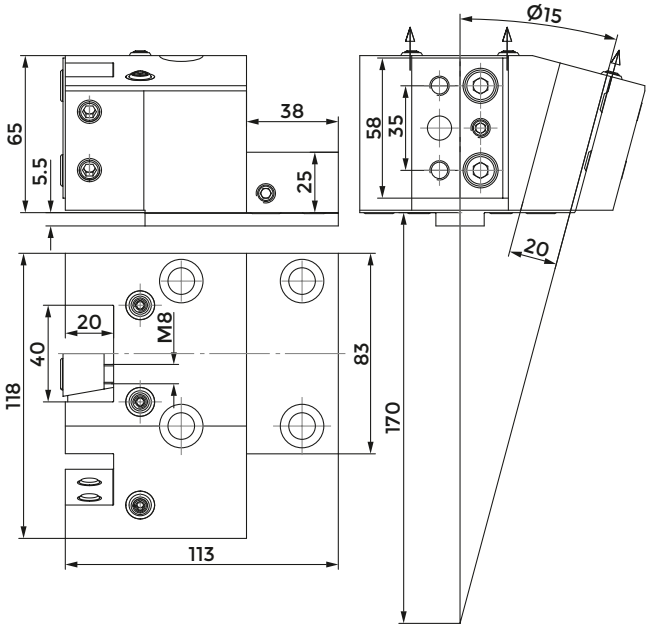

COD.	CLAMPING PLATE	CLAMPING SCREW	COOLANT NOZZLE	O RING 1 (D9X2)	O RING 2 (D6X2)
R1452	832-007160	811-102037	833-001080	823-101015	823-101082

CUT-OFF HOLDER

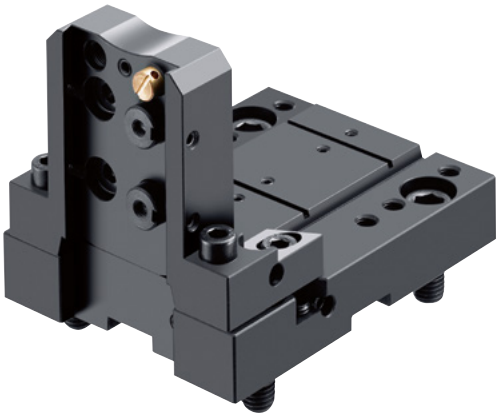

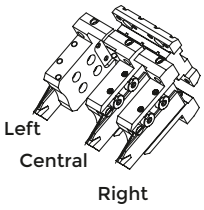

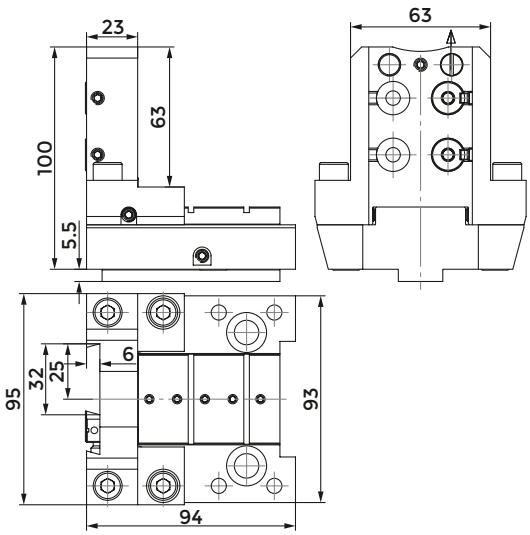

COD.	INTERNAL COOLING	COOLANT NOZZLE	O RING FOR COOLANT NOZZLE	O RING FOR BODY	O RING FOR COOLANT INTAKE	O RING INTERNAL COOLANT
121-22076	NO	833-001490	823-101058	823-101061	823-101015	-
121-22076-IC	SI	833-001490	823-101058	823-101061	823-101015	823-201140

COD.	SHIM PLATE	SCREW FOR PLATE	CLAMPING PIN	SPRING	CLAMPING SCREW	SCREW
121-22076	832-014448	811-108037	832-014450	824-300012	811-101028	811-104013
121-22076-IC	832-014448	811-108037	832-014450	824-300012	811-101028	811-104013

COMBI TOOLHOLDER WITH INTERNAL COOLANT FOR BORING BAR AND INSERT DRILL

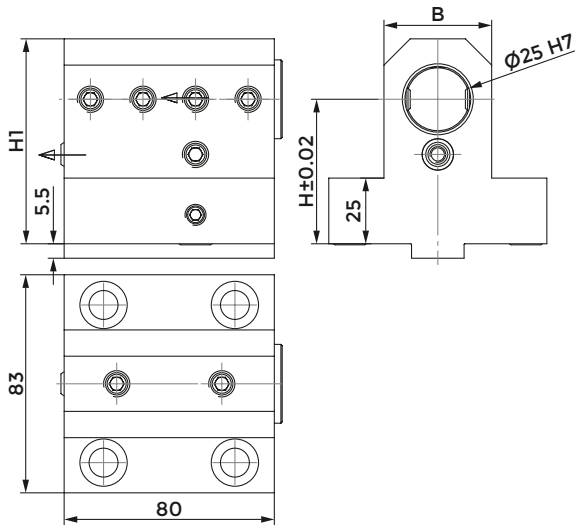

COD.	H	H1	B	CLAMPING SCREW 1 (M10X10)	CLAMPING SCREW 2 (M10X12)	COOLANT NOZZLE	SCREW PER INTERNAL COOLANT	O RING FOR COOLANT INTAKE	COVER	O RING COVER
W1417 D25	55	78	41	811-102035	-	833-001080	811-102038	823-101015	823-301150	823-201140
W4437 D25	75	98	41	811-102035	-	833-001080	811-102038	823-101015	823-301150	823-201140

DOUBLE TOOLHOLDER FOR BORING BAR

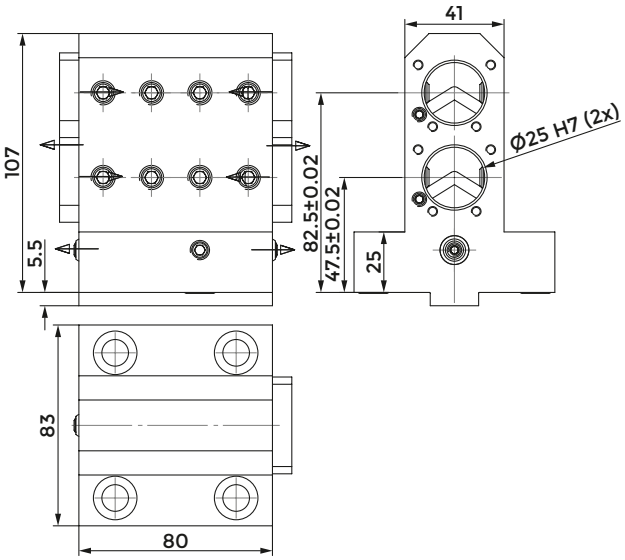

COD.	CLAMPING SCREW	COOLANT NOZZLE	O RING FOR COOLANT INTAKE	COVER	SCREW FOR COVER
R8418	811-102035	833-001080	823-101015	832-003295	811-101010

TREBLE TOOLHOLDER FOR BORING BAR

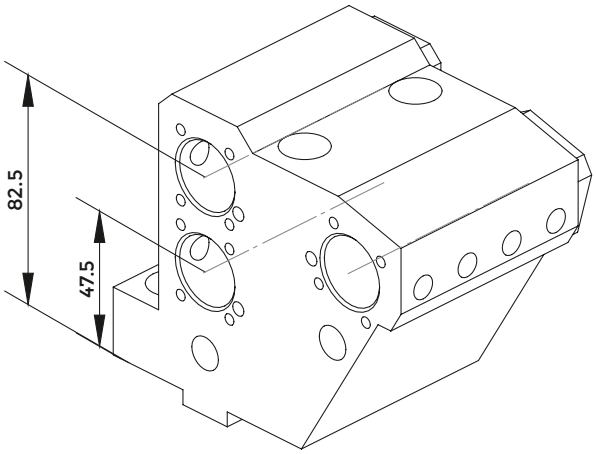

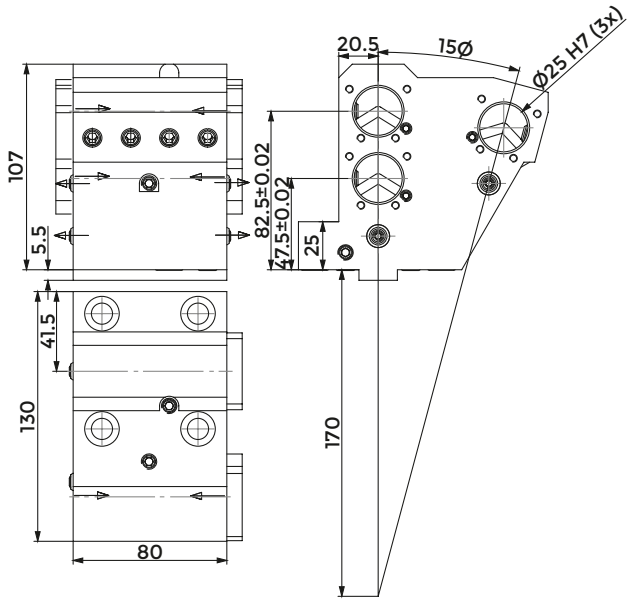

COD.	CLAMPING SCREW	COOLANT NOZZLE	O RING FOR COOLANT INTAKE1 (D10x2,5)	O RING FOR COOLANT INTAKE2 (D6x2)	COVER	SCREW FOR COVER
R8453	811-102035	833-001110	823-101004	823-101082	832-003295	811-101010

COMBI TOOLHOLDER WITH INTERNAL COOLANT FOR BORING BAR AND INSERT DRILL

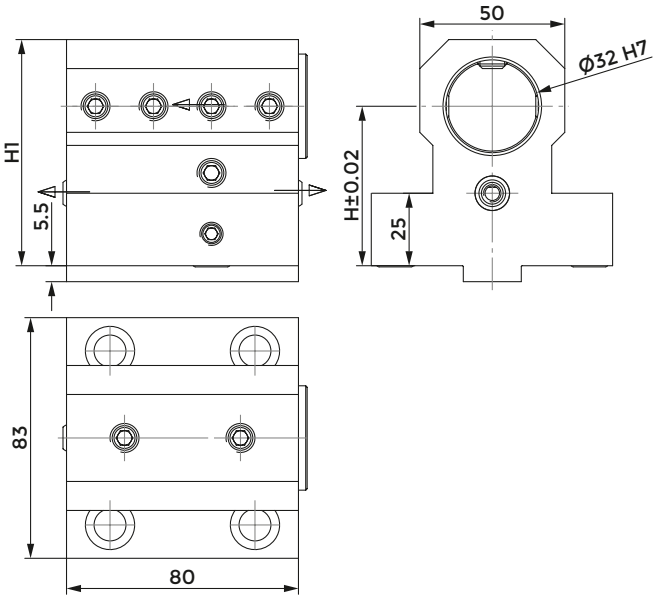

COD.	H	H1	CLAMPING SCREW	COOLANT NOZZLE	SCREW FOR INTERNAL COOLANT	O RING FOR COOLANT INTAKE	PLUG	O RING FOR PLUG	STOP PLATE	SCREW FOR PLATE
W1417 D32	55	78	811-102035	833-001080	811-102038	823-101015	823-301140	823-201080	-	-
Z2417 D32	70	96.5	811-102035	833-001080	811-102038	823-101015	823-301140	823-201080	-	-
Z7417 D32	80	106.5	811-102035	833-001080	811-102038	823-101015	823-301140	823-201080	832-003349	811-108029

POLIGONAL TOOLHOLDERS

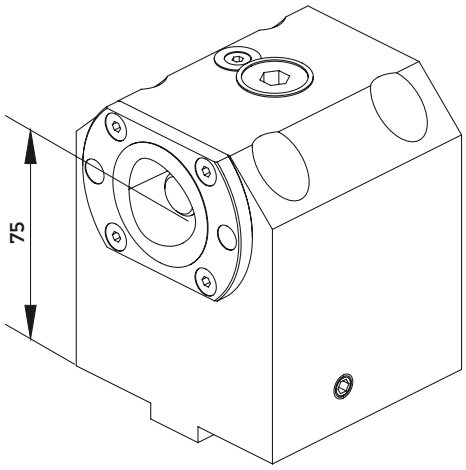

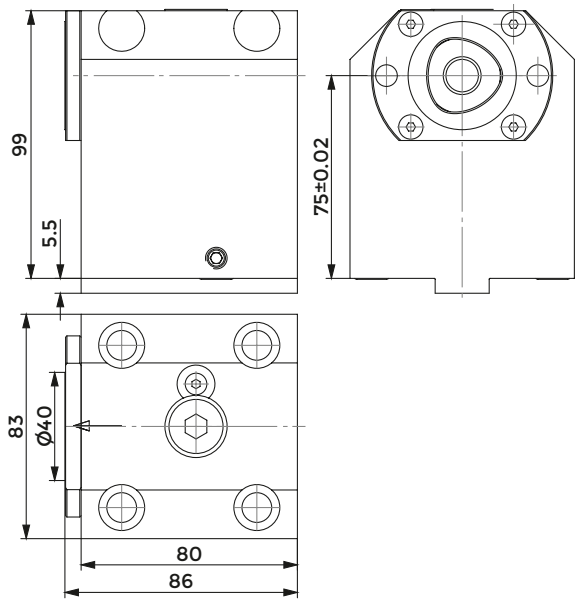

COD.	CAPTO	CLAMPING UNIT	O RING FOR COOLANT INTAKE
121-22098	C40	CXC40-10	823-101015

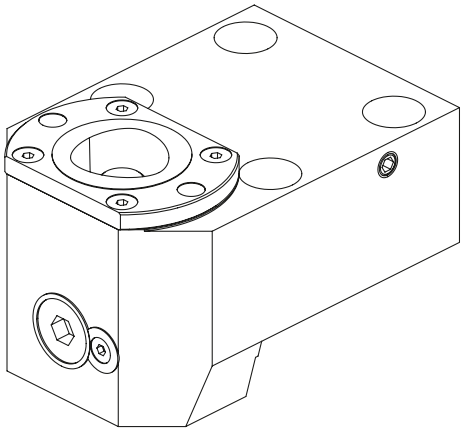

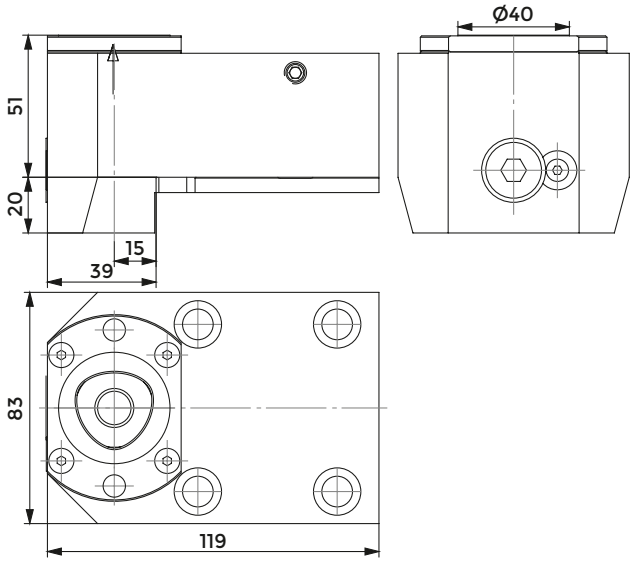

COD.	CAPTO	CLAMPING UNIT	O RING FOR COOLANT INTAKE
121-22099	C40	CXC40-10	823-101015

PROTECTION COVER

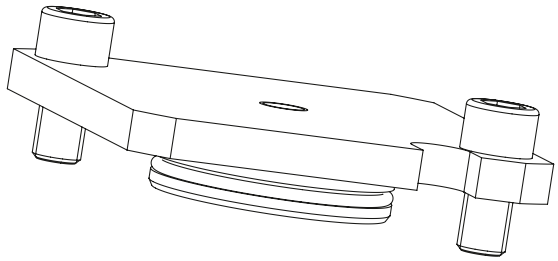

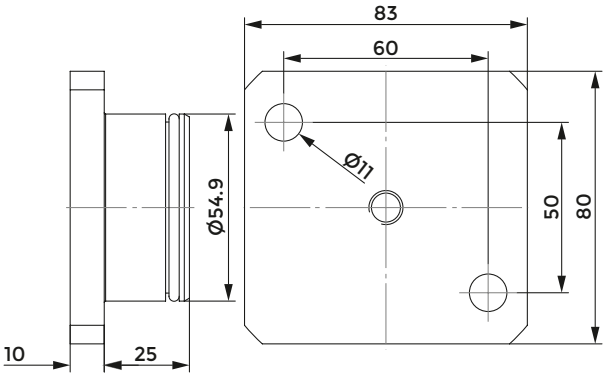

COD.	O RING
137-00249	823-101064

NAKAMURA TOME (BMT65)

Index of machines p. 361

FACE AND O.D. CUTTING HOLDER

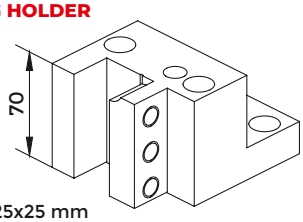

W2413 - 25x25 mm

QUALIFIED TOOL

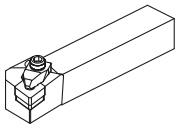

FACE AND O.D. CUTTING HOLDER

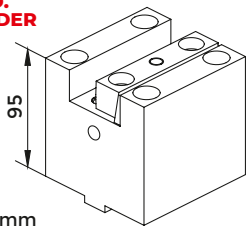

W2415 - 25X25 mm
W2415-IC - 25X25 mm

FAST-IN DRIVEN TOOLS

FAST-IN p. 506
DRIVEN TOOLS p. 302

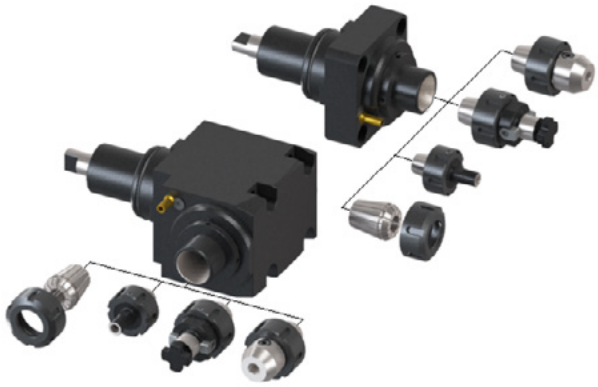

ACCESSORIES

COMBI TOOLHOLDER WITH INTERNAL COOLANT FOR BORING BAR AND INSERT DRILL

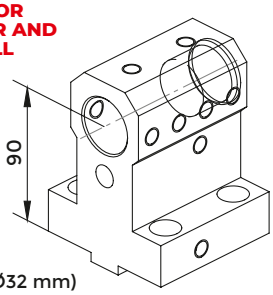

W2417 D32 (Ø32 mm)

PROTECTION COVER

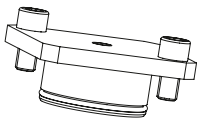

137-00250

BORING BAR SLEEVE p. 726	D25	D32
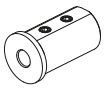	9600 (Ø8 mm) 9601 (Ø10 mm) 9602 (Ø12 mm)	9607 (Ø8 mm) 9608 (Ø10 mm) 9609 (Ø12 mm)
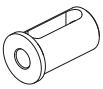	9604 (Ø16 mm)	9611 (Ø16 mm) 9613 (Ø20 mm) 9614 (Ø25 mm)
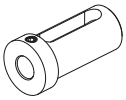	8759 (Ø12 mm) 8761 (Ø16 mm) 8763 (Ø20 mm)	8764 (Ø16 mm) 8766 (Ø20 mm) 8767 (Ø25 mm)
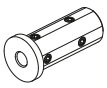	5968 (Ø6 mm) 5969 (Ø8 mm) 5970 (Ø10 mm) 5971 (Ø12 mm)	5316 (Ø8 mm) 5317 (Ø10 mm) 5318 (Ø12 mm) 5319 (Ø16 mm) 5320 (Ø20 mm)
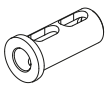	5995 (Ø16 mm)	5333 (Ø25 mm)

CONNECTION

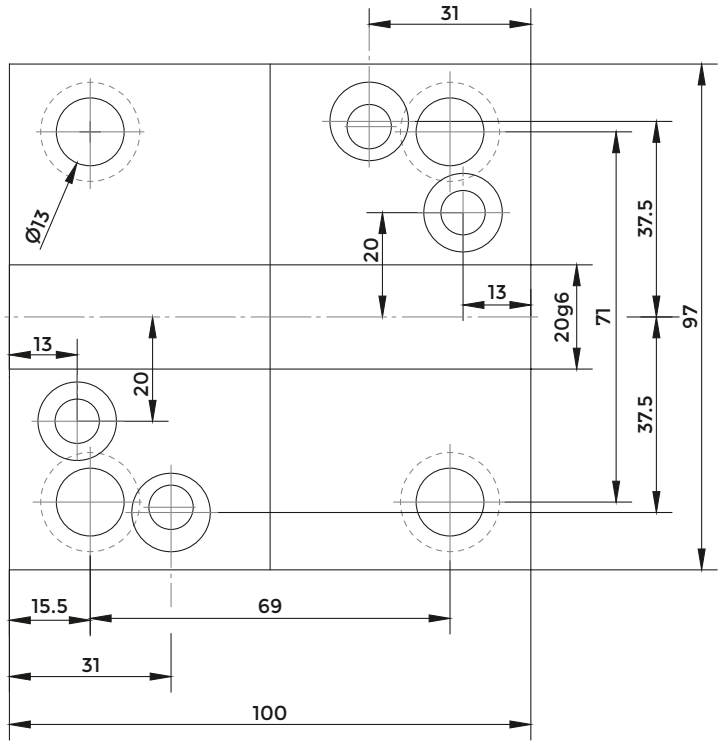

RADIAL TOOLHOLDER

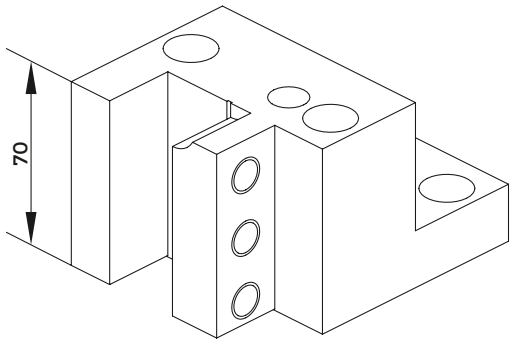

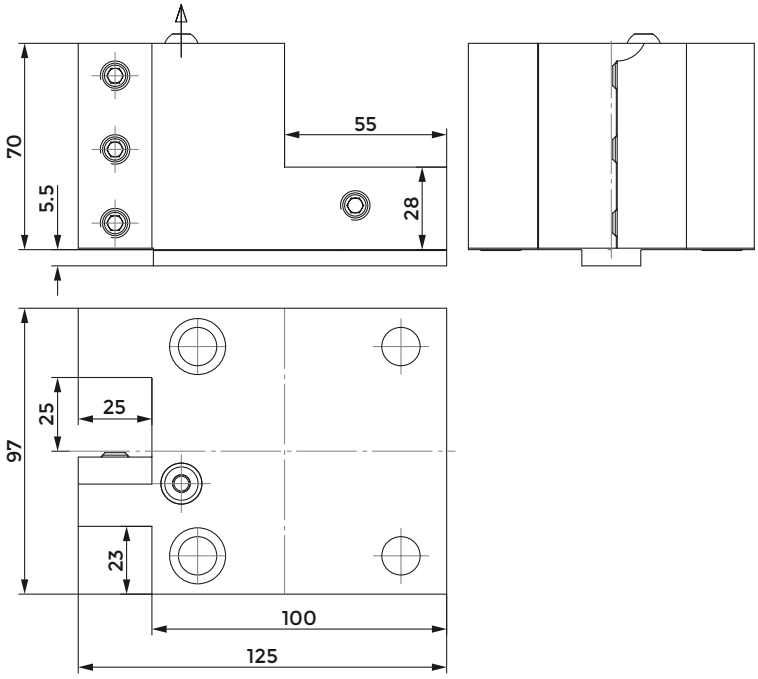

COD.	CLAMPING SCREW	COOLANT NOZZLE	O RING
W2413	811-102039	833-001120	823-101004

AXIAL TOOLHOLDER

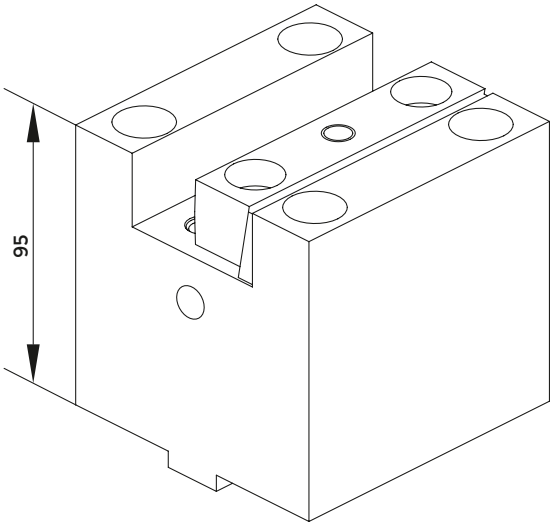

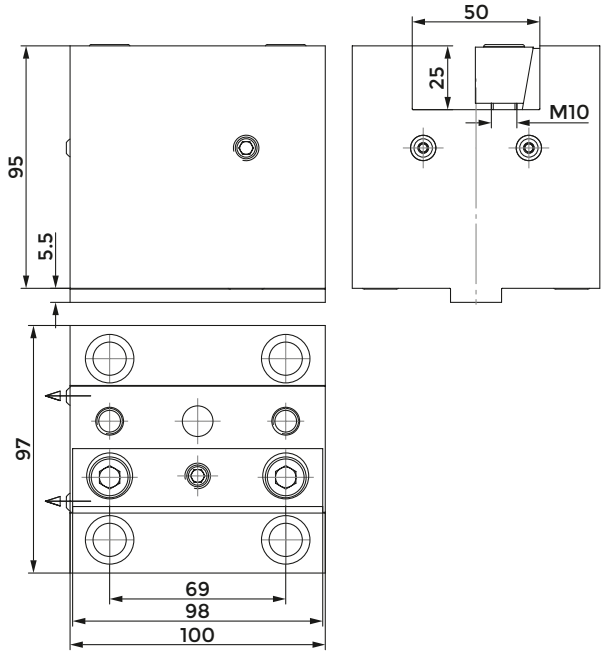

COD.	INTERNAL COOLANT	CLAMPING SCREW	COOLANT NOZZLE	O RING
W2415	NO	832-007220	833-001100	823-101004
W2415-IC	SI	832-007220	833-001100	823-101004

COMBI TOOLHOLDER WITH INTERNAL COOLANT FOR BORING BAR AND INSERT DRILL

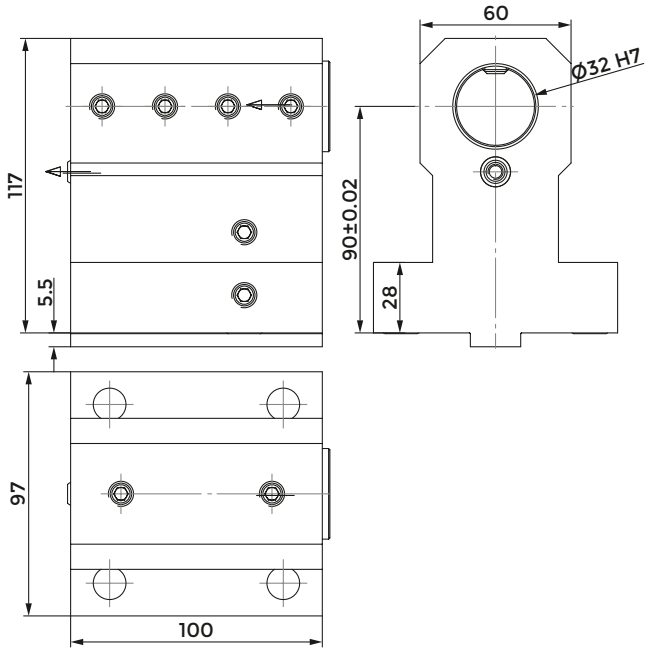

COD.	CLAMPING SCREW	COOLANT NOZZLE	SCREW INTERNAL COOLANT	O RING FOR COOLANT INTAKE	PLUG	O RING FOR PLUG
W2417 D32	811-102060	833-001080	811-102038	823-101004	823-301140	823-201080

PROTECTION COVER

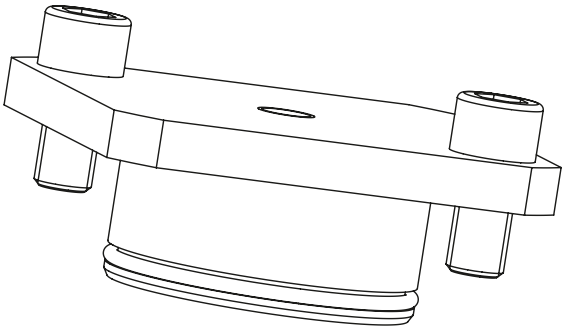

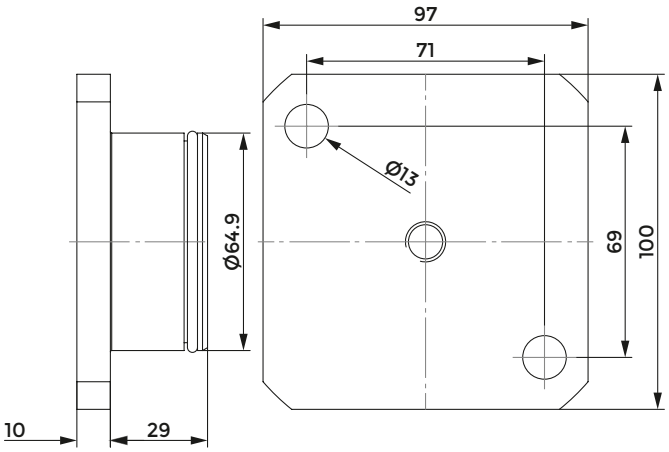

COD.	O RING
137-00250	823-101084

DOOSAN PUMA

Index of machines p. 360

FACE AND O.D. CUTTING HOLDER

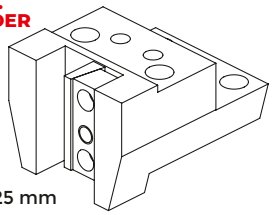

128-41501 - 25x25 mm

QUALIFIED TOOL

FACE AND O.D. CUTTING HOLDER

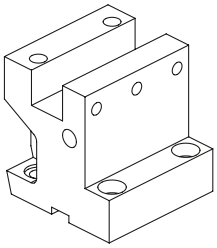

128-31501 - 25x25 mm

ACCESSORIES

BORING BAR SLEEVE

p. 726

TOOLHOLDER FOR BORING BAR

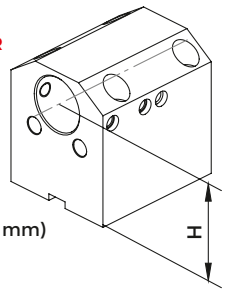

128-21501
(H=70 mm) - (Ø40 mm)

COMBI TOOLHOLDER WITH INTERNAL COOLANT FOR BORING BAR AND INSERT DRILL

COVER: 832-003216

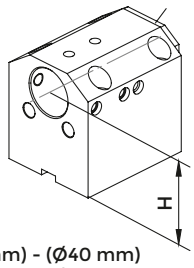

128-21502 (H=70 mm) - (Ø40 mm)
128-21522 (H=60 mm) - (Ø40 mm)

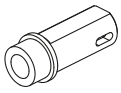

8958 <MT1>
8959 <MT2>
8960 <MT3>

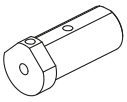

8916 (Ø10 mm)
8917 (Ø12 mm)
8918 (Ø16 mm)

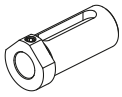

8919 (Ø20 mm)
8920 (Ø25 mm)
8921 (Ø32 mm)

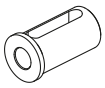

8897 (Ø20 mm)
8898 (Ø25 mm)

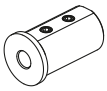

9615 (Ø8 mm)
9616 (Ø10 mm)
9617 (Ø12 mm)

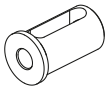

9619 (Ø16 mm)
9621 (Ø20 mm)
9622 (Ø25 mm)
9623 (Ø32 mm)

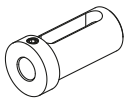

8768 (Ø16 mm)
8770 (Ø20 mm)
8771 (Ø25 mm)
8772 (Ø32 mm)

CONNECTION

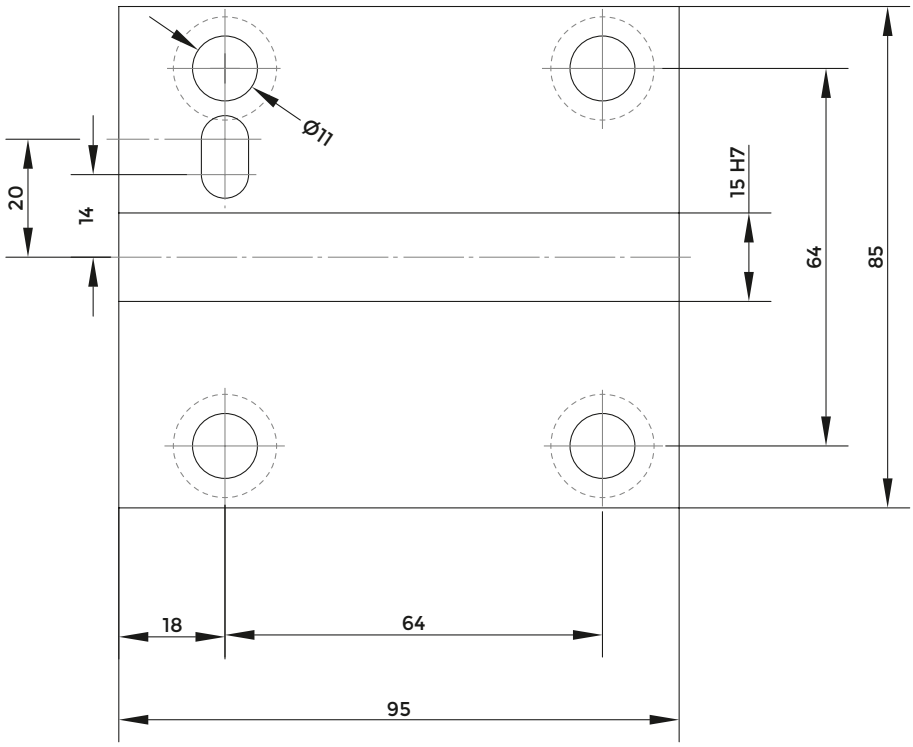

RADIAL TOOLHOLDER

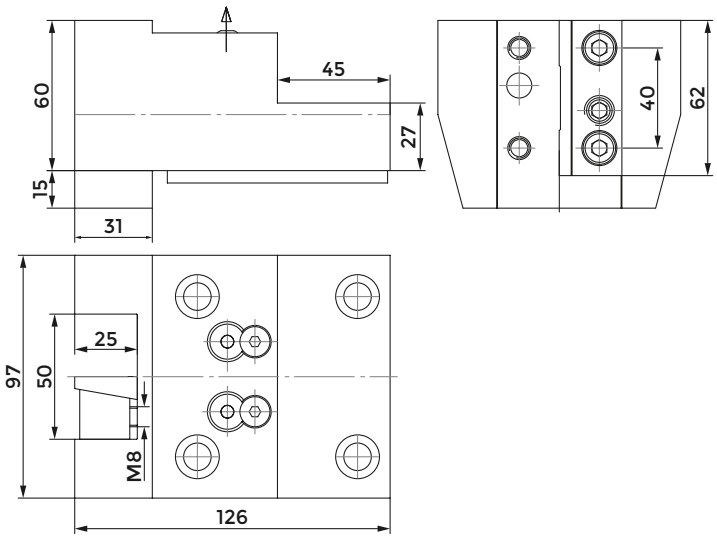

COD.	CLAMPING PLATE	KEY	SCREW FOR KEY	COOLANT BALL	SCREW FOR BALL
128-41501	832-018450	814-203230	811-101017	833-001470	811-108018

AXIAL TOOLHOLDER

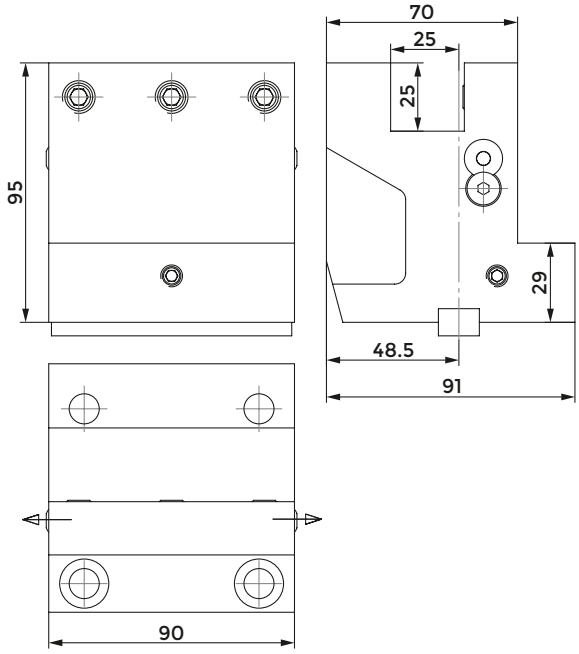

COD.	CLAMPING SCREW	KEY	SCREW FOR KEY	COOLANT BALL	SCREW FOR BALL
128-31501	811-102044	814-203230	811-101017	833-001470	811-108018

TOOLHOLDER FOR BORING BAR

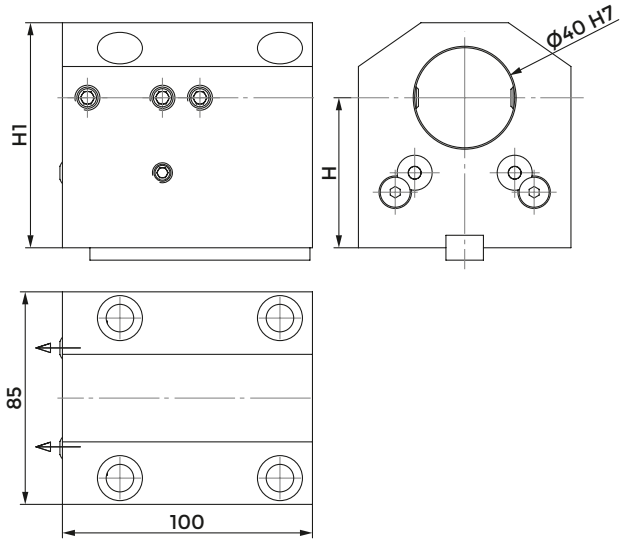

COD.	H	H1	CLAMPING SCREW	KEY	SCREW FOR KEY	COOLANT BALL	SCREW FOR BALL
128-21501	70	100	811-102038	814-203230	811-101017	833-001470	811-108018

COMBI TOOLHOLDER WITH INTERNAL COOLANT FOR BORING BAR AND INSERT DRILL

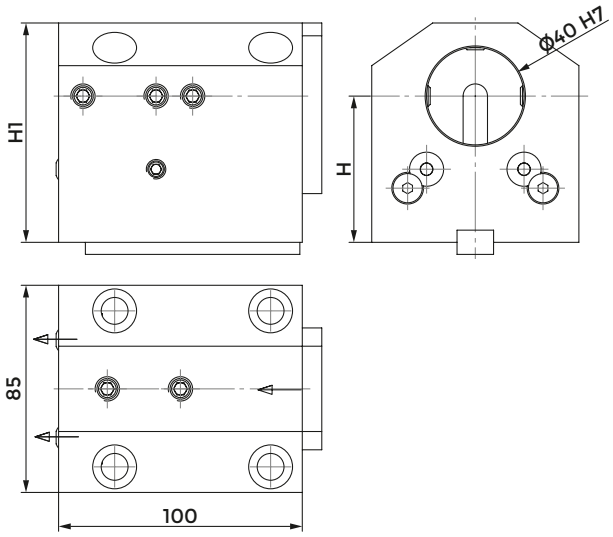

COD.	H	H1	CLAMPING SCREW 1 (M10X20)	CLAMPING SCREW 2 (M10X10)	KEY	SCREW FOR KEY	COOLANT BALL	SCREW FOR BALL	COVER	SCREW FOR COVER
						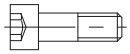				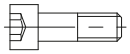
128-21502	70	100	811-102038	811-102035	814-203230	811-101017	833-001470	811-108018	832-003216	811-101017
128-21522	60	90	811-102038	811-102035	814-203230	811-101017	833-001470	811-108018	832-003216	811-101017

DOOSAN PUMA

Index of machines p. 360

MONTAGGIO DIRETTO SULLA TORRETTA

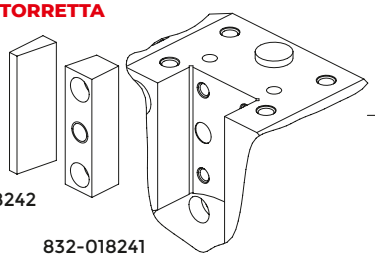

832-018242

832-018241

QUALIFIED TOOL

FACE AND O.D. CUTTING HOLDER

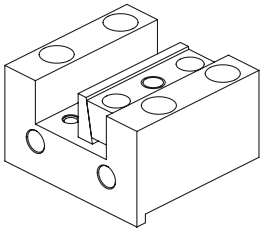

128-32009 - 25x25 mm

FACE AND O.D. CUTTING HOLDER

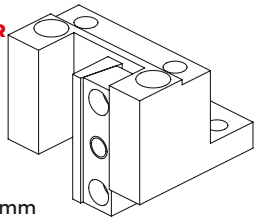

128-42012 - 25x25 mm

ACCESSORIES

BORING BAR SLEEVE

p. 726

TOOLHOLDER FOR BORING BAR

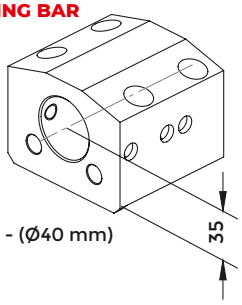

128-22024 - (Ø40 mm)

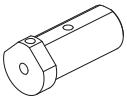

8916 (Ø10 mm)
8917 (Ø12 mm)
8918 (Ø16 mm)

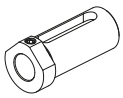

8919 (Ø20 mm)
8920 (Ø25 mm)
8921 (Ø32 mm)

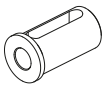

8897 (Ø20 mm)
8898 (Ø25 mm)

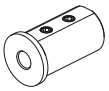

9615 (Ø8 mm)
9616 (Ø10 mm)
9617 (Ø12 mm)

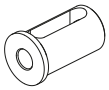

9619 (Ø16 mm)
9621 (Ø20 mm)
9622 (Ø25 mm)
9623 (Ø32 mm)

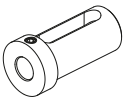

8768 (Ø16 mm)
8770 (Ø20 mm)
8771 (Ø25 mm)
8772 (Ø32 mm)

COMBI TOOLHOLDER WITH INTERNAL COOLANT FOR BORING BAR AND INSERT DRILL

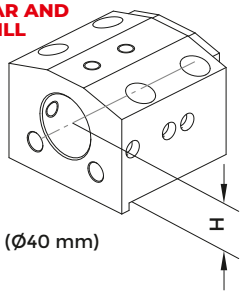

128-22025 - (Ø40 mm)

CONNECTION

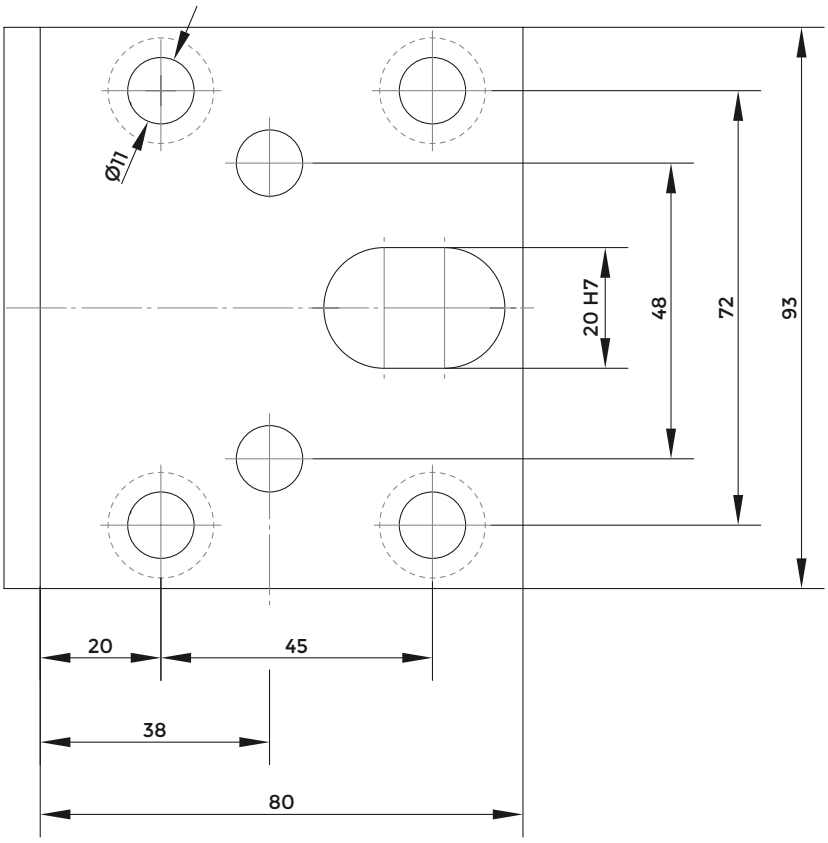

RADIAL TOOLHOLDER

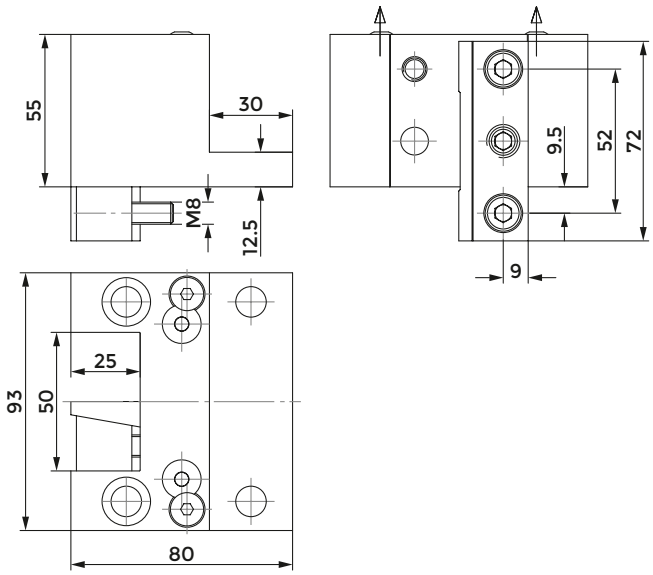

COD.	CLAMPING PLATE	COOLANT BALL	SCREW FOR BALL
128-42012	832-018240	833-001470	811-108018

AXIAL TOOLHOLDER

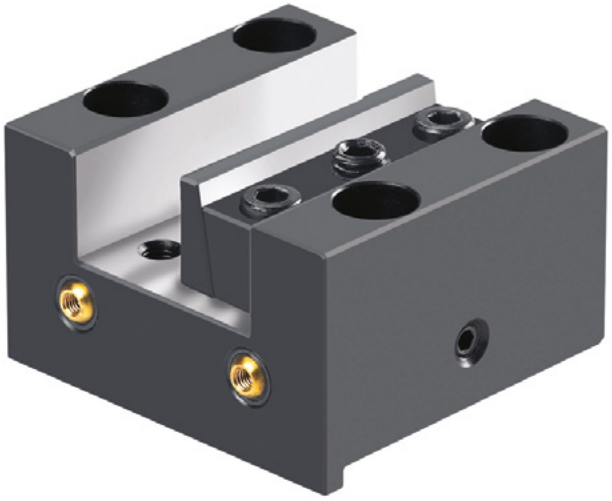

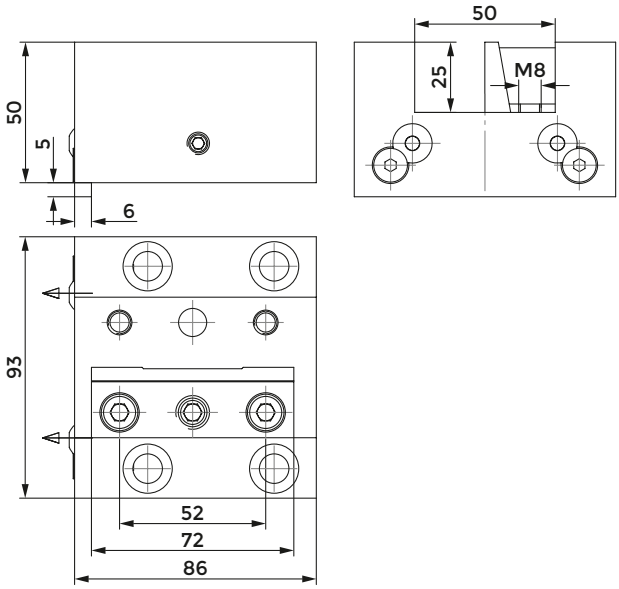

COD.	CLAMPING PLATE	COOLANT BALL	SCREW FOR BALL
128-32009	832-018240	833-001470	811-108018

TOOLHOLDER FOR BORING BAR

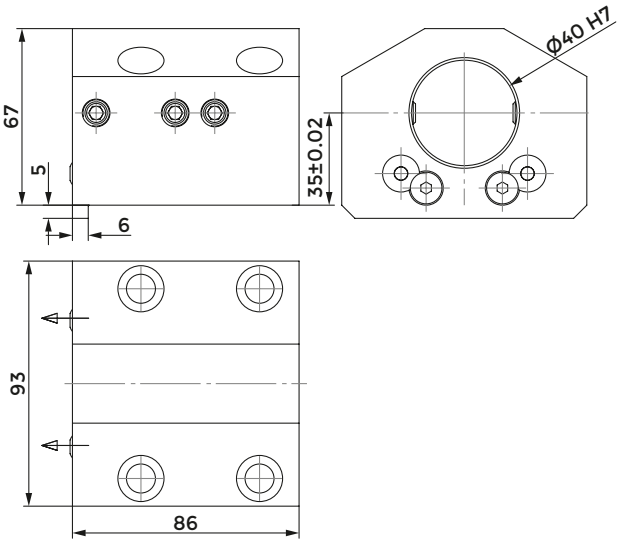

COD.	CLAMPING SCREW	COOLANT BALL	SCREW FOR BALL
128-22024	811-102039	833-001470	811-108018

COMBI TOOLHOLDER WITH INTERNAL COOLANT FOR BORING BAR AND INSERT DRILL

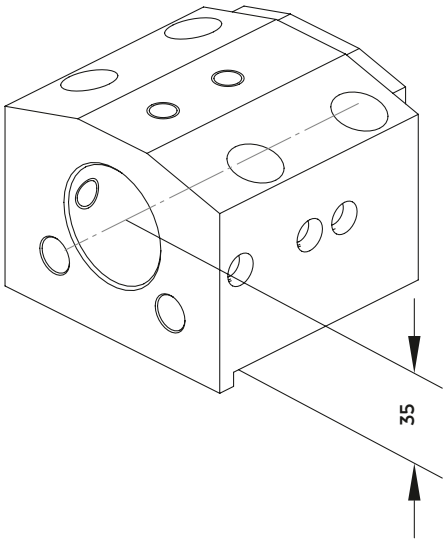

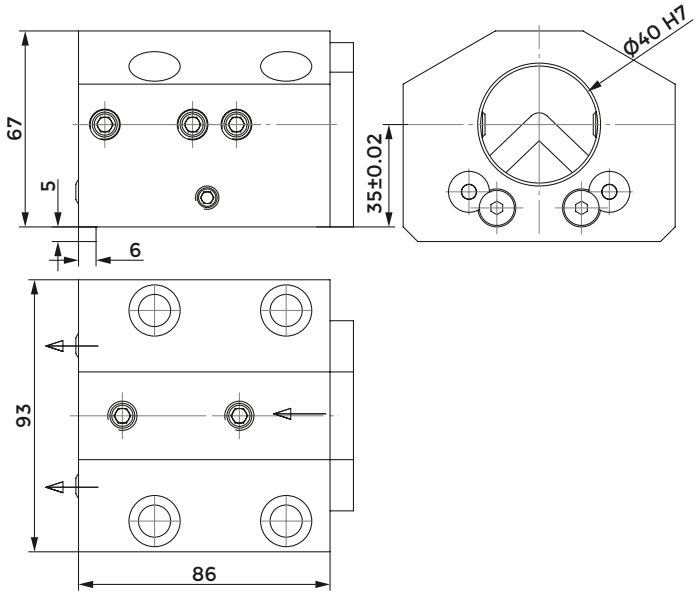

COD.	CLAMPING SCREW 1 (M10X25)	CLAMPING SCREW 2 (M10X12)	COOLANT BALL	SCREW FOR BALL	COVER	SCREW FOR COVER
128-22025	811-102039	811-102036	833-001470	811-108018	832-003193	811-108024

DOOSAN (BMT45) - HARDINGE SMEC

Index of machines p. 360

FACE AND O.D. CUTTING HOLDER

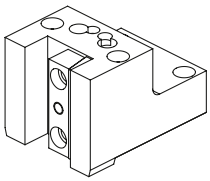

128-41518
20x20 mm

FACE AND O.D. CUTTING HOLDER

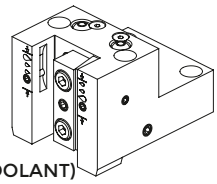

128-41518-IC
20x20 mm
(INTERNAL COOLANT)

FACE AND O.D. CUTTING HOLDER

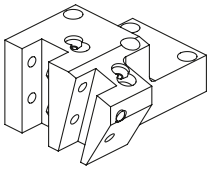

128-41519
20x20 mm

QUALIFIED TOOL

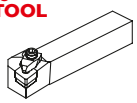

FACE AND O.D. CUTTING HOLDER

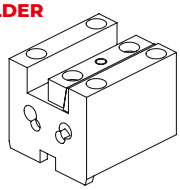

128-31511
20x20 mm

FACE AND O.D. CUTTING HOLDER

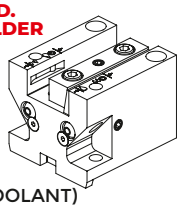

128-31511-IC
20x20 mm
(INTERNAL COOLANT)

CUT-OFF HOLDER

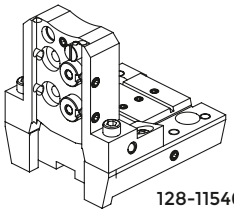

CUT-OFF TOOL

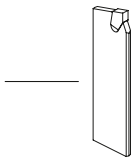

128-11546 - 26 mm

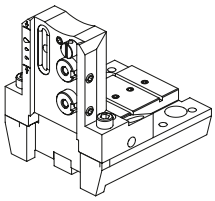

128-11546-IC
(INTERNAL COOLANT)

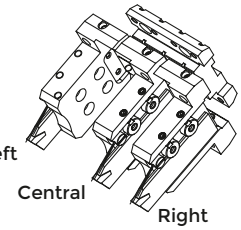

ACCESSORIES

TOOLHOLDER FOR BORING BAR

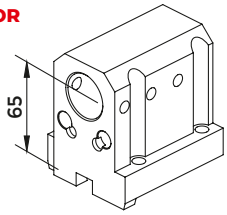

128-21529
Ø32 mm

COMBI TOOLHOLDER WITH INTERNAL COOLANT FOR BORING BAR AND INSERT DRILL

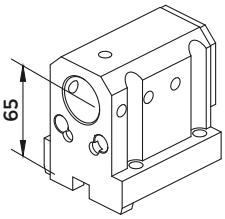

128-21530 D32
128-21547 D40

COMBI TOOLHOLDER WITH INTERNAL COOLANT FOR BORING BAR AND INSERT DRILL

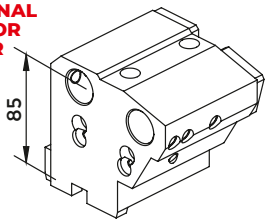

128-21531
2xØ25 mm

BORING BAR SLEEVE
p. 724

	D32	D40
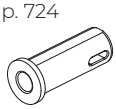	1376 <MT3> 1377 <MT2>	
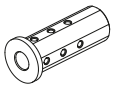	5316 (Ø8 mm) 5317 (Ø10 mm) 5318 (Ø12 mm) 5319 (Ø16 mm) 5320 (Ø20 mm)	
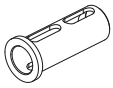	5333 (Ø25 mm)	
	9607 (Ø8 mm) 9608 (Ø10 mm) 9609 (Ø12 mm)	9615 (Ø8 mm) 9616 (Ø10 mm) 9617 (Ø12 mm)
	9611 (Ø16 mm) 9613 (Ø20 mm) 9614 (Ø25 mm)	9619 (Ø16 mm) 9621 (Ø20 mm) 9622 (Ø25 mm) 9623 (Ø32 mm)
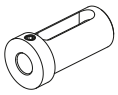	8764 (Ø16 mm) 8766 (Ø20 mm) 8767 (Ø25 mm)	8768 (Ø16 mm) 8770 (Ø20 mm) 8771 (Ø25 mm) 8772 (Ø32 mm)
	5969 (Ø8 mm) 5970 (Ø10 mm) 5971 (Ø12 mm)	
	5995 (Ø16 mm)	
	9600 (Ø8 mm) 9601 (Ø10 mm) 9602 (Ø12 mm)	
	9604 (Ø16 mm) 9606 (Ø20 mm)	
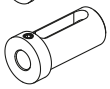	8759 (Ø12 mm) 8761 (Ø16 mm) 8763 (Ø20 mm)	

FAST-IN p. 506
DRIVEN TOOLS p. 302

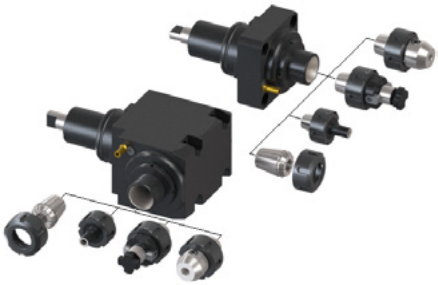

CONTROL PIN
p. 758

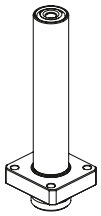

137-00197

PROTECTION COVER

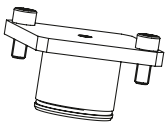

137-00252

CONNECTION

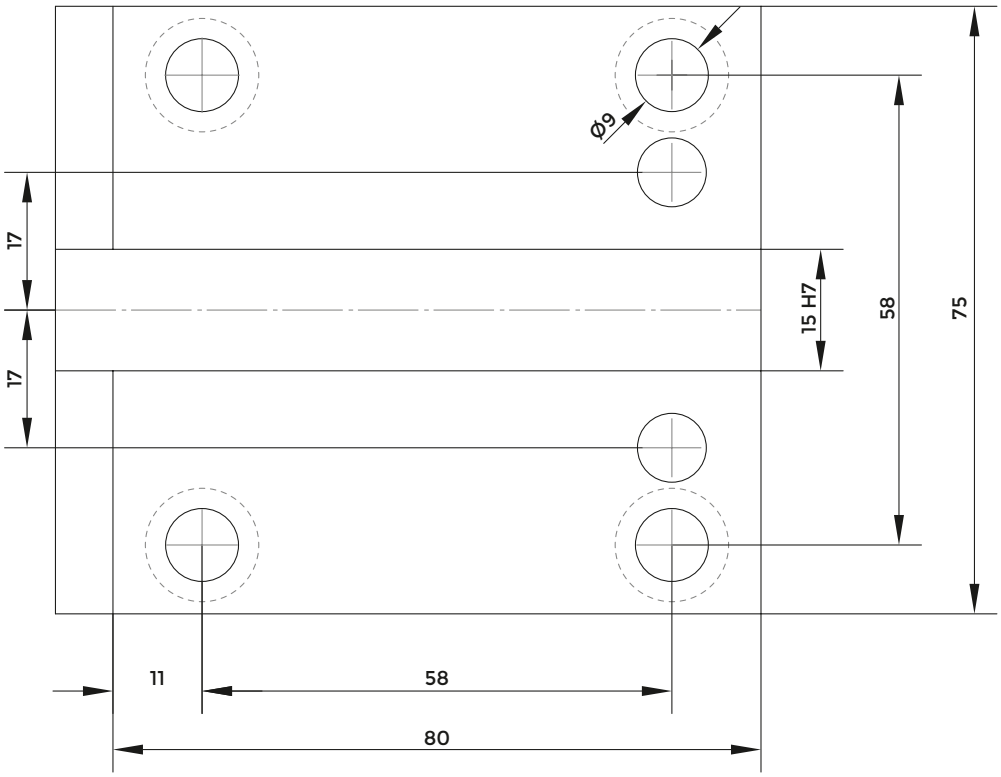

RADIAL TOOLHOLDER

IC VERSION

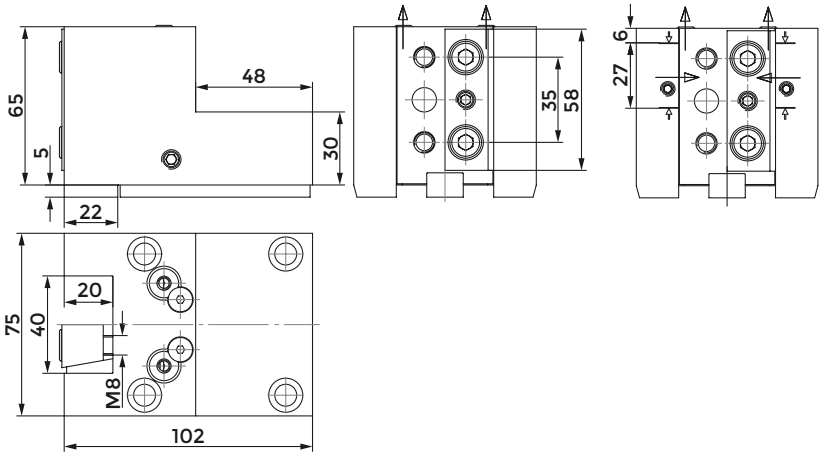

COD.	INTERNAL COOLANT	CLAMPING PLATE	KEY	SCREW FOR KEY	COOLANT BALL	SCREW FOR BALL
				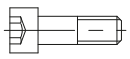		
128-41518	NO	832-007160	814-203450	811-101016	833-001410	811-108024
128-41518-IC	SI	832-007160	814-203450	811-101016	833-001410	811-108024

RADIAL TOOLHOLDER

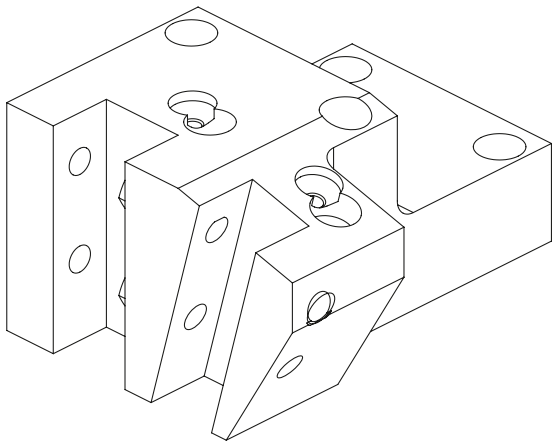

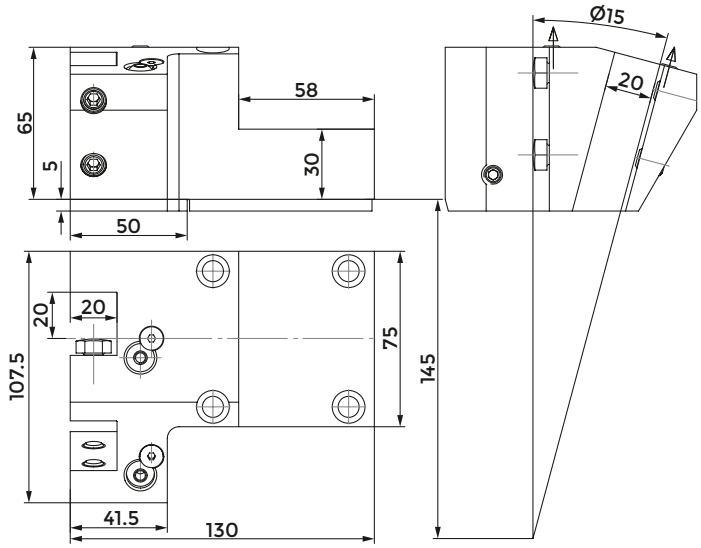

COD.	CLAMPING SCREW 0°	CLAMPING SCREW 15° M10X12	CLAMPING SCREW 15° M10X16	KEY	SCREW FOR KEY	COOLANT BALL	SCREW FOR BALL
					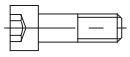		
128-41519	811-301128	811-102036	811-102037	814-203450	811-101016	833-001410	811-108024

AXIAL TOOLHOLDER

IC VERSION

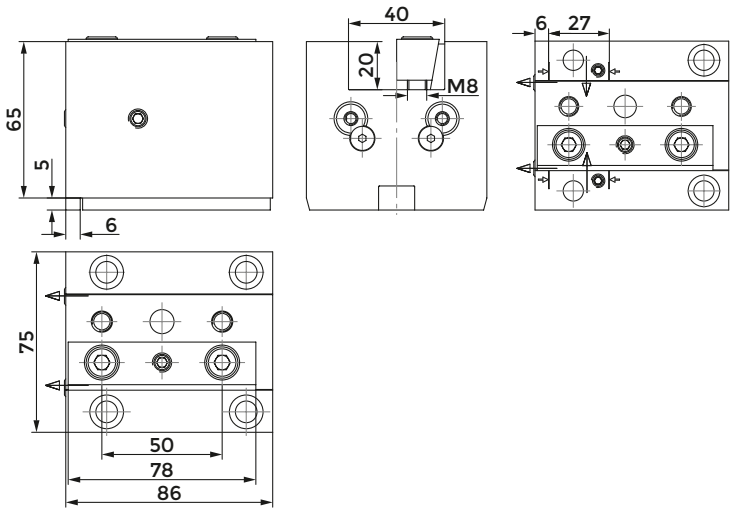

COD.	INTERNAL COOLANT	CLAMPING PLATE	KEY	SCREW FOR KEY	COOLANT BALL	SCREW FOR BALL
				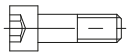		
128-31511	NO	832-007200	814-203450	811-101016	833-001410	811-108024
128-31511-IC	SI	832-007200	814-203450	811-101016	833-001410	811-108024

CUT-OFF HOLDER

IC VERSION

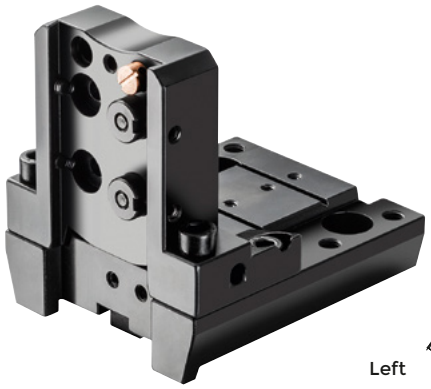

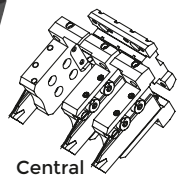

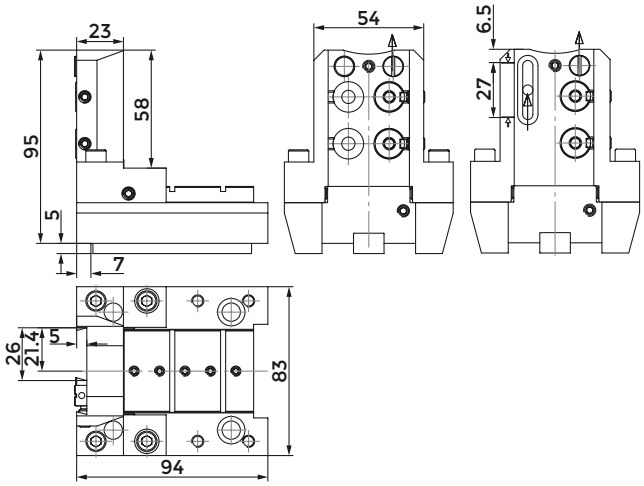

COD.	INTERNAL COOLANT	KEY	SCREW FOR KEY	COOLANT NOZZLE	O RING COOLANT BALL	O RING FOR INTERNAL COOLANT
128-11546	NO	814-203450	811-101015	833-001490	823-101058	-
128-11546-IC	SI	814-203450	811-101015	833-001490	823-101058	823-201140

COD.	O RING FOR BODY	SHIM PLATE	SCREW FOR PLATE	CLAMPING PIN	SPRING	CLAMPING SCREW	SCREW
128-11546	823-101061	832-014448	811-108037	832-014447	824-300012	811-101028	811-104013
128-11546-IC	823-101061	832-014448	811-108037	832-014447	824-300012	811-101028	811-104013

TOOLHOLDER FOR BORING BAR

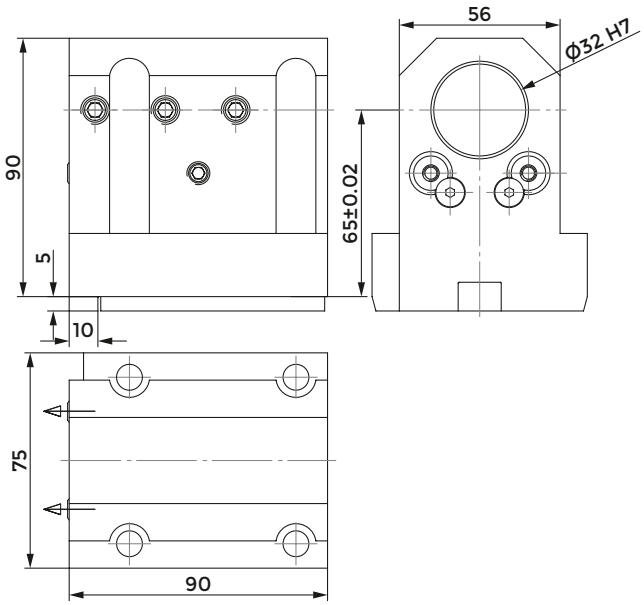

COD.	CLAMPING SCREW	KEY	SCREW FOR KEY	COOLANT BALL	SCREW FOR BALL
128-21529	811-102036	814-203450	811-101016	833-001410	811-108024

COMBI TOOLHOLDER WITH INTERNAL COOLANT FOR BORING BAR AND INSERT DRILL

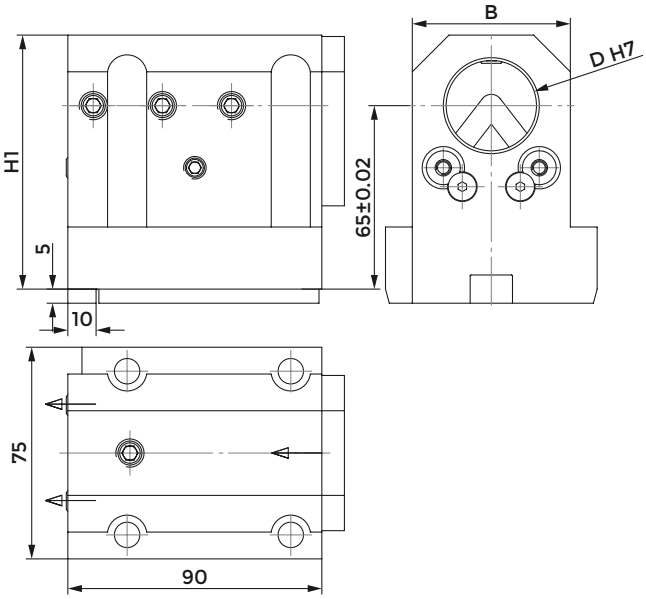

COD.	D	B	H1	CLAMPING SCREW 1 (M10X12)	CLAMPING SCREW 2 (M10X10)	KEY	SCREW FOR KEY	COOLANT BALL	SCREW FOR BALL	COVER	SCREW FOR COVER
128-21530	32	56	90	811-102036	811-102035	814-203450	811-101016	833-001410	811-108024	832-003361	811-101016
128-21547	40	63	94	811-102036	811-102035	814-203450	811-101016	833-001410	811-108024	832-003398	811-101016

COMBI TOOLHOLDER WITH INTERNAL COOLANT FOR BORING BAR AND INSERT DRILL

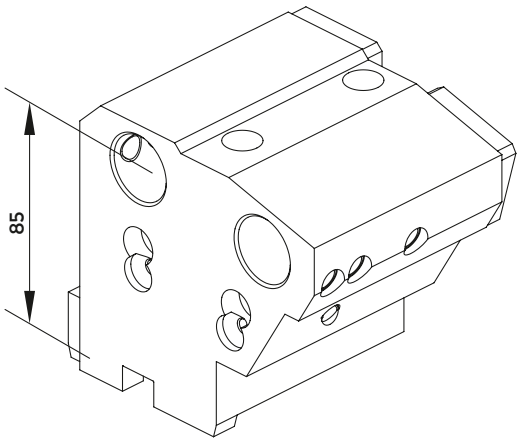

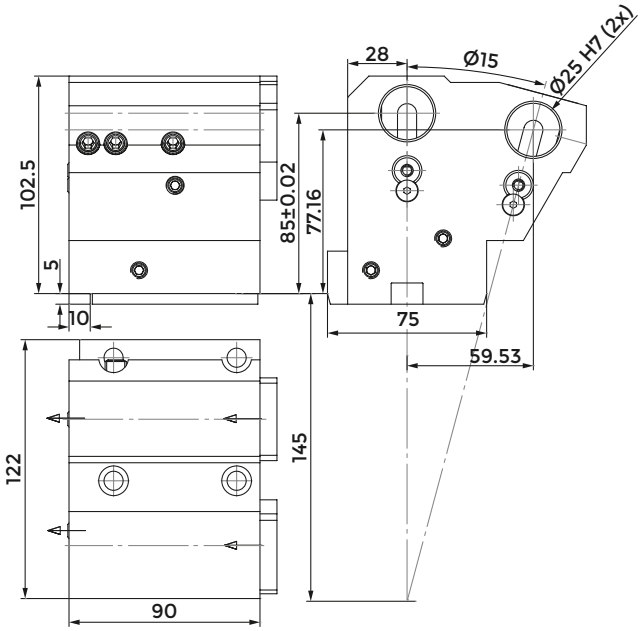

COD.	CLAMPING SCREW 1 (M10X12)	CLAMPING SCREW 2 (M10X10)	KEY	SCREW FOR KEY	COOLANT BALL	SCREW FOR BALL	COVER	SCREW FOR COVER
128-21531	811-102037	811-102036	814-203450	811-101016	833-001410	811-108024	832-003367	811-101010

PROTECTION COVER

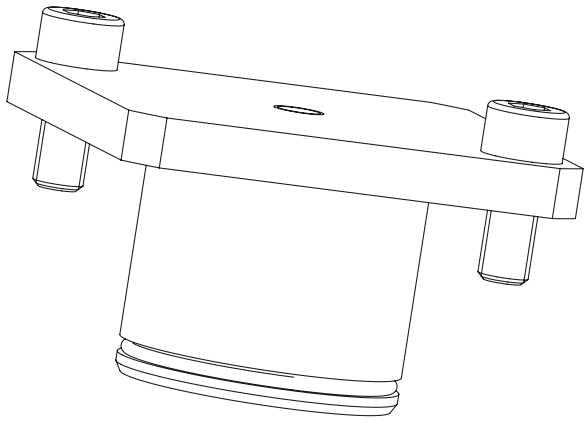

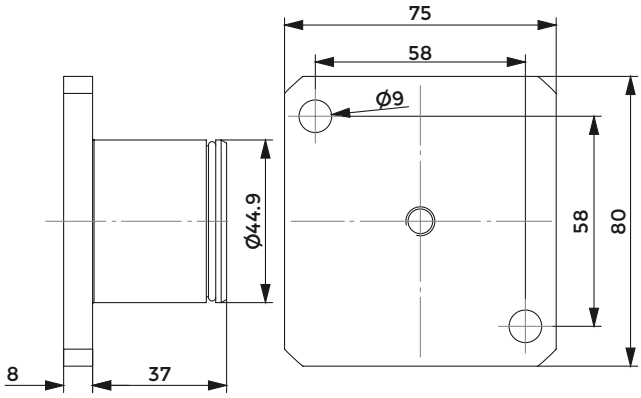

COD.	O RING
137-00252	823-101066

DOOSAN (BMT55) - SAMSUNG - HARDINGE HYUNDAI WIA - HWACHEON - VICTOR

Index of machines p. 360

FACE AND O.D. CUTTING HOLDER

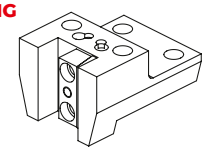

128-41520 - 25x25 mm
128-41531 - 20x20 mm

FACE AND O.D. CUTTING HOLDER

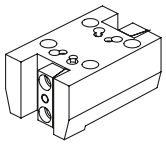

128-41521
25x25 mm
128-41521-IC
25x25 mm

FACE AND O.D. CUTTING HOLDER

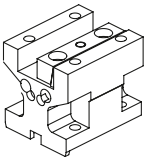

128-31512
25x25 mm

QUALIFIED TOOL

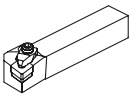

FACE AND O.D. CUTTING HOLDER

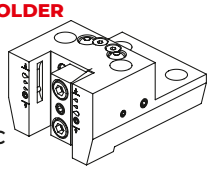

128-41520-IC
25x25 mm
(INTERNAL COOLANT)

FACE AND O.D. CUTTING HOLDER

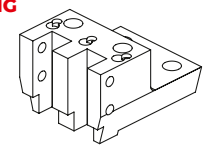

128-41522
25x25 mm

FACE AND O.D. CUTTING HOLDER

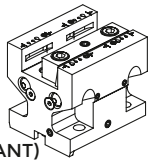

128-31512-IC
25x25 mm
(INTERNAL COOLANT)

FAST-IN p. 506
DRIVEN TOOLS p. 302

ACCESSORIES

TOOLHOLDER FOR BORING BAR

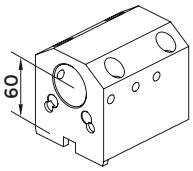

128-21532
Ø40 mm

COMBI TOOLHOLDER WITH INTERNAL COOLANT FOR BORING BAR AND INSERT DRILL

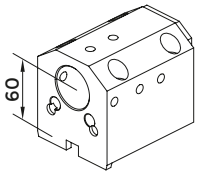

128-21533
Ø40 mm

COMBI TOOLHOLDER WITH INTERNAL COOLANT FOR BORING BAR AND INSERT DRILL

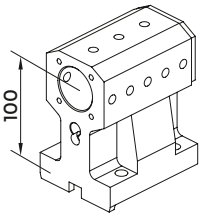

128-21534
Ø40 mm

COMBI TOOLHOLDER WITH INTERNAL COOLANT FOR BORING BAR AND INSERT DRILL

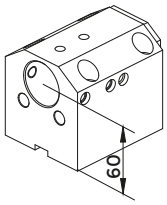

128-21522
Ø40 mm

COMBI TOOLHOLDER WITH INTERNAL COOLANT FOR BORING BAR AND INSERT DRILL

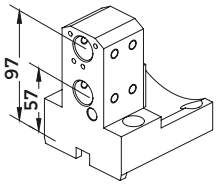

128-21535
2xØ20 mm

BORING BAR SLEEVE
p. 726

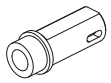

8958 <MT1>
8959 <MT2>
8960 <MT3>

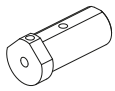

8916 (Ø10 mm)
8917 (Ø12 mm)
8918 (Ø16 mm)

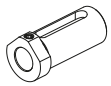

8919 (Ø20 mm)
8920 (Ø25 mm)
8921 (Ø32 mm)

8897 (Ø20 mm)
8898 (Ø25 mm)
8899 (Ø32 mm)

9615 (Ø8 mm)
9616 (Ø10 mm)
9617 (Ø12 mm)

9619 (Ø16 mm)
9621 (Ø20 mm)
9622 (Ø25 mm)
9623 (Ø32 mm)

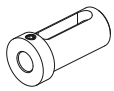

8768 (Ø16 mm)
8770 (Ø20 mm)
8771 (Ø25 mm)
8772 (Ø32 mm)

CUT-OFF HOLDER

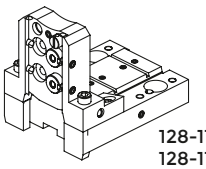

CUT-OFF TOOL

128-11548 - 26 mm
128-11549 - 32 mm

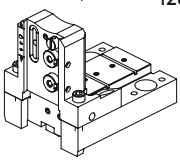

128-11548-IC
(INTERNAL COOLANT)
128-11549-IC
(INTERNAL COOLANT)

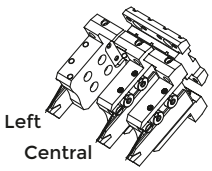

POLYGONAL TOOL HOLDER C40

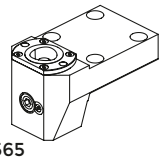

128-11565

POLYGONAL TOOL HOLDER C40

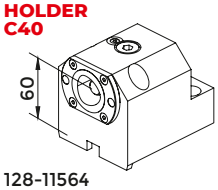

128-11564

CONTROL PIN
p. 758

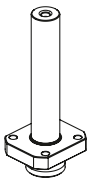

137-00198

PROTECTION COVER

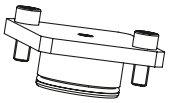

137-00253

CONNECTION

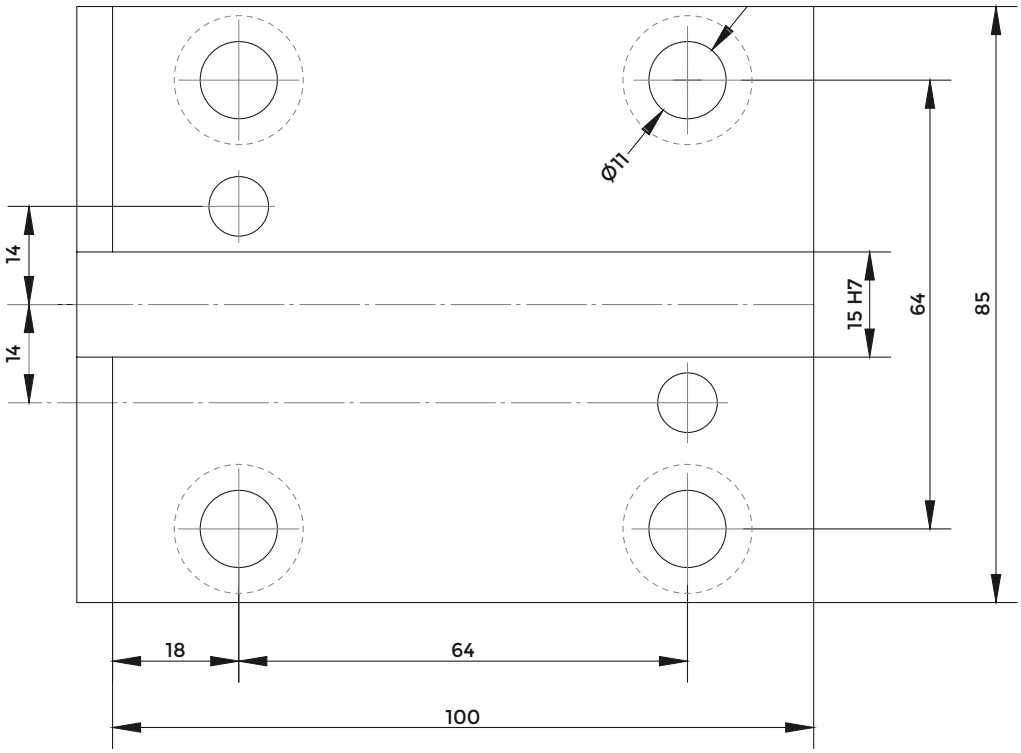

RADIAL TOOLHOLDER

IC VERSION

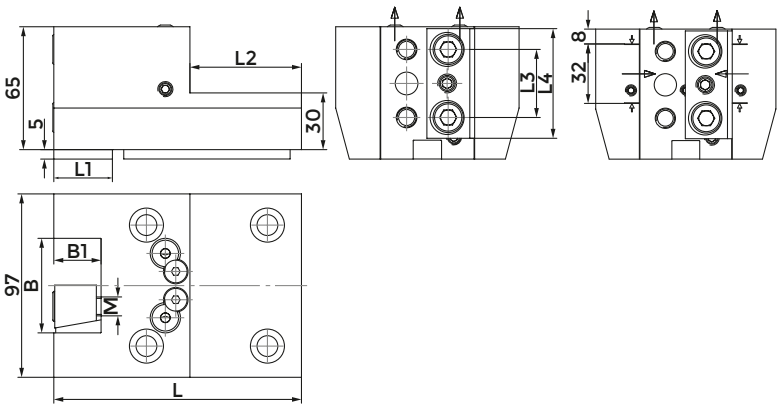

COD.	INTERNAL COOLANT	B	B1	L	L1	L2	L3	L4	M	CLAMPING PLATE	KEY	SCREW FOR KEY	COOLANT BALL	SCREW FOR BALL
											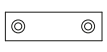	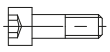		
128-41520	NO	50	25	131	31	59	36	58	M10	832-007570	814-203230	811-101016	833-001470	811-108018
128-41520-IC	SI	50	25	131	31	59	36	58	M10	832-007570	814-203230	811-101016	833-001470	811-108018
128-41531	NO	40	20	109	9	50	35	58	M8	832-007160	814-203230	811-101016	833-001470	811-108018

RADIAL TOOLHOLDER

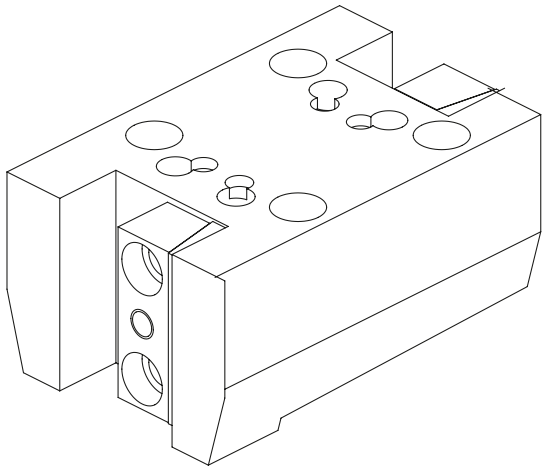

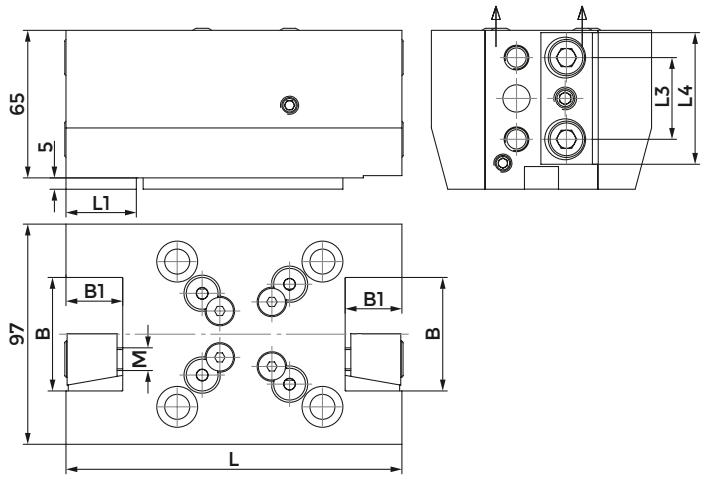

COD.	INTERNAL COOLANT	B	B1	L	L1	L3	L4	M	CLAMPING PLATE	KEY	SCREW FOR KEY	COOLANT BALL	SCREW FOR BALL
128-41521	NO	50	25	148	31	36	58	M10	832-007570	814-203230	811-101016	833-001470	811-108018
128-41521-IC	SI	50	25	148	31	36	58	M10	832-007570	814-203230	811-101016	833-001470	811-108018

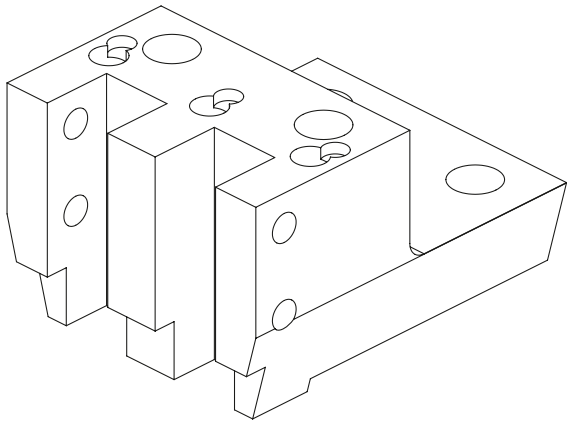

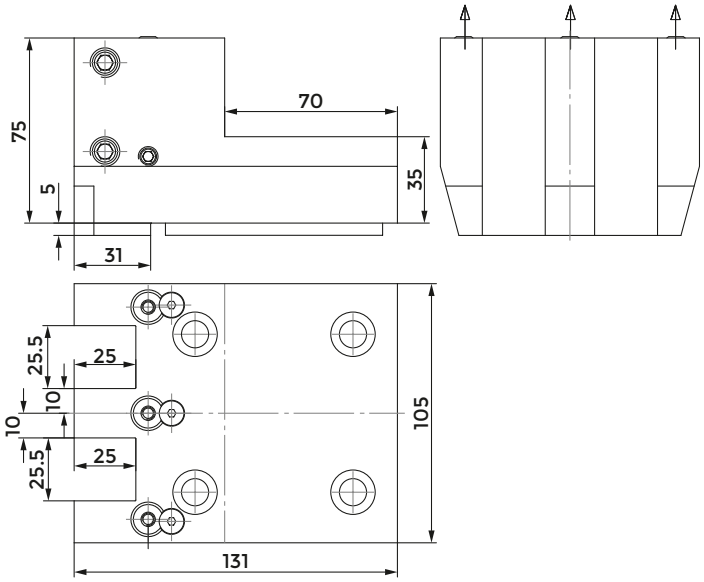

COD.	CLAMPING SCREW	KEY	SCREW FOR KEY	COOLANT BALL	SCREW FOR BALL
128-41522	811-102043	814-203230	811-101016	833-001410	811-108024

AXIAL TOOLHOLDER

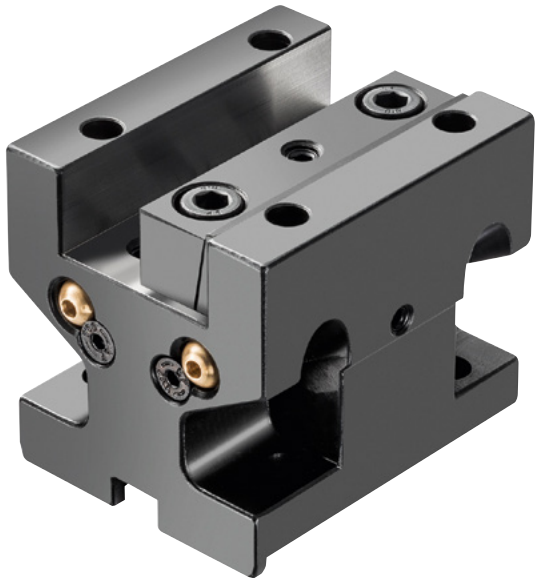

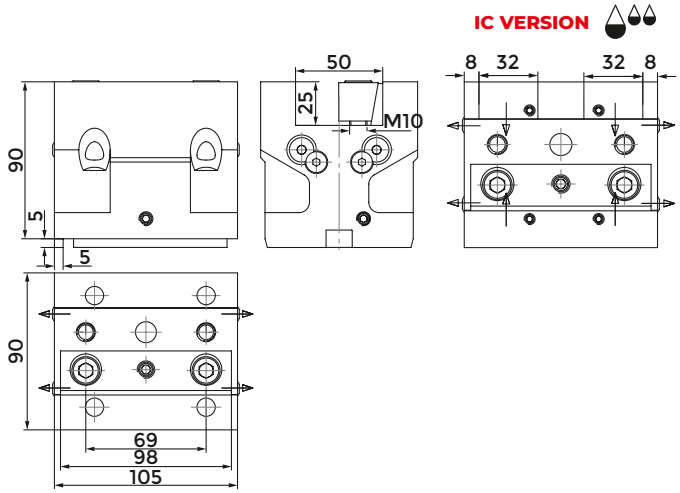

COD.	INTERNAL COOLANT	CLAMPING PLATE	KEY	SCREW FOR KEY	COOLANT BALL	SCREW FOR BALL
128-31512	NO	832-007220	814-203230	811-101016	833-001470	811-108018
128-31512-IC	SI	832-007220	814-203230	811-101016	833-001470	811-108018

CUT-OFF HOLDER

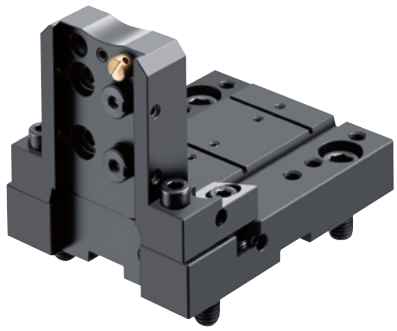

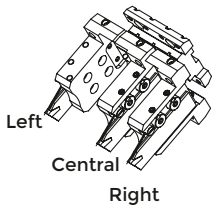

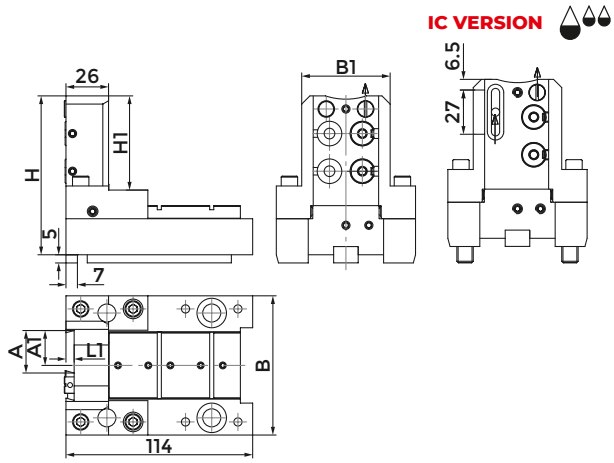

COD.	INTERNAL COOLANT	A	A1	B	B1	H	H1	L1	KEY	SCREW FOR KEY	COOLANT NOZZLE	O RING COOLANT BALL	O RING INTERNAL COOLANT
128-11548	NO	26	21.4	85	54	97	57.5	5	814-203230	811-101015	833-001490	823-101058	-
128-11548-IC	SI	26	21.4	85	54	97	57.5	5	814-203230	811-101015	833-001490	823-101058	823-201140
128-11549	NO	32	25	94	63	105	66	6	814-203230	811-101015	833-001490	823-101058	-
128-11549-IC	SI	32	25	94	63	105	66	6	814-203230	811-101015	833-001490	823-101058	823-201140

COD.	O RING FOR BODY	SHIM PLATE	SCREW FOR PLATE	CLAMPING PIN	SPRING	CLAMPING SCREW	SCREW
128-11548	823-101061	832-014448	811-108037	832-014447	824-300012	811-101028	811-104013
128-11548-IC	823-101061	832-014448	811-108037	832-014447	824-300012	811-101028	811-104013
128-11549	823-101061	832-014448	811-108037	832-014450	824-300012	811-101029	811-104013
128-11549-IC	823-101061	832-014448	811-108037	832-014450	824-300012	811-101029	811-104013

TOOLHOLDER FOR BORING BAR

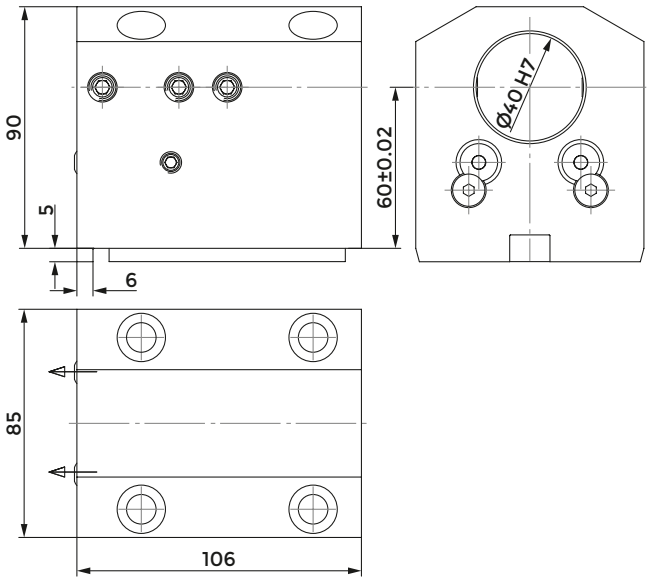

COD.	CLAMPING SCREW	KEY	SCREW FOR KEY	COOLANT BALL	SCREW FOR BALL
			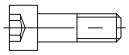		
128-21532	811-102038	814-203230	811-101016	833-001470	811-108018

COMBI TOOLHOLDER WITH INTERNAL COOLANT FOR BORING BAR AND INSERT DRILL

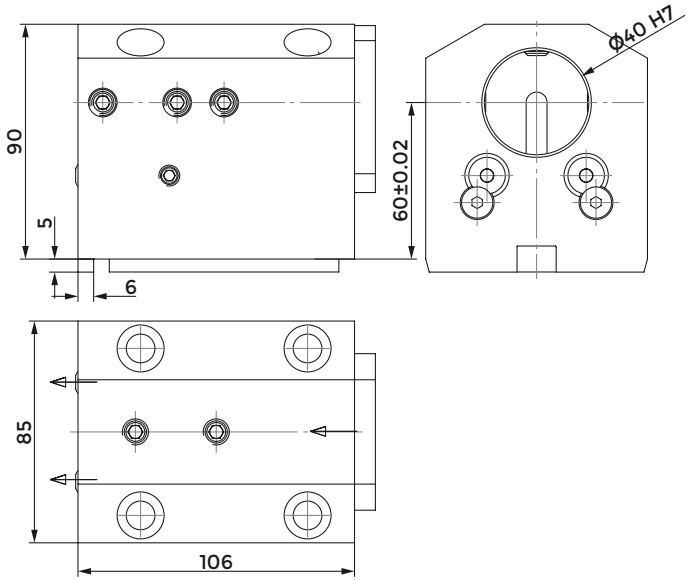

COD.	CLAMPING SCREW 1 (M10X12)	CLAMPING SCREW 2 (M10X10)	KEY	SCREW FOR KEY	COOLANT BALL	SCREW FOR BALL	COVER	SCREW FOR COVER
				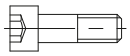				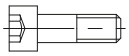
128-21533	811-102038	811-102036	814-203230	811-101016	833-001470	811-108018	832-003363	811-101016

COMBI TOOLHOLDER FOR BORING BAR AND INSERT DRILL

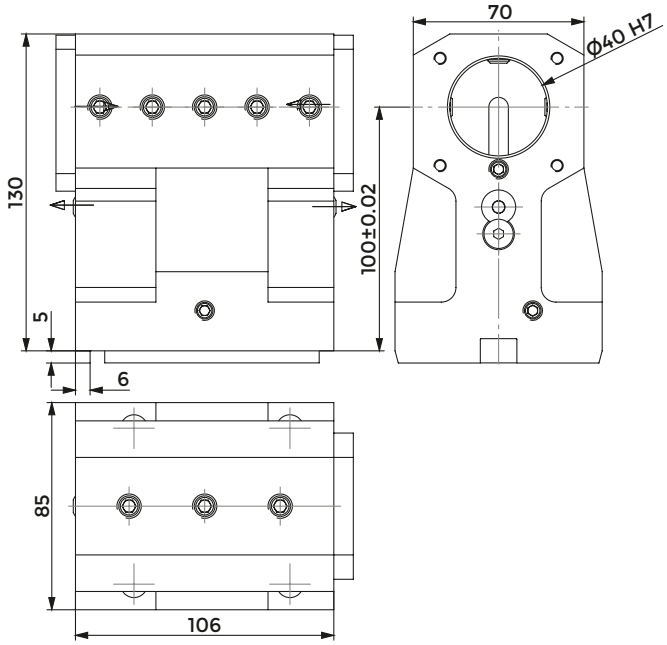

COD.	CLAMPING SCREW 1 (M10X12)	CLAMPING SCREW 2 (M10X10)	KEY	SCREW FOR KEY	COOLANT BALL	SCREW FOR BALL	COVER	SCREW FOR COVER
				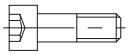				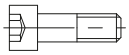
128-21534	811-102037	811-102036	814-203230	811-101016	833-001470	811-108018	832-003363	811-101016

COMBI TOOLHOLDER WITH INTERNAL COOLANT FOR BORING BAR AND INSERT DRILL

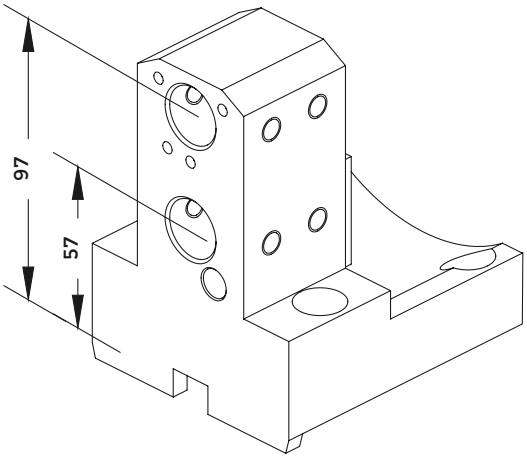

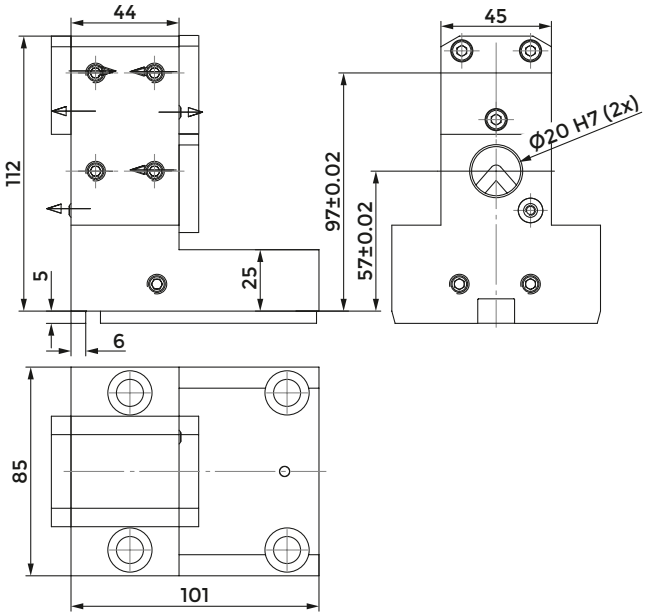

COD.	CLAMPING SCREW	KEY	SCREW FOR KEY	COOLANT BALL	COVER	SCREW FOR COVER
			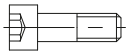			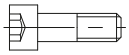
128-21535	811-102028	814-203230	811-101016	833-001070	832-003368	811-101016

COMBI TOOLHOLDER WITH INTERNAL COOLANT FOR BORING BAR AND INSERT DRILL

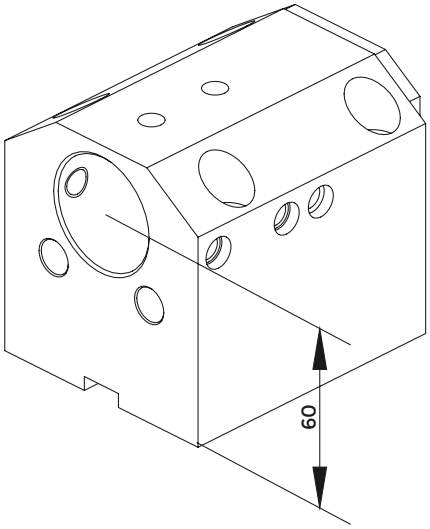

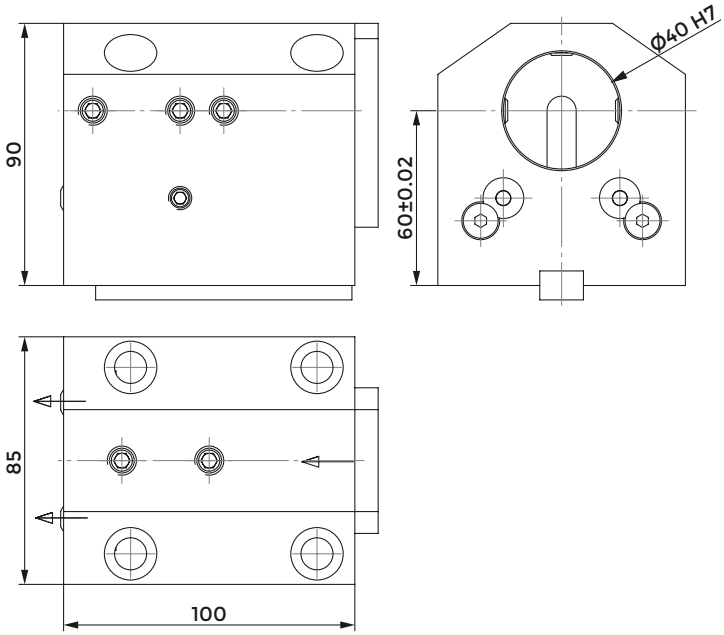

COD.	CLAMPING SCREW 1 (M10X20)	CLAMPING SCREW 2 (M10X10)	KEY	SCREW FOR KEY	COOLANT BALL	SCREW FOR BALL	COVER	SCREW FOR COVER
				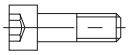				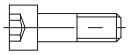
128-21522	811-102038	811-102035	814-203230	811-101017	833-001470	811-108018	832-003216	811-101017

POLYGONAL TOOLHOLDER

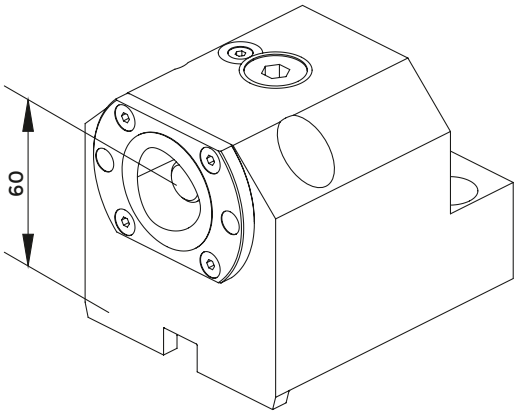

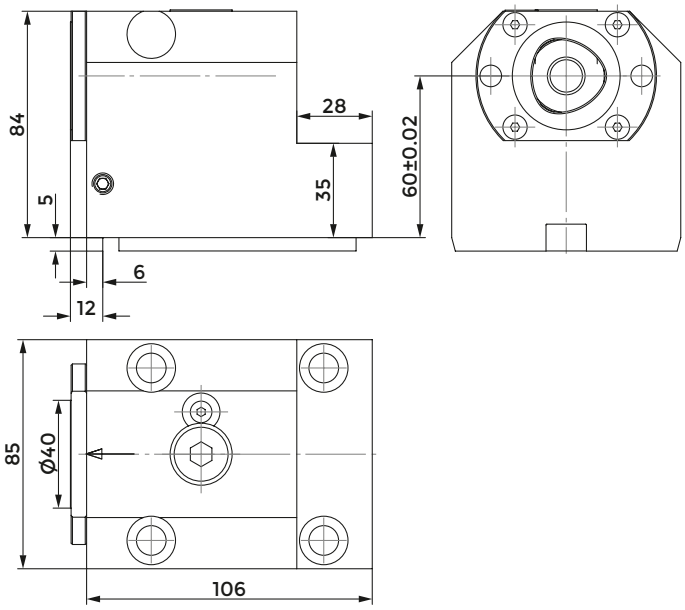

COD.	POLYGONAL	CLAMPING UNIT	KEY	SCREW FOR KEY
				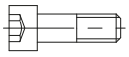
128-11564	C40	CXC40-10	814-203230	811-101016

POLYGONAL TOOLHOLDER

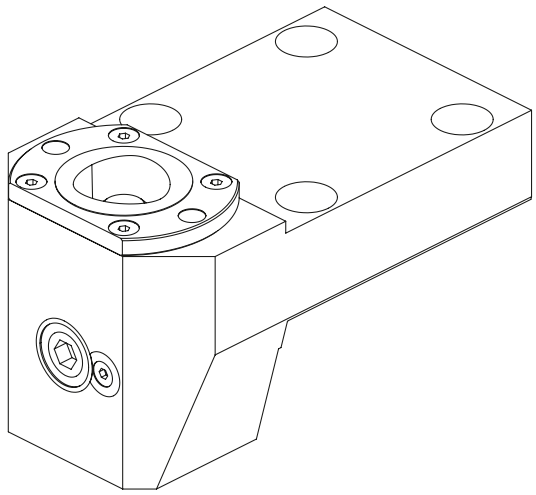

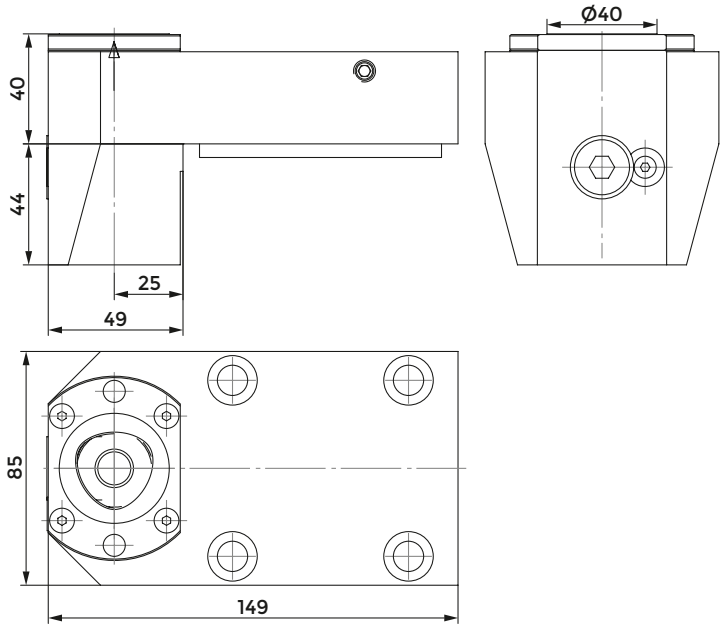

COD.	POLYGONAL	CLAMPING UNIT	KEY	SCREW FOR KEY
				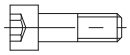
128-11565	C40	CXC40-10	814-203230	811-101016

PROTECTION COVER

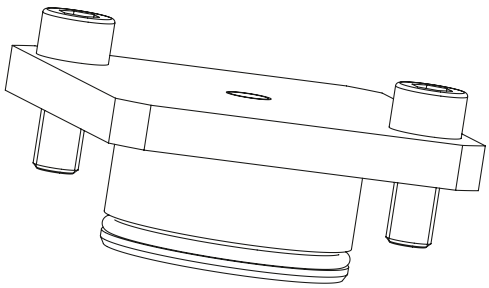

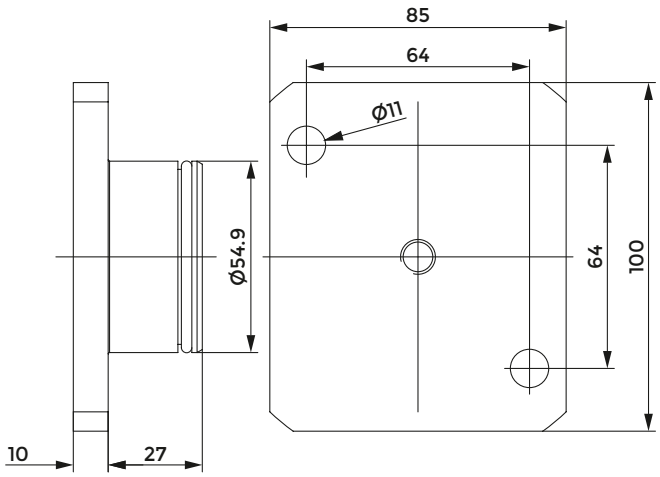

COD.	O RING
137-00253	823-101064

DOOSAN (BMT65) - HWACHEON - HYUNDAI WIA MAXSIN - SMEC/SAMSUNG - TONGTAI - VICTOR - HAAS

Index of machines p. 360

FACE AND O.D. CUTTING HOLDER

128-41801
25x25 mm

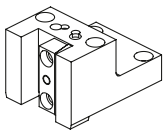

FACE AND O.D. CUTTING HOLDER

128-41802
25x25 mm
128-41802-IC
25x25 mm

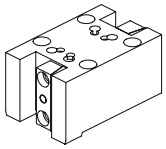

FACE AND O.D. CUTTING HOLDER

128-31802
25x25 mm

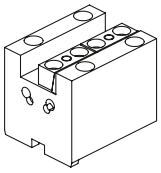

FACE AND O.D. CUTTING HOLDER

128-41804
25x25 mm

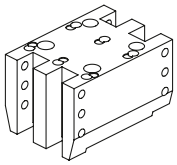

QUALIFIED TOOL

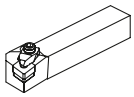

FACE AND O.D. CUTTING HOLDER

128-41801-IC
25x25 mm
(INTERNAL COOLANT)

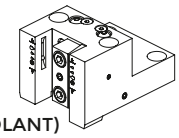

FACE AND O.D. CUTTING HOLDER

128-41803
25x25 mm

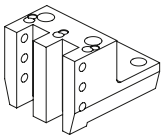

FACE AND O.D. CUTTING HOLDER

128-31802-IC
25x25 mm
(INTERNAL COOLANT)

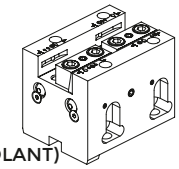

FAST-IN p. 506
DRIVEN TOOLS p. 302

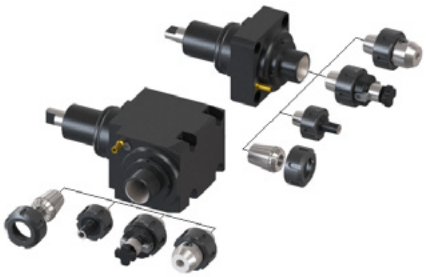

ACCESSORIES

TOOLHOLDER FOR BORING BAR

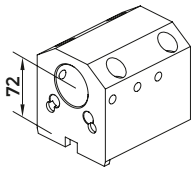

128-21801 - Ø40 mm

COMBI TOOLHOLDER WITH INTERNAL COOLANT FOR BORING BAR AND INSERT DRILL

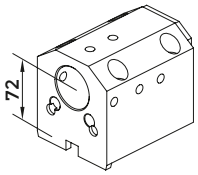

128-21802 - Ø40 mm
128-21805 - Ø50 mm

COMBI TOOLHOLDER WITH INTERNAL COOLANT FOR BORING BAR AND INSERT DRILL

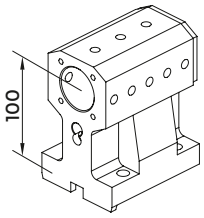

128-21803 - Ø40 mm
128-21806 - Ø50 mm

BORING BAR SLEEVE p. 726

D40

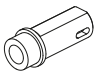

8958 <MT1>
8959 <MT2>
8960 <MT3>

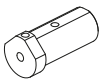

8916 (Ø10 mm)
8917 (Ø12 mm)
8918 (Ø16 mm)

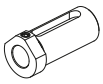

8919 (Ø20 mm)
8920 (Ø25 mm)
8921 (Ø32 mm)

8897 (Ø20 mm)
8898 (Ø25 mm)
8899 (Ø32 mm)

9615 (Ø8 mm)
9616 (Ø10 mm)
9617 (Ø12 mm)

9619 (Ø16 mm)
9621 (Ø20 mm)
9622 (Ø25 mm)
9623 (Ø32 mm)

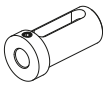

8768 (Ø16 mm)
8770 (Ø20 mm)
8771 (Ø25 mm)
8772 (Ø32 mm)

D50

8773 (Ø25 mm)
8774 (Ø32 mm)
8775 (Ø40 mm)

CUT-OFF HOLDER

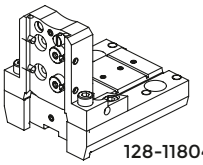

128-11804

CUT-OFF TOOL

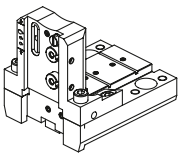

128-11804-IC
(INTERNAL COOLANT)

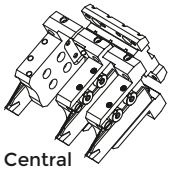

Left
Central
Right

POLYGONAL TOOL HOLDER

128-11819 - C40
128-11809 - C50

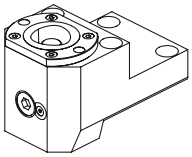

POLYGONAL TOOL HOLDER

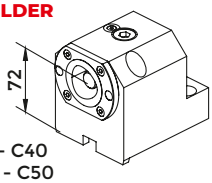

128-11817 - C40
128-11805 - C50

POLYGONAL TOOL HOLDER

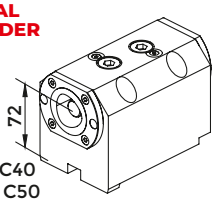

128-11818 - C40
128-11807 - C50

CONTROL PIN p. 758

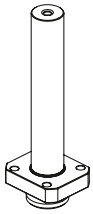

137-00199

PROTECTION COVER

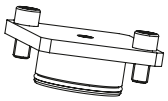

137-00254

CONNECTION

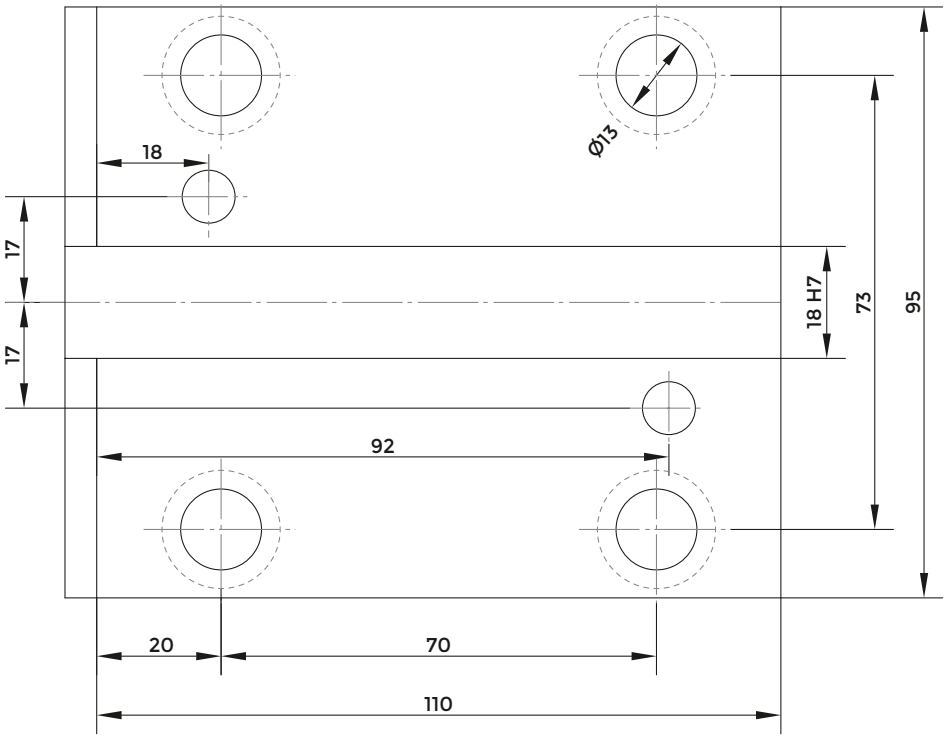

RADIAL TOOLHOLDER

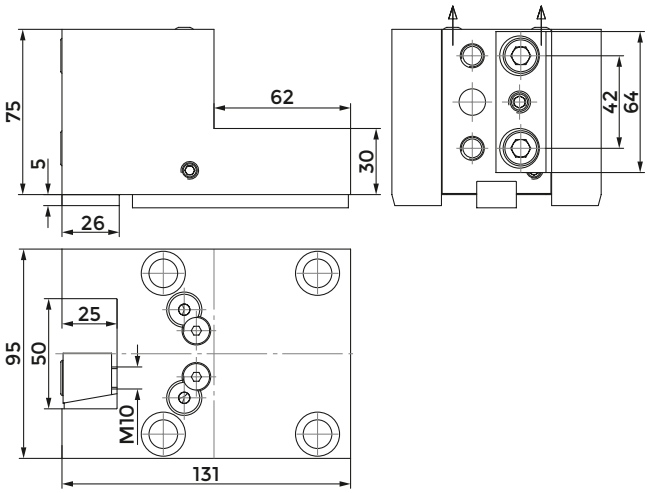

COD.	INTERNAL COOLANT	CLAMPING PLATE	KEY	SCREW FOR KEY	COOLANT BALL	SCREW FOR BALL
			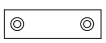	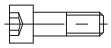		
128-41801	NO	832-007360	814-203310	811-101027	833-001470	811-108018
128-41801-IC	SI	832-007360	814-203310	811-101027	833-001470	811-108018

RADIAL TOOLHOLDER

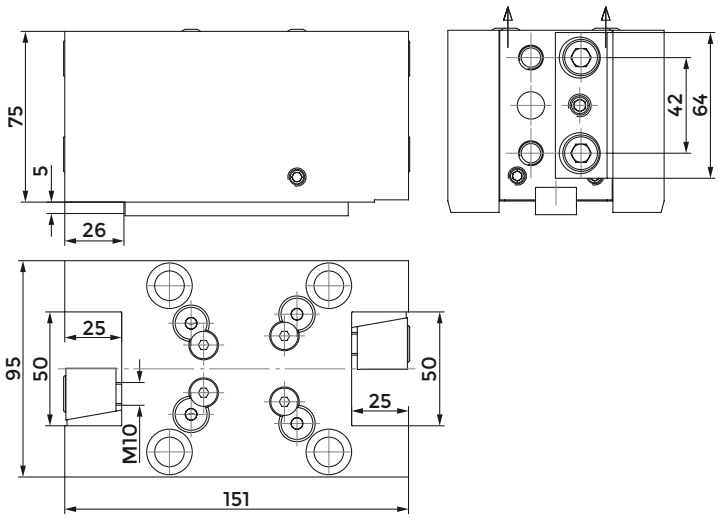

COD.	INTERNAL COOLANT	CLAMPING PLATE	KEY	SCREW FOR KEY	COOLANT BALL	SCREW FOR BALL
				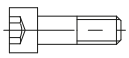		
128-41802	NO	832-007360	814-203310	811-101027	833-001470	811-108018
128-41802-IC	SI	832-007360	814-203310	811-101027	833-001470	811-108018

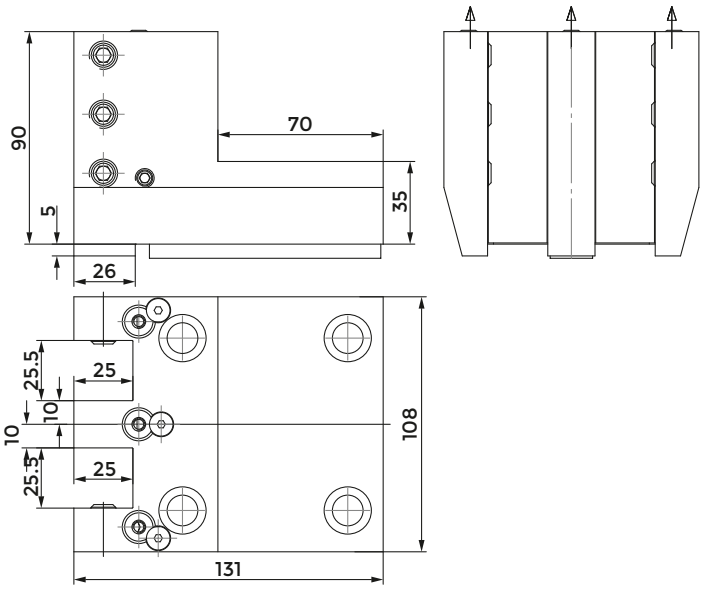

COD.	CLAMPING SCREW	KEY	SCREW FOR KEY	COOLANT BALL	SCREW FOR BALL
	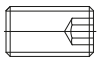		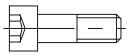		
128-41803	811-102044	814-203310	811-101027	833-001410	811-108024

RADIAL TOOLHOLDER

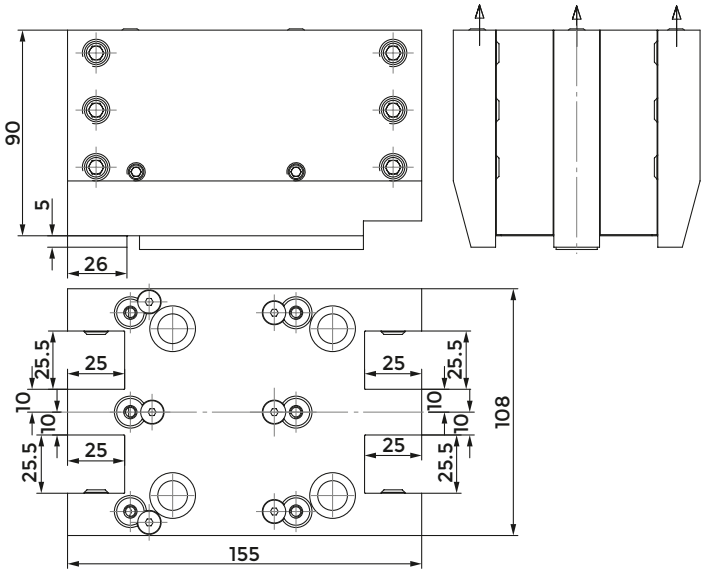

COD.	CLAMPING SCREW	KEY	SCREW FOR KEY	COOLANT BALL	SCREW FOR BALL
			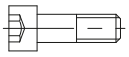		
128-41804	811-102044	814-203310	811-101027	833-001410	811-108024

AXIAL TOOLHOLDER

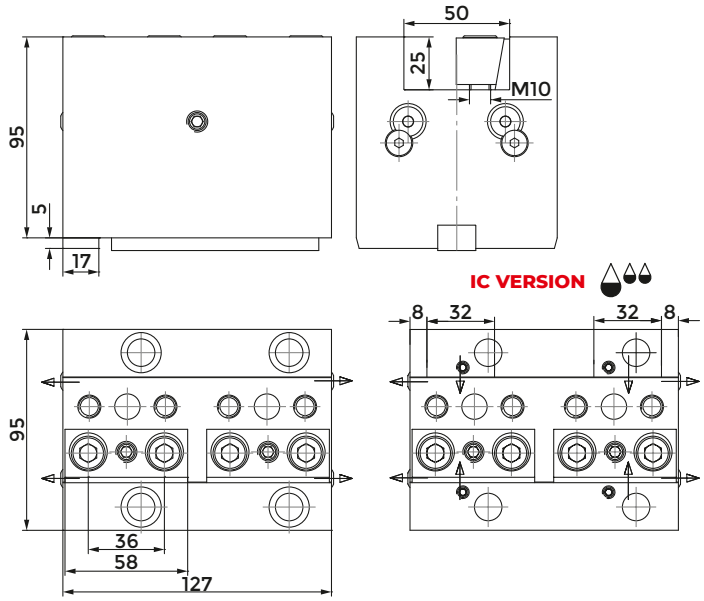

COD.	INTERNAL COOLANT	CLAMPING PLATE	KEY	SCREW FOR KEY	COOLANT BALL	SCREW FOR BALL
				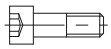		
128-31802	NO	832-007570	814-203310	811-101027	833-001470	811-108018
128-31802-IC	SI	832-007570	814-203310	811-101027	833-001470	811-108018

CUT-OFF HOLDER

IC VERSION

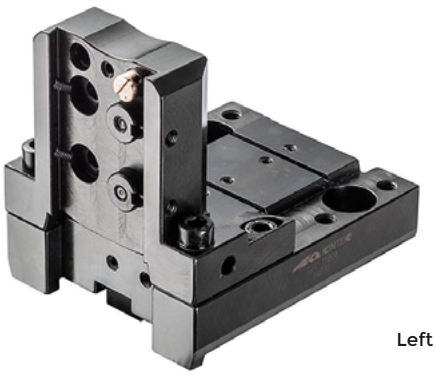

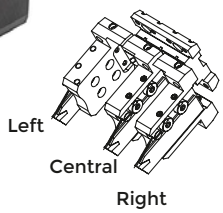

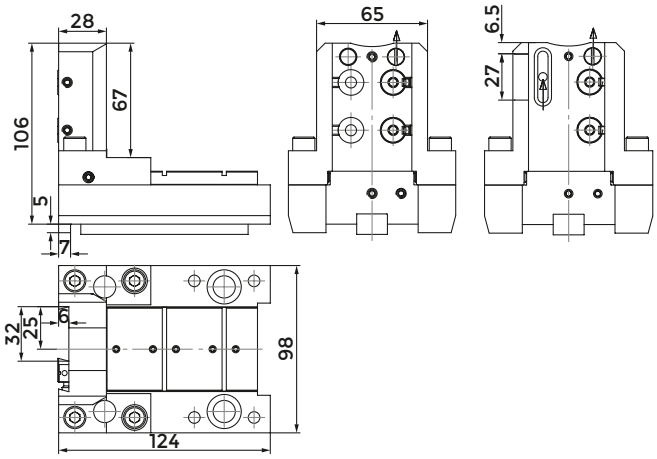

COD.	INTERNAL COOLANT	KEY	SCREW FOR KEY	COOLANT NOZZLE	O RING FOR COOLANT NOZZLE	O RING FOR INTERNAL COOLANT
128-11804	NO	814-203310	811-101026	833-001490	823-101058	-
128-11804-IC	SI	814-203310	811-101026	833-001490	823-101058	823-201140

COD.	O RING FOR BODY	SHIM PLATE	SCREW FOR PLATE	CLAMPING PIN	SPRING	CLAMPING SCREW	SCREW
128-11804	823-101061	832-014449	811-108037	832-014450	824-300012	811-101029	811-104013
128-11804-IC	823-101061	832-014449	811-108037	832-014450	824-300012	811-101029	811-104013

TOOLHOLDER FOR BORING BAR

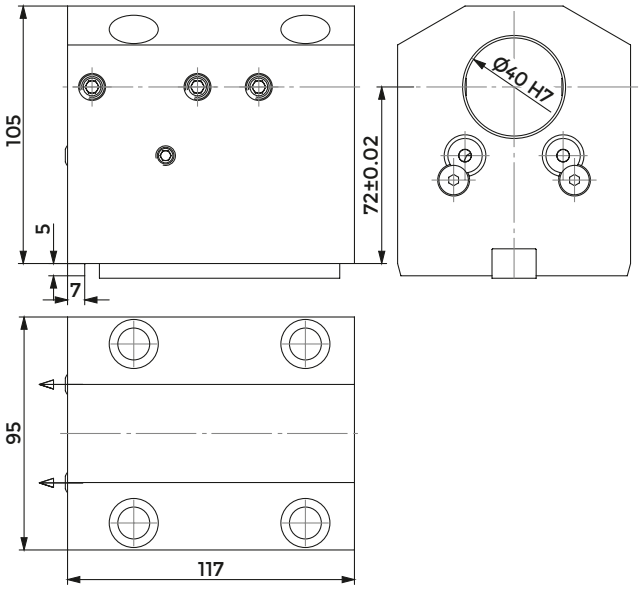

COD.	CLAMPING SCREW	KEY	SCREW FOR KEY	COOLANT BALL	SCREW FOR BALL
128-21801	811-102039	814-203310	811-101027	833-001470	811-108018

COMBI TOOLHOLDER WITH INTERNAL COOLANT FOR BORING BAR AND INSERT DRILL

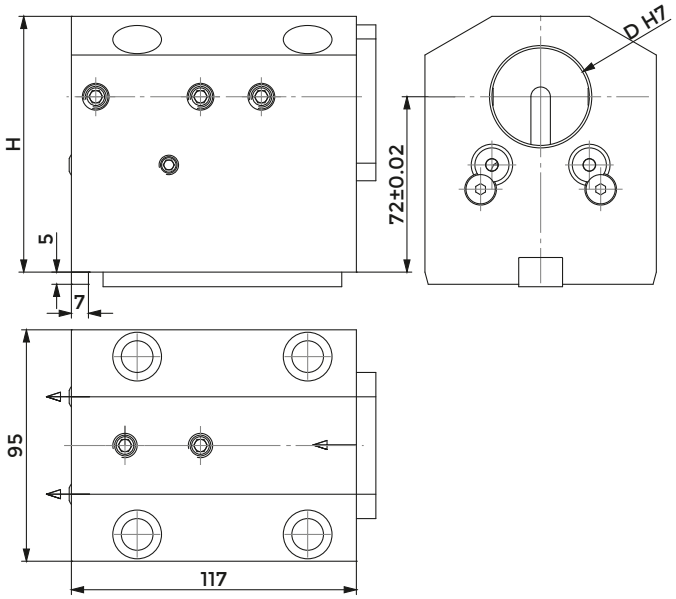

COD.	D	H	CLAMPING SCREW 1 (M10X25D40) (M12X20 D50)	CLAMPING SCREW 2 (M10X12D40) (M12X12 D50)	KEY	SCREW FOR KEY	COOLANT BALL	SCREW FOR BALL	COVER	SCREW FOR COVER
128-21802	40	105	811-102039	811-102036	814-203310	811-101027	833-001470	811-108018	832-003363	811-101016
128-21805	50	109	811-102044	811-102064	814-203310	811-101027	833-001470	811-108018	832-003369	811-101016

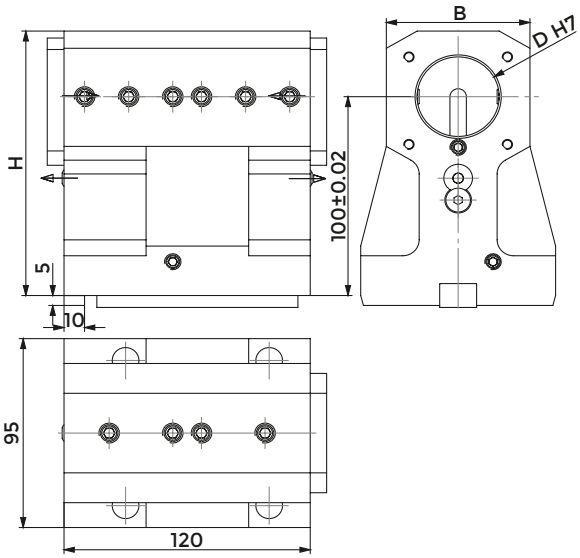

COD.	D	H	B	CLAMPING SCREW 1 (M10X16D40) (M12X16 D50)	CLAMPING SCREW 2 (M10X12D40) (M12X12 D50)	KEY	SCREW FOR KEY	COOLANT BALL	SCREW FOR BALL	COVER	SCREW FOR COVER
128-21803	40	133	70	811-102037	811-102036	814-203310	811-101027	833-001470	811-108018	832-003363	811-101016
128-21806	50	137	80	811-102043	811-102064	814-203310	811-101027	833-001470	811-108018	832-003373	811-101016

POLYGONAL TOOLHOLDER

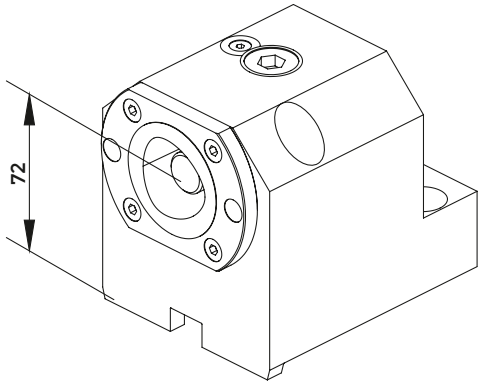

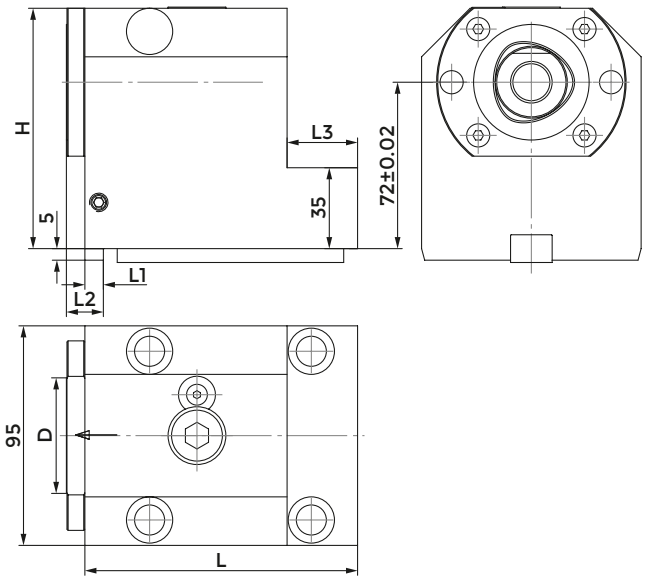

COD.	POLYGONAL	D	H	L	L1	L2	L3	CLAMPING UNIT	KEY	SCREW FOR KEY
									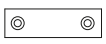	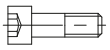
128-11817	C40	40	96	116	6	12	38	CXC40-10	814-203310	811-101027
128-11805	C50	50	104	118	8	16	30,5	CXC50-10	814-203310	811-101027

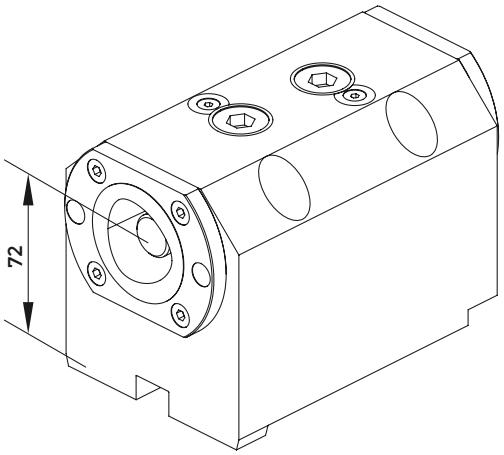

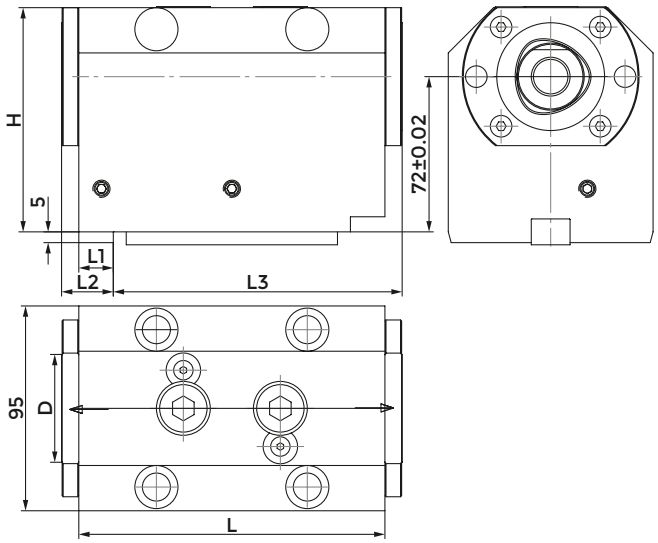

COD.	POLYGONAL	D	H	L	L1	L2	L3	CLAMPING UNIT	KEY	SCREW FOR KEY
										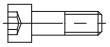
128-11818	C40	40	96	123	13	19	36	CXC40-10	814-203310	811-101027
128-11807	C50	50	104	142	16	24	134	CXC50-10	814-203310	811-101027

POLYGONAL TOOLHOLDER

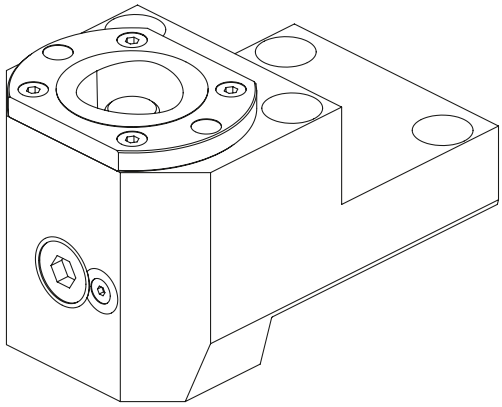

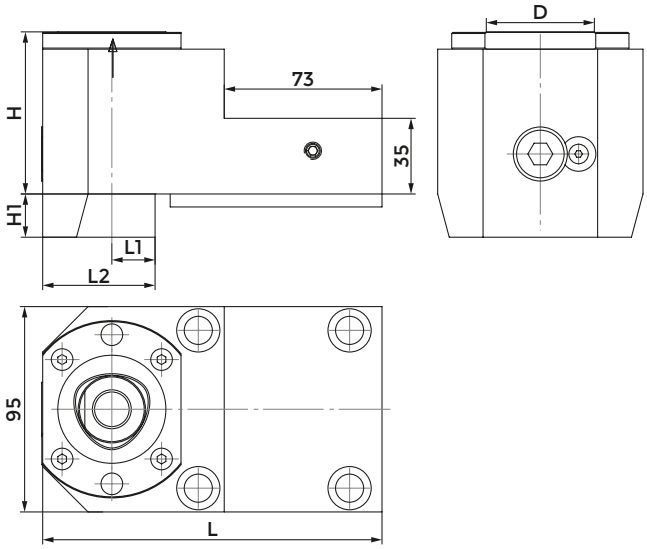

COD.	POLYGONAL	D	H	L	L1	L2	L3	CLAMPING UNIT	KEY	SCREW FOR KEY
128-11819	C40	40	70	13	141	12	36	CXC40-10	814-203310	811-101027
128-11809	C50	50	75	20	157	20	52	CXC50-10	814-203310	811-101027

PROTECTION COVER

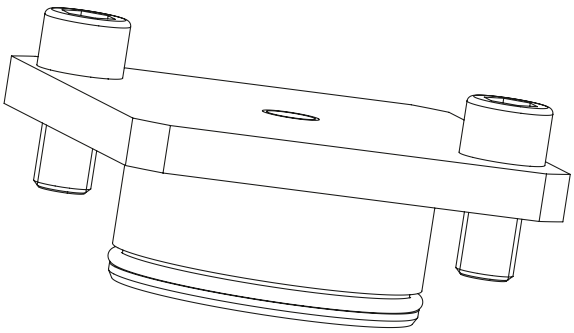

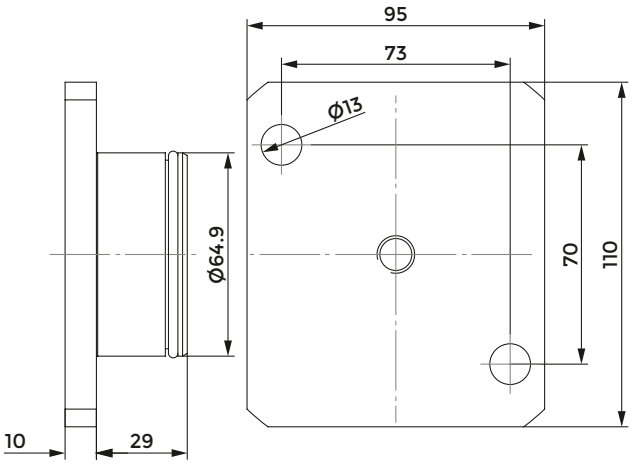

COD.	O RING
137-00254	823-101084

DOOSAN (BMT75) - SAMSUNG HYUNDAI WIA - HWACHEON

Index of machines p. 360

FACE AND O.D. CUTTING HOLDER

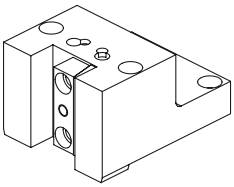

128-42508 - 25x25 mm
128-42508-IC - 25x25 mm
128-42516 - 32x32 mm
128-42516-IC - 32x32 mm

FACE AND O.D. CUTTING HOLDER

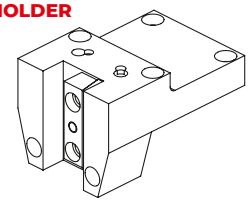

128-42509 - 25x25 mm
128-42509-IC - 25x25 mm
128-42510 - 32x32 mm
128-42510-IC - 32x32 mm

QUALIFIED TOOL

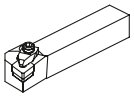

FACE AND O.D. CUTTING HOLDER

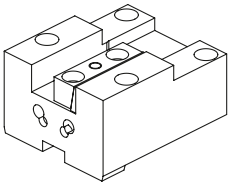

128-32506 - 25x25 mm

FAST-IN DRIVEN TOOLS

FAST-IN p. 506
DRIVEN TOOLS p. 302

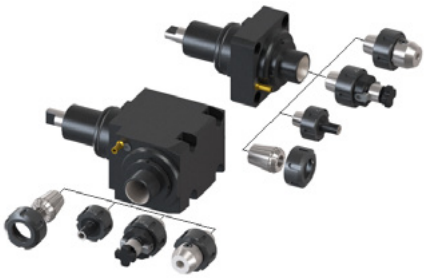

CUT-OFF HOLDER

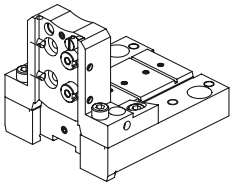

128-12507

CUT-OFF TOOL

32 mm

ACCESSORIES

TOOLHOLDER FOR BORING BAR

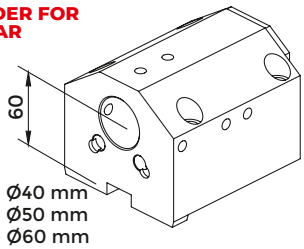

128-22522 - Ø40 mm
128-22523 - Ø50 mm
128-22539 - Ø60 mm

POLYGONAL TOOL HOLDER

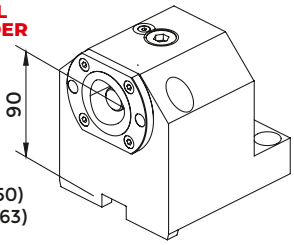

128-12515 (C50)
128-12528 (C63)

POLYGONAL TOOL HOLDER

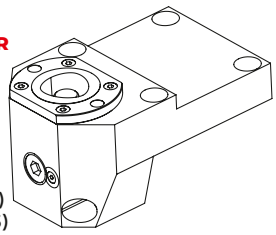

128-12517 (C50)
128-12529 (C63)

BORING BAR SLEEVE

p. 726

D40

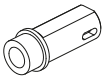

8958 <MT1>
8959 <MT2>
8960 <MT3>

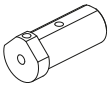

8916 (Ø10 mm)
8917 (Ø12 mm)
8918 (Ø16 mm)

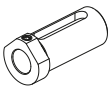

8919 (Ø20 mm)
8920 (Ø25 mm)
8921 (Ø32 mm)

8897 (Ø20 mm)
8898 (Ø25 mm)
8899 (Ø32 mm)

9615 (Ø8 mm)
9616 (Ø10 mm)
9617 (Ø12 mm)

9619 (Ø16 mm)
9621 (Ø20 mm)
9622 (Ø25 mm)
9623 (Ø32 mm)

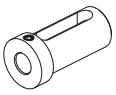

8768 (Ø16 mm)
8770 (Ø20 mm)
8771 (Ø25 mm)
8772 (Ø32 mm)

D50

8773 (Ø25 mm)
8774 (Ø32 mm)
8775 (Ø40 mm)

D60

8881 (Ø25 mm)
8882 (Ø32 mm)
8883 (Ø40 mm)
8884 (Ø50 mm)

CONTROL PIN

p. 758

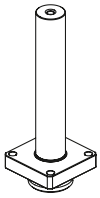

137-00200

PROTECTION COVER

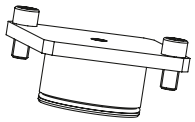

137-00255

CONNECTION

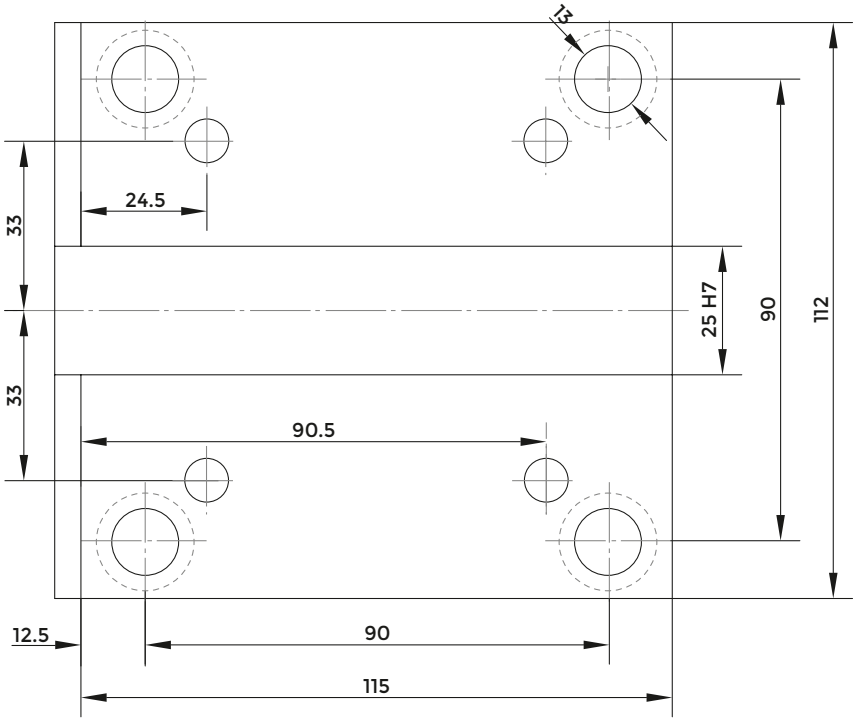

RADIAL TOOLHOLDER

IC VERSION

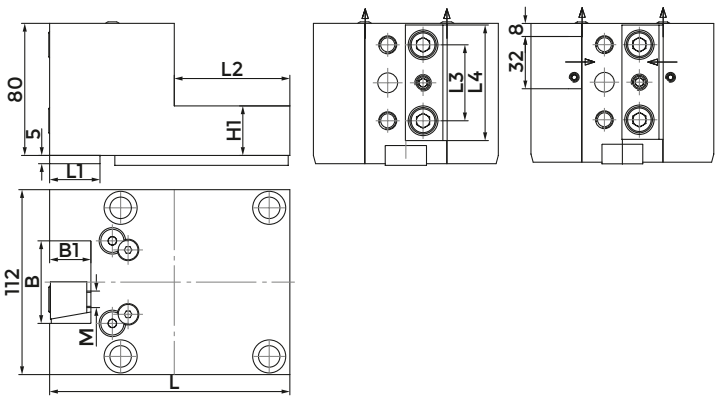

COD.	INTERNAL COOLANT	B	B1	H1	L	L1	L2	L3	L4	M	CLAMPING PLATE	KEY	SCREW FOR KEY	COOLANT BALL	SCREW FOR BALL
128-42508	NO	50	25	30	145.5	30.5	70	46	70	M10	832-007010	814-203480	811-101027	833-001470	811-108018
128-42508-IC	SÌ	50	25	30	145.5	30.5	70	46	70	M10	832-007010	814-203480	811-101027	833-001470	811-108018
128-42516	NO	64	32	45	152.5	35	80	52	76	M12	832-007970	814-203480	811-101027	833-001470	811-108018
128-42516-IC	SÌ	64	32	45	152.5	35	80	52	76	M12	832-007970	814-203480	811-101027	833-001470	811-108018

RADIAL TOOLHOLDER

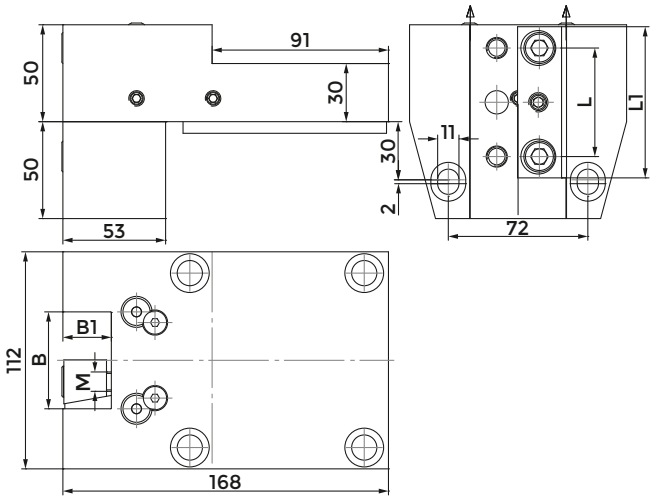

COD.	INTERNAL COOLANT	B	B1	L	L1	M	CLAMPING PLATE	KEY	SCREW FOR KEY	COOLANT BALL	SCREW FOR BALL
128-42509	NO	50	25	56	78	M10	832-007340	814-203480	811-101027	833-001470	811-108018
128-42509-IC	SI	50	25	56	78	M10	832-007340	814-203480	811-101027	833-001470	811-108018
128-42510	NO	64	32	60	88	M12	832-007170	814-203480	811-101027	833-001470	811-108018
128-42510-IC	SI	64	32	60	88	M12	832-007170	814-203480	811-101027	833-001470	811-108018

AXIAL TOOLHOLDER

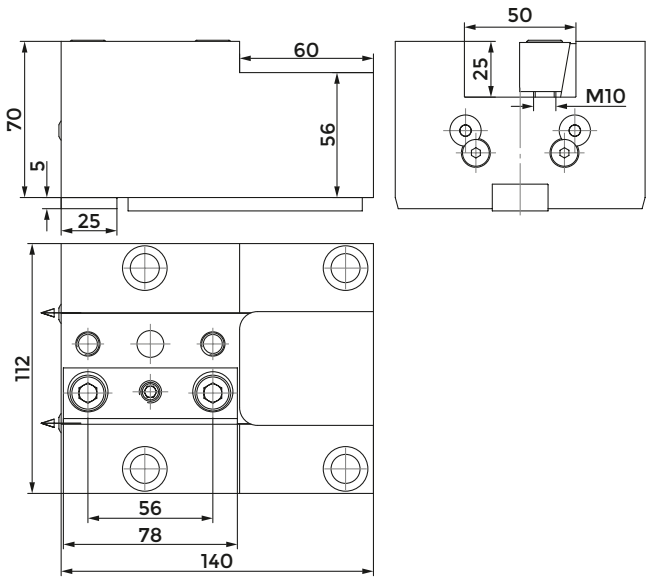

COD.	INTERNAL COOLANT	CLAMPING PLATE	KEY	SCREW FOR KEY	COOLANT BALL	SCREW FOR BALL
128-32506	NO	832-007340	814-203480	811-101027	833-001470	811-108018

CUT-OFF HOLDER

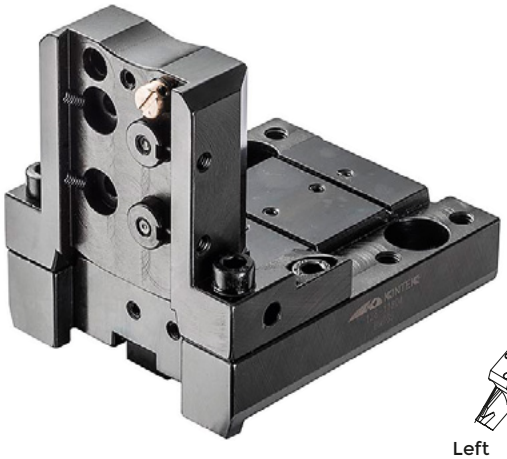

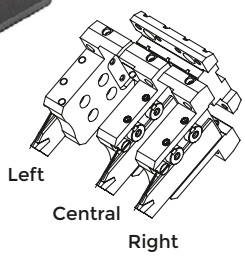

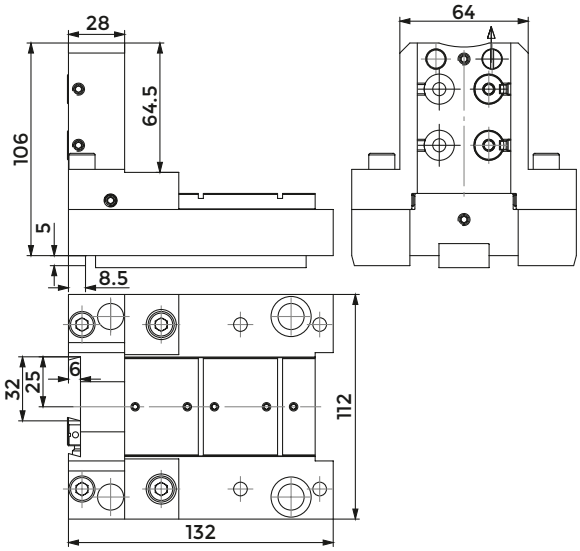

COD.	INTERNAL COOLANT	KEY	SCREW FOR KEY	COOLANT NOZZLE	O RING FOR COOLANT NOZZLE	O RING FOR INTERNAL COOLANT
128-12507	NO	814-203480	811-101026	833-001490	823-101058	-

COD.	O RING FOR BODY	SHIM PLATE	SCREW FOR PLATE	CLAMPING PIN	SPRING	CLAMPING SCREW	SCREW
128-12507	823-101061	832-014449	811-108037	832-014450	824-300012	811-101029	811-104013

COMBI TOOLHOLDER WITH INTERNAL COOLANT FOR BORING BAR AND INSERT DRILL

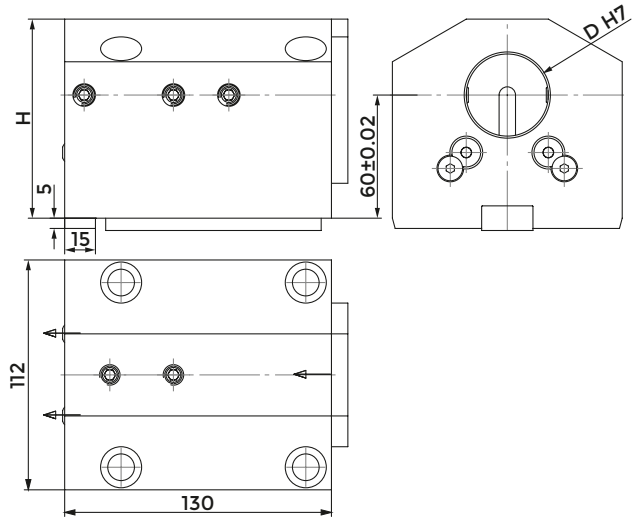

COD.	D	H	CLAMPING SCREW 1 (D40-M10x30) (D50-M12x30) (D60-M12x25)	CLAMPING SCREW 2 (D40-M10x16) (D50-M12x12)	KEY	SCREW FOR KEY	COOLANT BALL	SCREW FOR BALL	COVER	SCREW FOR COVER
128-22522	40	97	811-102040	811-102037	814-203480	811-101027	833-001470	811-108018	832-003369	811-101016
128-22523	50	97	811-102046	811-102064	814-203480	811-101027	833-001470	811-108018	832-003369	811-101016
128-22539	60	102	811-102045	811-102064	814-203480	811-101027	833-001470	811-108018	832-003385	811-101016

POLYGONAL TOOLHOLDER

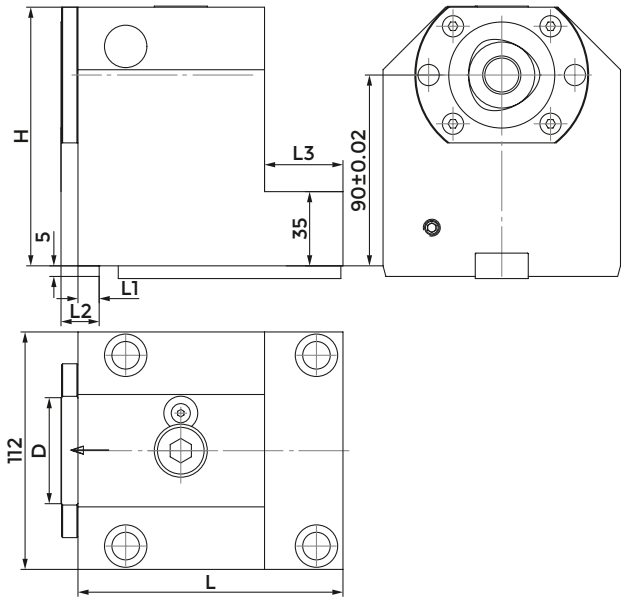

COD.	POLYGONAL	D	H	L	L1	L2	L3	CLAMPING UNIT	KEY	SCREW FOR KEY
128-12528	C63	63	102	127	12	21	-	CXC63-10	814-203480	811-101027
128-12515	C50	50	92	125	10	18	37	CXC50-10	814-203480	811-101027

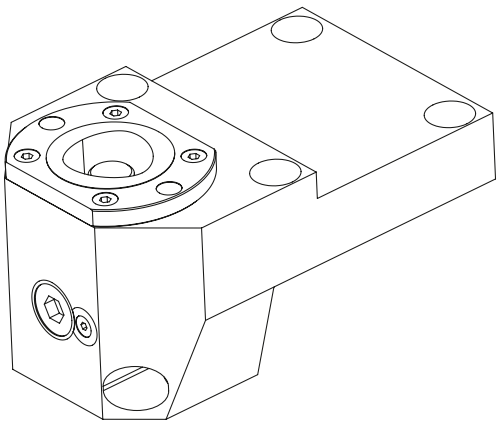

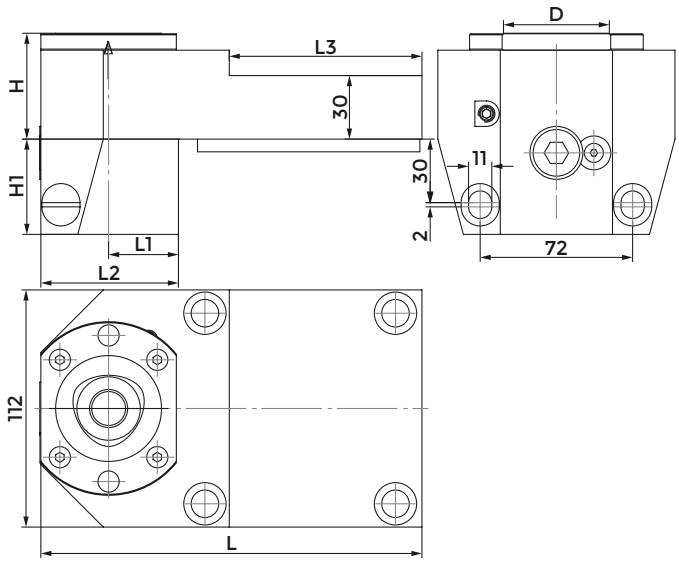

COD.	POLYGONAL	D	H	H1	L	L1	L2	L3	CLAMPING UNIT	KEY	SCREW FOR KEY
128-12517	C50	50	50	45	180	33	65	91	CXC50-10	814-203480	811-101027
128-12529	C63	63	45	57	204	47	89	120	CXC63-10	814-203480	811-101027

PROTECTION COVER

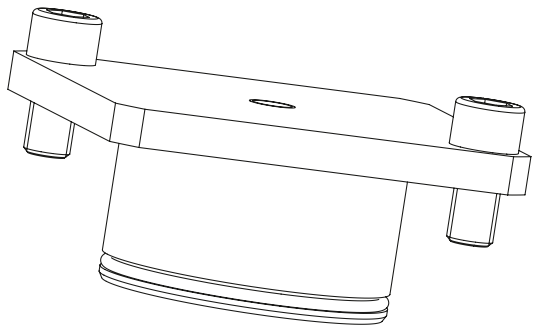

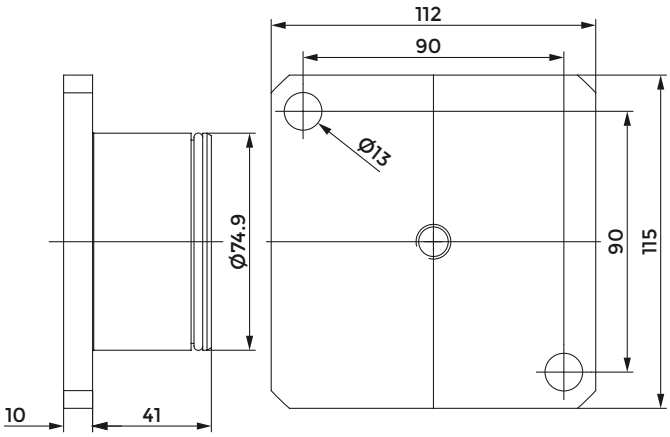

COD.	O RING
137-00255	823-101115

DOOSAN PUMA (BMT85)

Index of machines p. 360

FACE AND O.D. CUTTING HOLDER

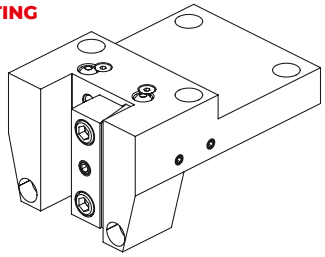

128-42513 - 32x32 mm
128-42513-IC - 32x32 mm

FACE AND O.D. CUTTING HOLDER

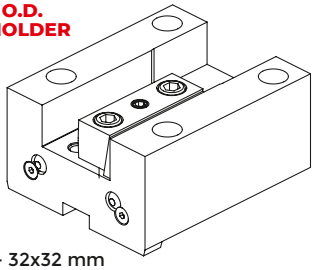

128-32509 - 32x32 mm
128-32509-IC - 32x32 mm

QUALIFIED TOOL

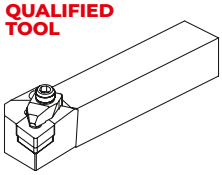

CUT-OFF HOLDER

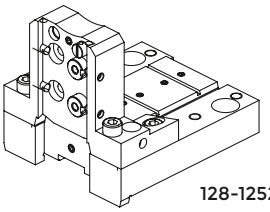

CUT-OFF TOOL

128-12521 - 32 mm

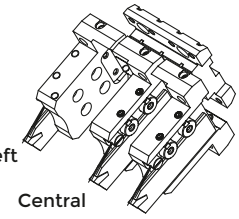

ACCESSORIES

COMBI TOOLHOLDER WITH INTERNAL COOLANT FOR BORING BAR AND INSERT DRILL

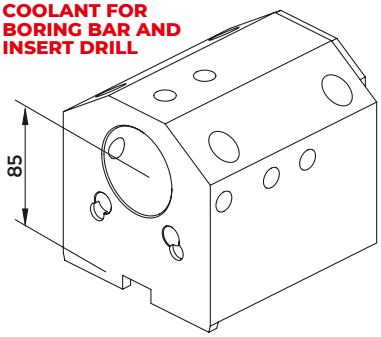

128-22528 - (Ø50 mm)
128-22529 - (Ø60 mm)

BORING BAR SLEEVE

p. 724

	D50	D60
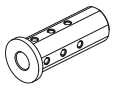	5328 (Ø12 mm) 5329 (Ø16 mm) 5330 (Ø20 mm) 5331 (Ø25 mm) 5332 (Ø32 mm)	8840 (Ø20 mm) 8941 (Ø25 mm) 8942 (Ø32 mm) 8943 (Ø40 mm)
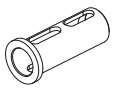	5335 (Ø40 mm)	8844 (Ø50 mm)
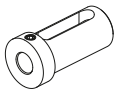	8773 (Ø25 mm) 8774 (Ø32 mm) 8775 (Ø40 mm)	8881 (Ø25 mm) 8882 (Ø32 mm) 8883 (Ø40 mm) 8884 (Ø50 mm)

PROTECTION COVER

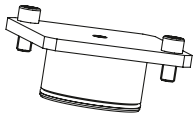

137-00256

POLYGONAL TOOL HOLDER

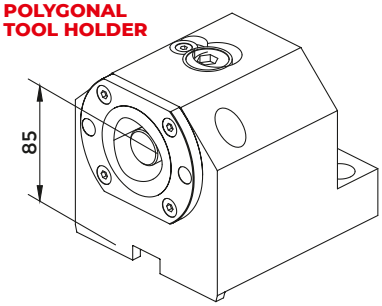

128-12519 C63

POLYGONAL TOOL HOLDER

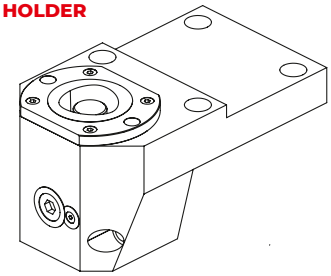

128-12520 C63

CONNECTION

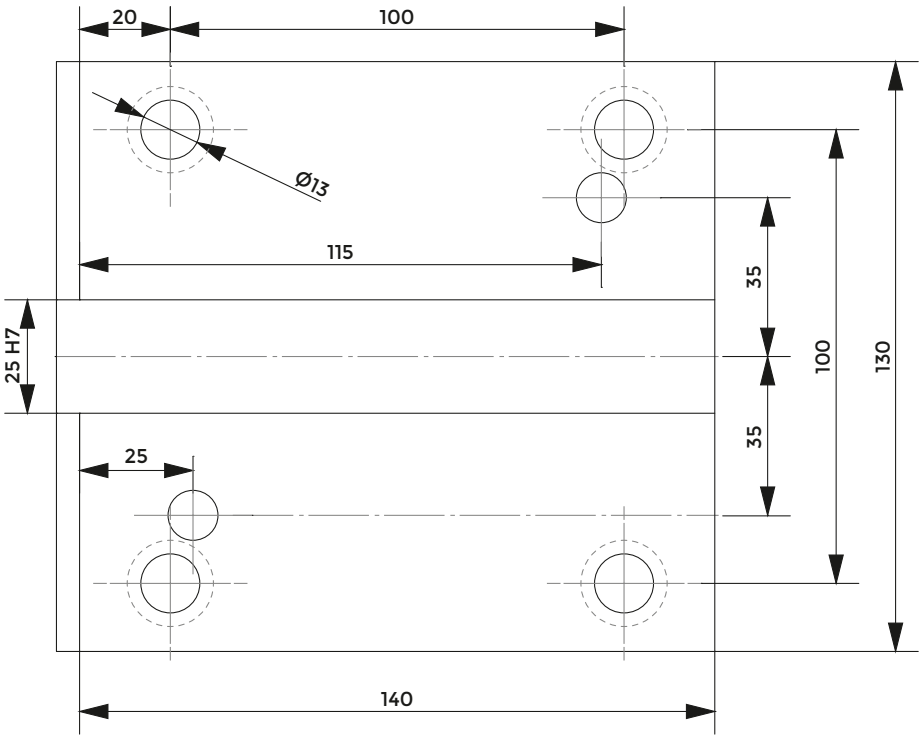

RADIAL TOOLHOLDER

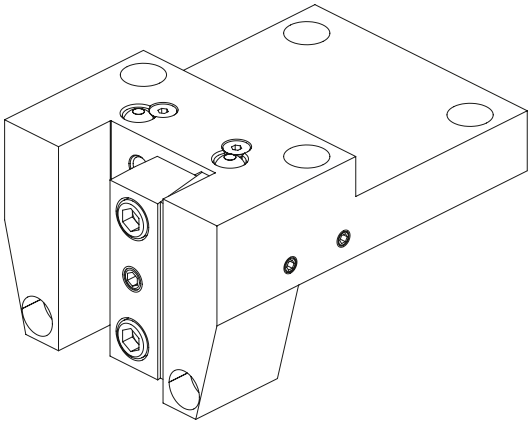

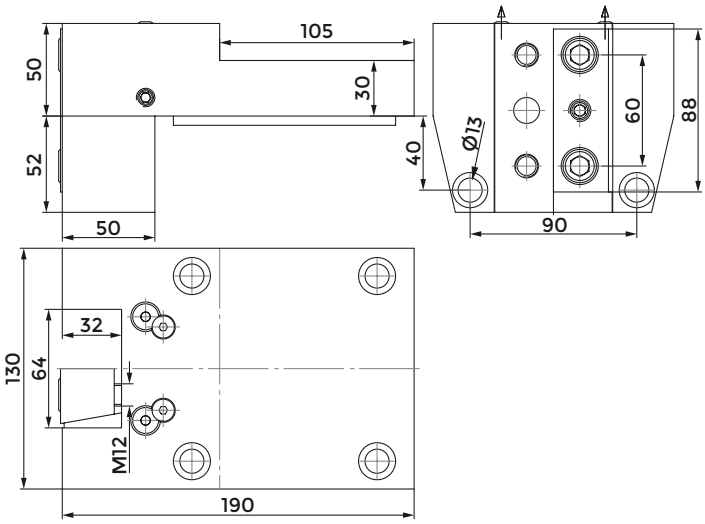

COD.	INTERNAL COOLANT	CLAMPING PLATE	KEY	SCREW FOR KEY	COOLANT BALL	SCREW FOR BALL
				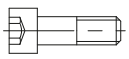		
128-42513	NO	832-007170	814-203350	811-101027	833-001470	811-108018
128-42513-IC	SI	832-007170	814-203350	811-101027	833-001470	811-108018

AXIAL TOOLHOLDER

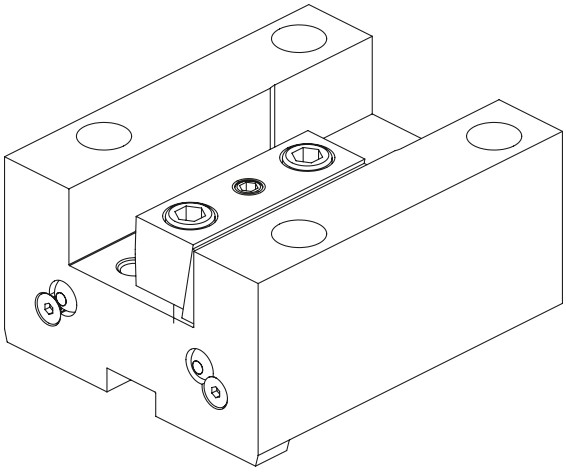

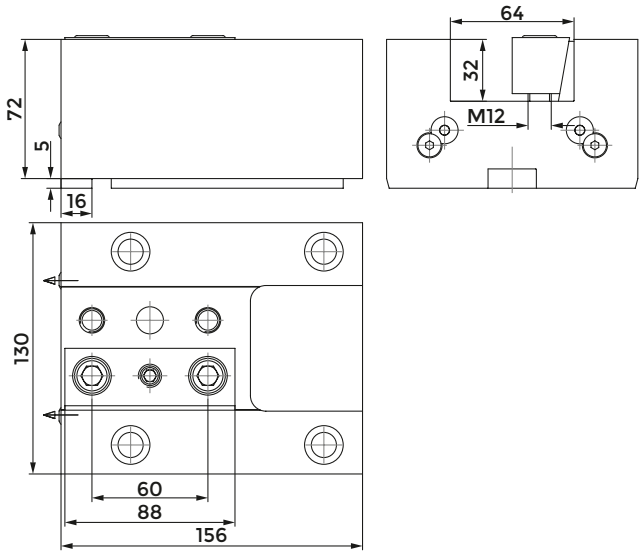

COD.	INTERNAL COOLANT	CLAMPING PLATE	KEY	SCREW FOR KEY	COOLANT BALL	SCREW FOR BALL
128-32509	NO	832-007170	814-203350	811-101027	833-001470	811-108018
128-32509-IC	SI	832-007170	814-203350	811-101027	833-001470	811-108018

CUT-OFF HOLDER

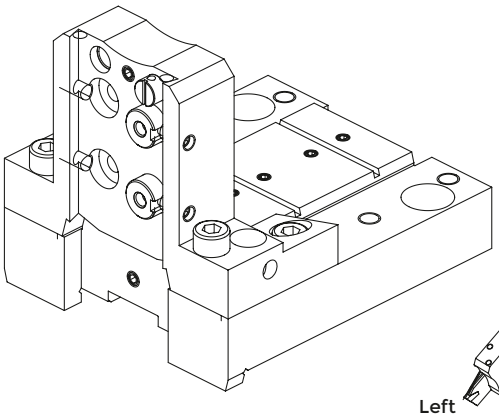

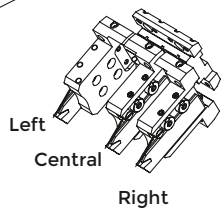

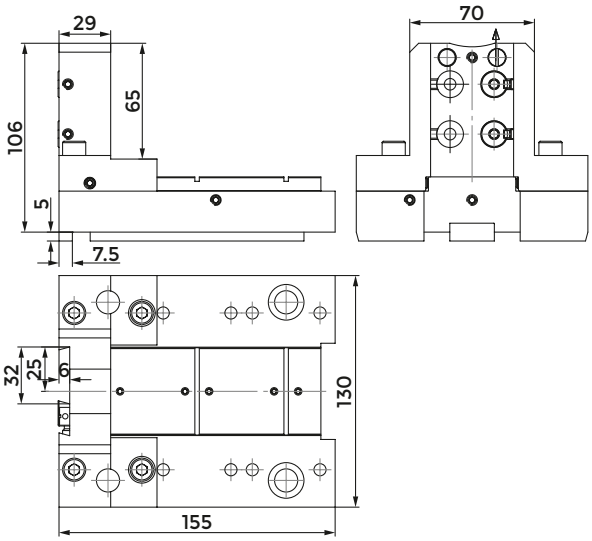

COD.	KEY	SCREW FOR KEY	COOLANT NOZZLE	O RING FOR COOLANT NOZZLE	O RING FOR BODY
128-12521	814-203350	811-101026	833-001490	823-101058	823-101061

COD.	SHIM PLATE	SCREW FOR PLATE	CLAMPING PIN	SPRING	CLAMPING SCREW	SCREW
128-12521	832-014449	811-108037	832-014450	824-300012	811-101029	811-104013

COMBI TOOLHOLDER WITH INTERNAL COOLANT FOR BORING BAR AND INSERT DRILL

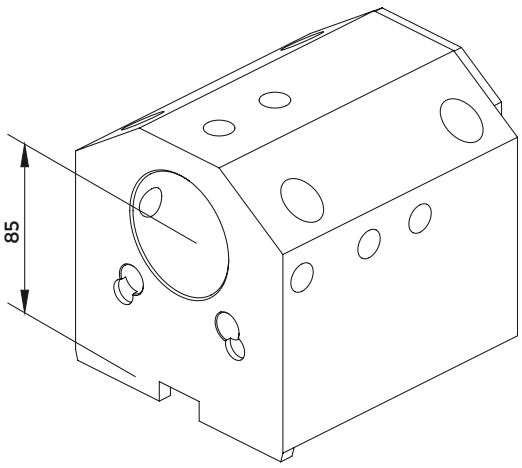

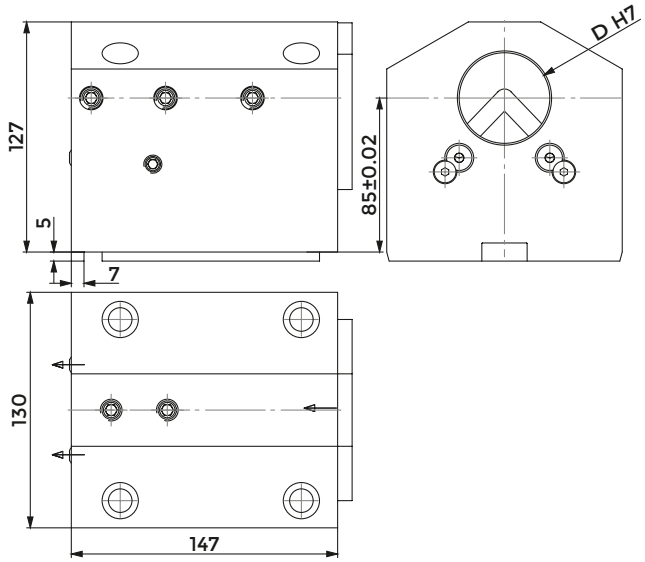

COD.	D	CLAMPING SCREW 1 (M12X35)	CLAMPING SCREW 2 (D50-M12x16) (D60-M12x12)	KEY	SCREW FOR KEY	COOLANT BALL	SCREW FOR BALL	COVER	SCREW FOR COVER
					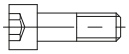				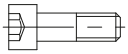
128-22528	50	811-102047	811-102043	814-203350	811-101027	833-001470	811-108018	832-003389	811-101016
128-22529	60	811-102047	811-102064	814-203350	811-101027	833-001470	811-108018	832-003389	811-101016

POLYGONAL TOOLHOLDER

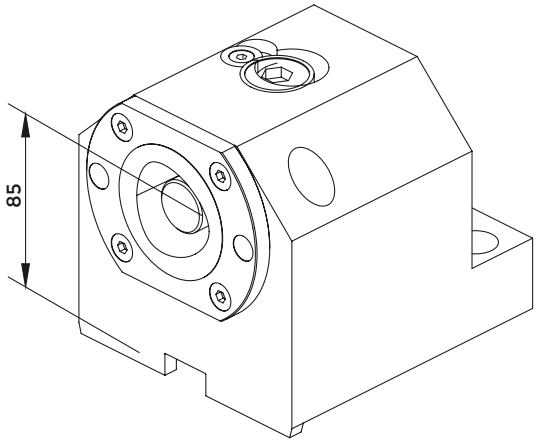

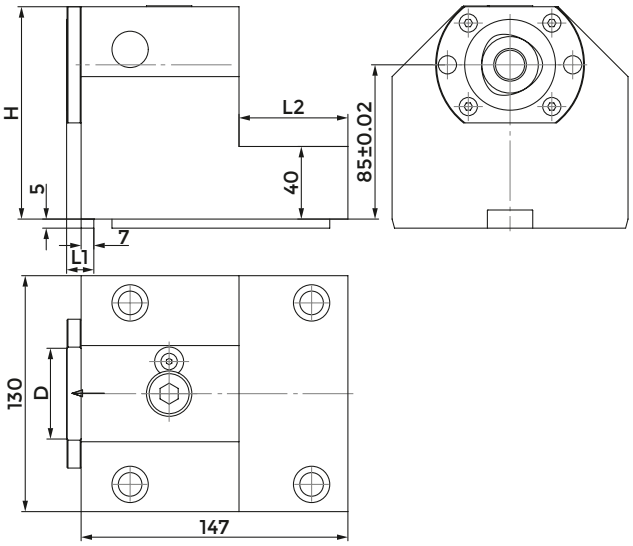

COD.	POLYGONAL	D	H	L1	L2	CLAMPING UNIT	KEY	SCREW FOR KEY
							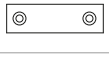	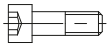
128-12519	C63	63	127	16	39	CXC63-10	814-203350	811-101027

POLYGONAL TOOLHOLDER

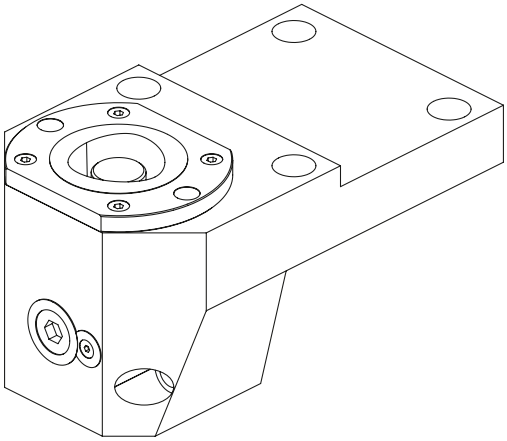

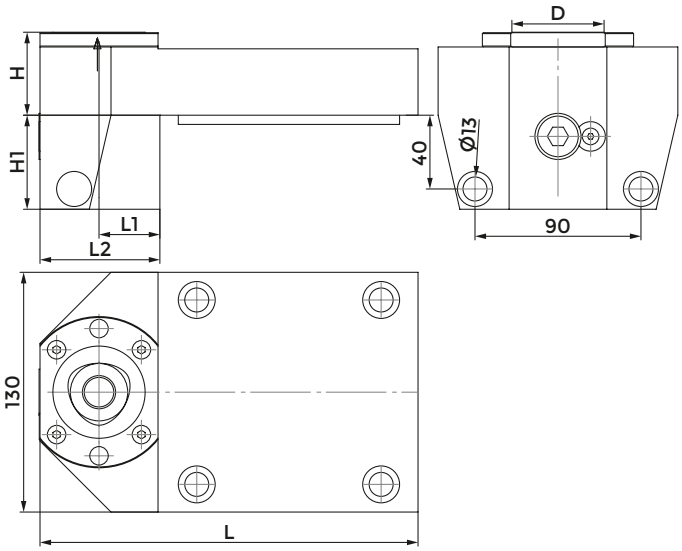

COD.	POLYGONAL	D	H	H1	L	L1	L2	CLAMPING UNIT	KEY	SCREW FOR KEY
										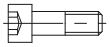
128-12520	C63	63	50	67	225	43	85	CXC63-10	814-203350	811-101027

PROTECTION COVER

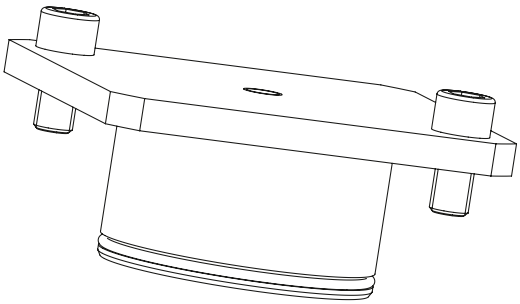

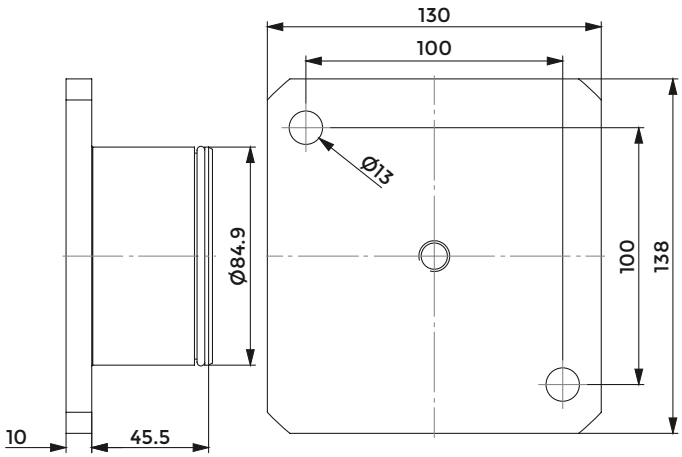

COD.	O RING
137-00256	823-101116

MAZAK NEXUS

Index of machines p. 361

FACE AND O.D. CUTTING HOLDER

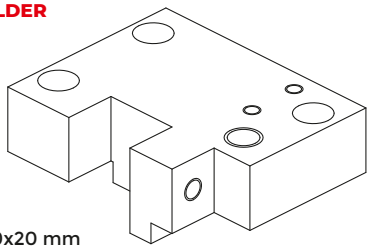

123-33801 - 20x20 mm

QUALIFIED TOOL

ACCESSORIES

BORING BAR SLEEVE

p. 726

TOOLHOLDER FOR BORING BAR

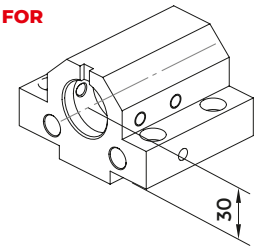

121-23801
Ø32 mm

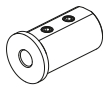

9607 (Ø8 mm)
9608 (Ø10 mm)
9609 (Ø12 mm)

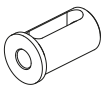

9611 (Ø16 mm)
9613 (Ø20 mm)
9614 (Ø25 mm)

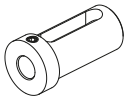

8764 (Ø16 mm)
8766 (Ø20 mm)
8767 (Ø25 mm)

COMBI TOOLHOLDER WITH INTERNAL COOLANT FOR BORING BAR AND INSERT DRILL

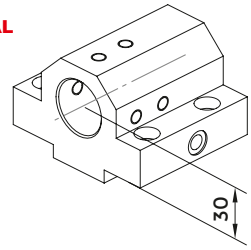

121-23802
Ø32 mm

CONNECTION

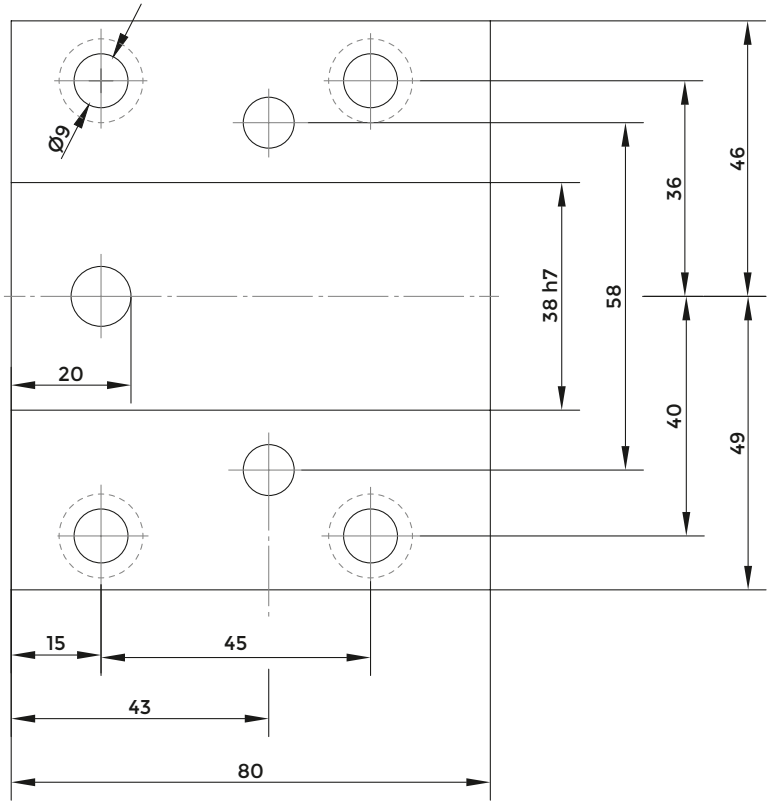

RADIAL TOOLHOLDER

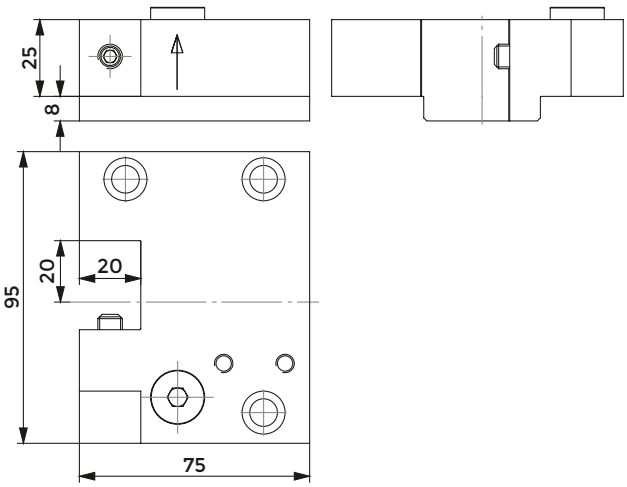

COD.	CLAMPING SCREW	SCREW
123-33801	811-102031	811-302110

TOOLHOLDER FOR BORING BAR

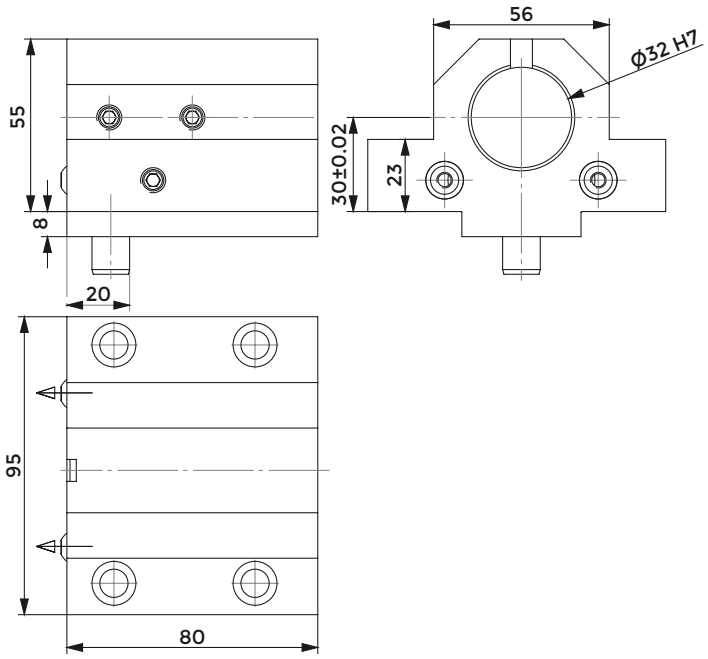

COD.	CLAMPING SCREW	PIN	COOLANT NOZZLE
121-23801	811-102028	815-210610	833-001080

TOOLHOLDER FOR INSERT DRILL WITH INTERNAL COOLANT

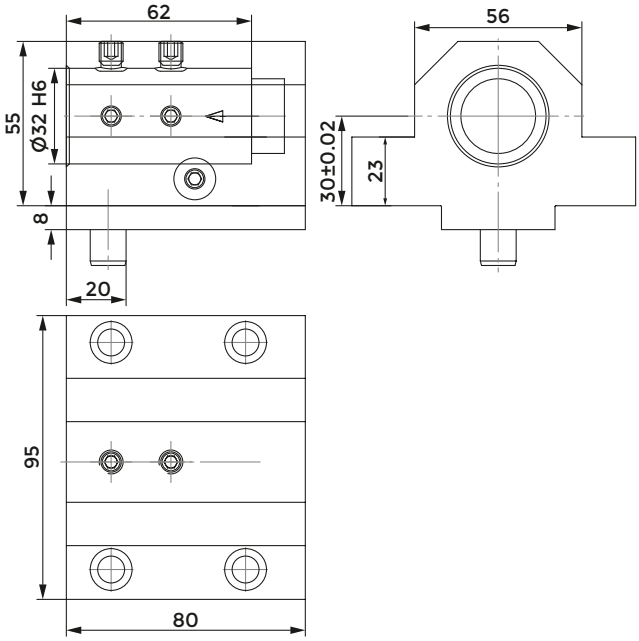

COD.	CLAMPING SCREW 1 (M8X12)	CLAMPING SCREW 2 (M8X8)	PIN
121-23802	811-102028	811-102026	815-210610

MAZAK NEXUS

Index of machines p. 361

FAST-IN p. 506
DRIVEN TOOLS p. 302

FACE AND O.D. CUTTING HOLDER

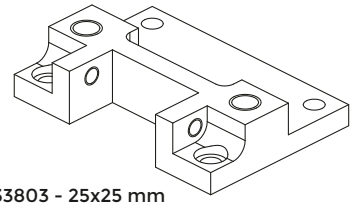

123-33803 - 25x25 mm

FACE AND O.D. CUTTING HOLDER

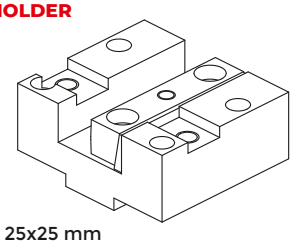

122-13802 - 25x25 mm

QUALIFIED TOOL

ACCESSORIES

TOOLHOLDER FOR BORING BAR

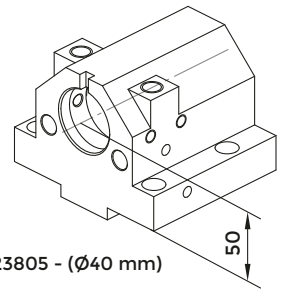

121-23805 - (Ø40 mm)

BORING BAR SLEEVE

p. 726

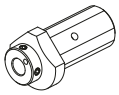

5581 (Ø8 mm)
5582 (Ø10 mm)
5583 (Ø12 mm)
5585 (Ø16 mm)
5587 (Ø20 mm)

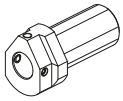

5594 (Ø25 mm)
5595 (Ø32 mm)

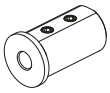

9615 (Ø8 mm)
9616 (Ø10 mm)
9617 (Ø12 mm)

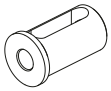

9619 (Ø16 mm)
9621 (Ø20 mm)
9622 (Ø25 mm)
9623 (Ø32 mm)

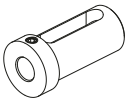

8768 (Ø16 mm)
8770 (Ø20 mm)
8771 (Ø25 mm)
8772 (Ø32 mm)

COMBI TOOLHOLDER WITH INTERNAL COOLANT FOR BORING BAR AND INSERT DRILL

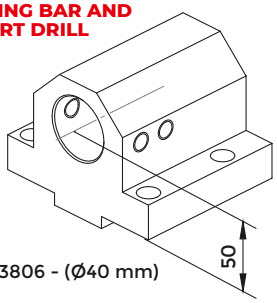

121-23806 - (Ø40 mm)

5596 (Ø20 mm)
5597 (Ø25 mm)
5598 (Ø32 mm)

CONNECTION

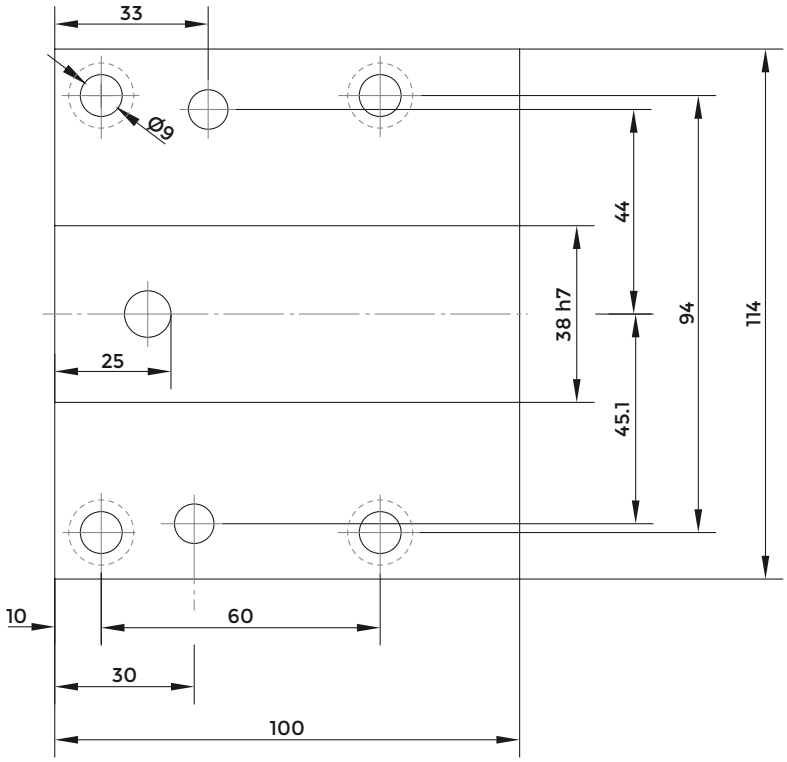

RADIAL TOOLHOLDER

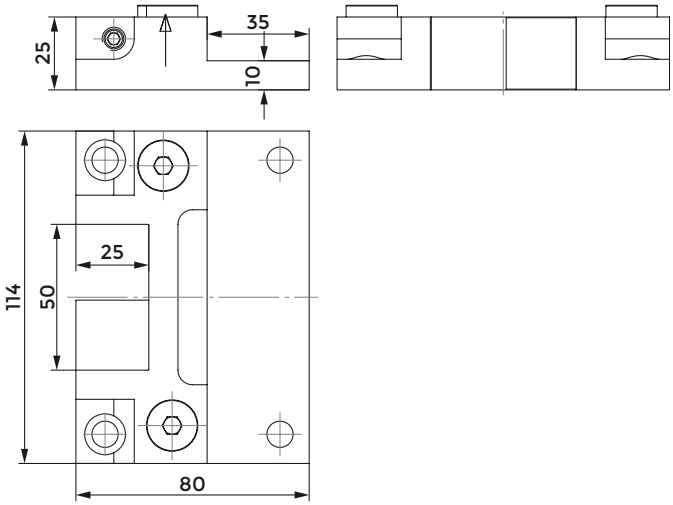

COD.	CLAMPING SCREW	CLAMPING PLATE	SCREW
123-33803	811-102027	832-002170	811-302110

AXIAL TOOLHOLDER

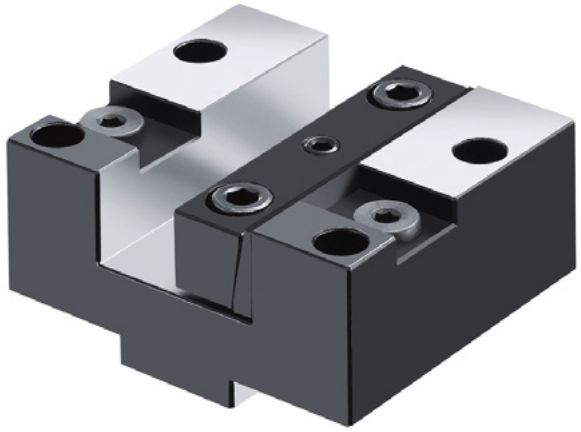

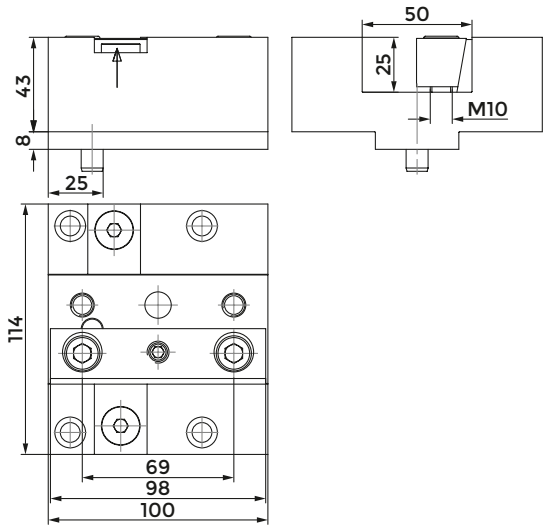

COD.	CLAMPING SCREW	PIN	SCREW
122-13802	832-007220	815-210620	811-302110

TOOLHOLDER FOR BORING BAR Ø40

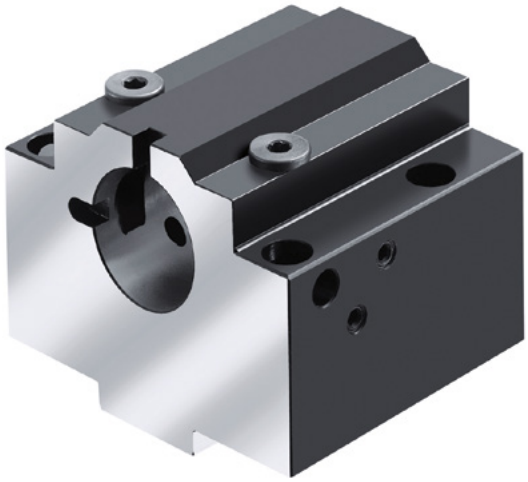

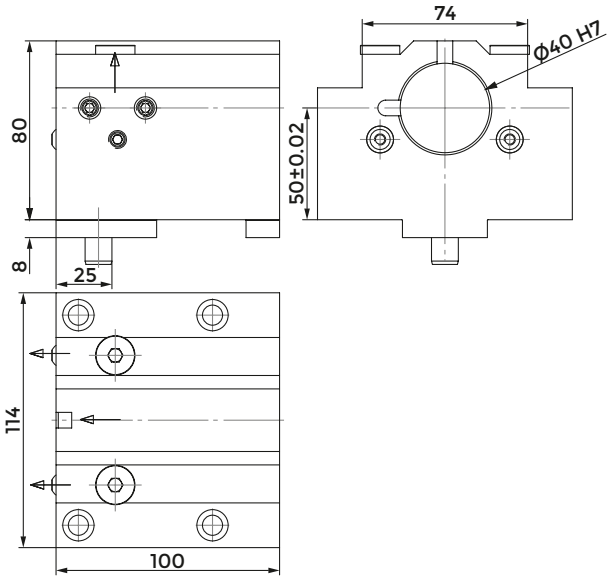

COD.	CLAMPING SCREW	PIN	SCREW	COOLANT NOZZLE
121-23805	811-102030	815-210610	811-302110	833-001080

TOOLHOLDER FOR INSERT DRILL WITH INTERNAL COOLANT

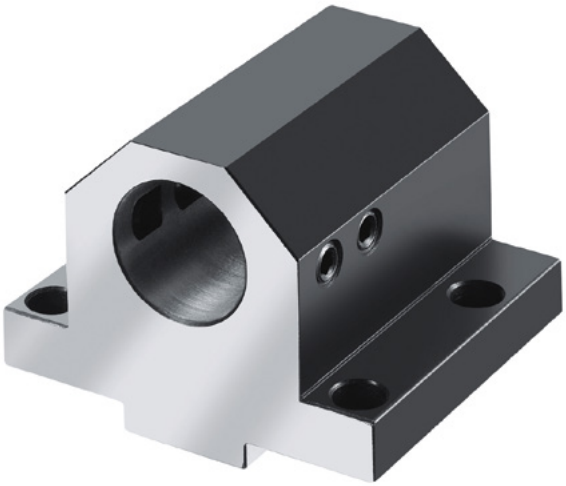

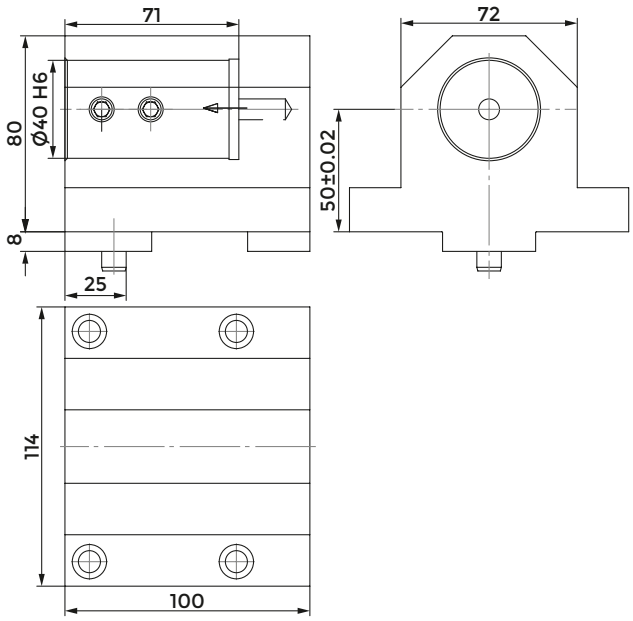

COD.	CLAMPING SCREW	SCREW
121-23806	811-102043	815-210620

MAZAK SQT - MAZAK QTN (VDI40)

Index of machines p. 361

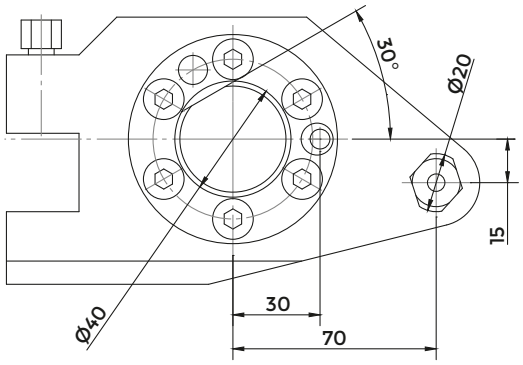

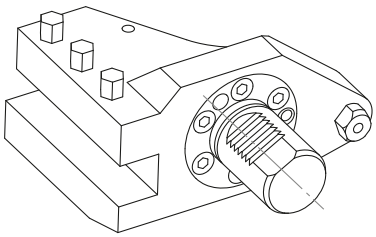

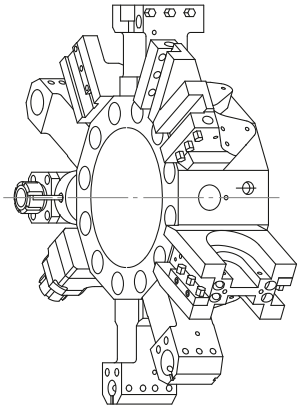

ACCESSORIES

QUALIFIED TOOL

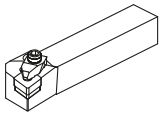

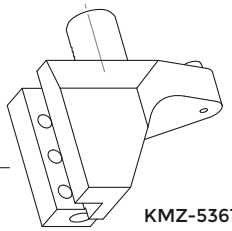

KMZ-53618000100

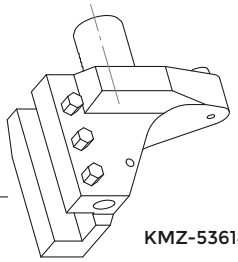

KMZ-53618000600

KMZ-53638000300

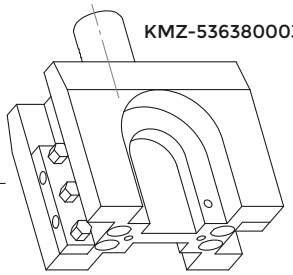

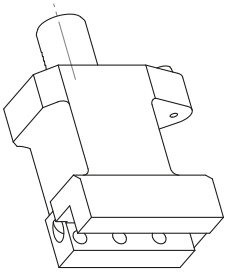

KMZ-53618000300

BORING BAR SLEEVE

p. 726

5581 (Ø8 mm)
5582 (Ø10 mm)
5583 (Ø12 mm)
5585 (Ø16 mm)
5587 (Ø20 mm)

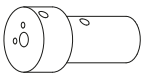

5594 (Ø25 mm)
5595 (Ø32 mm)

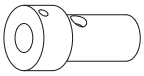

9615 (Ø8 mm)
9616 (Ø10 mm)
9617 (Ø12 mm)

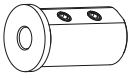

9619 (Ø16 mm)
9621 (Ø20 mm)
9622 (Ø25 mm)
9623 (Ø32 mm)

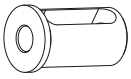

8768 (Ø16 mm)
8770 (Ø20 mm)
8771 (Ø25 mm)
8772 (Ø32 mm)

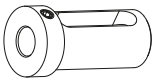

5596 (Ø20 mm)
5597 (Ø25 mm)
5598 (Ø32 mm)

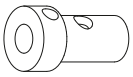

KMZ-53208005100

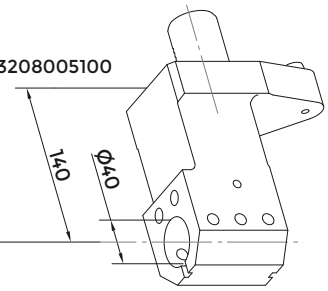

KMZ-53638000400

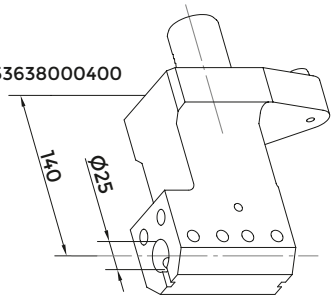

KMZ-53208005200

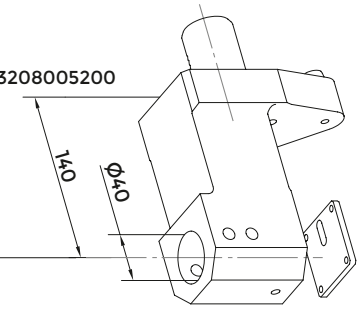

CUT-OFF TOOL

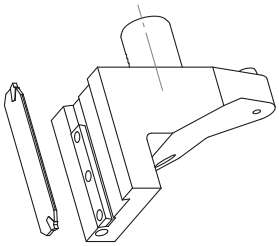

KMZ-53618000400

COLLET ER32

p. 339

116-54019

COLLET ER32

p. 339

116-54020

MAZAK (BMT68)

Index of machines p. 361

FACE AND O.D. CUTTING HOLDER

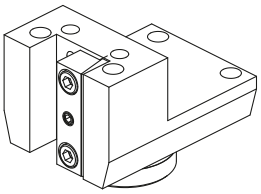

137-00273

FACE AND O.D. CUTTING HOLDER

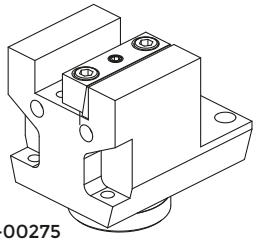

137-00275

CUT-OFF HOLDER

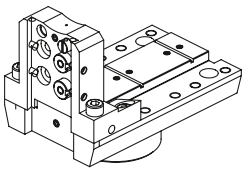

137-00279
137-00279-IC

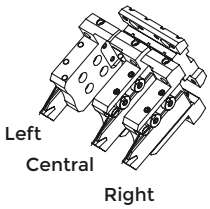

FACE AND O.D. CUTTING HOLDER

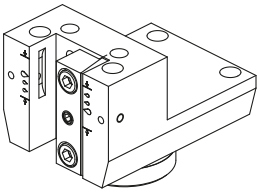

137-00273-IC

FACE AND O.D. CUTTING HOLDER

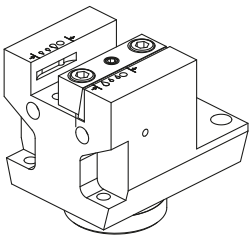

137-00275-IC

FAST-IN p. 506
DRIVEN TOOLS p. 302

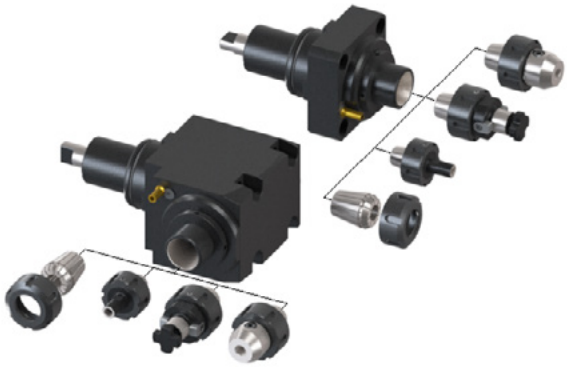

COMBI TOOLHOLDER WITH INTERNAL COOLANT FOR BORING BAR AND INSERT DRILL

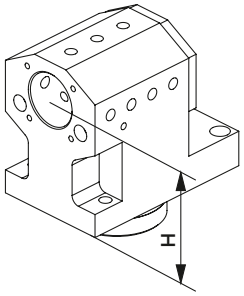

137-00278 (H=95 mm) - Ø40 mm

POLYGONAL TOOL HOLDER

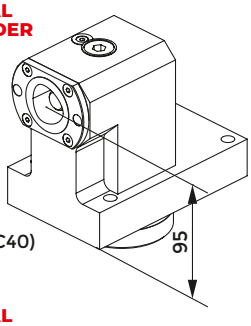

137-00281 (C40)

POLYGONAL TOOL HOLDER

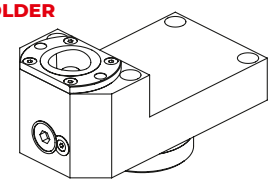

137-00282 (C40)

ACCESSORIES

BORING BAR SLEEVE
p. 726

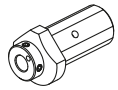

5581 (Ø8 mm)
5582 (Ø10 mm)
5583 (Ø12 mm)
5585 (Ø16 mm)
5587 (Ø20 mm)

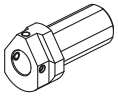

5594 (Ø25 mm)
5595 (Ø32 mm)

5596 (Ø20 mm)
5597 (Ø25 mm)
5598 (Ø32 mm)

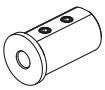

9615 (Ø8 mm)
9616 (Ø10 mm)
9617 (Ø12 mm)

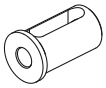

9619 (Ø16 mm)
9621 (Ø20 mm)
9622 (Ø25 mm)
9623 (Ø32 mm)

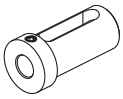

8768 (Ø16 mm)
8770 (Ø20 mm)
8771 (Ø25 mm)
8772 (Ø32 mm)

CONTROL PIN
p. 758

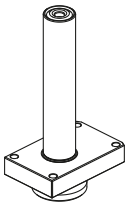

137-00201

PROTECTION COVER

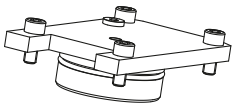

137-00272

CONNECTION

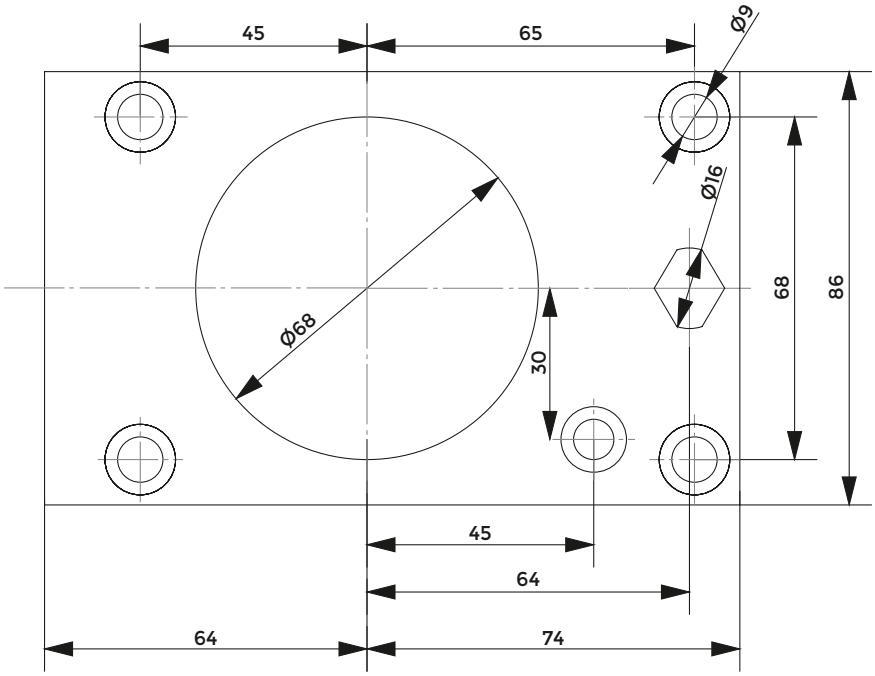

RADIAL TOOLHOLDERS

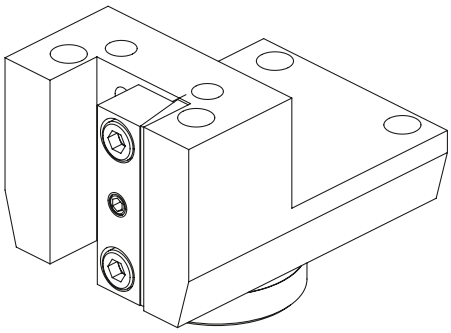

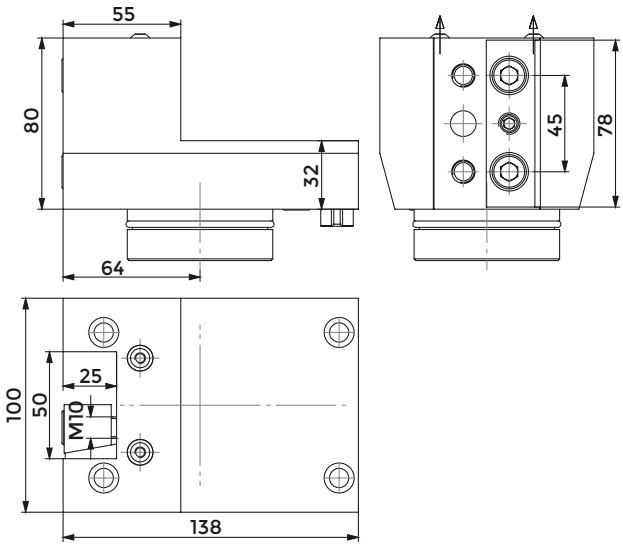

COD.	INTERNAL COOLANT	CLAMPING PLATE	PIN	COOLANT NOZZLE	CENTRAL PIN	SCREW FOR PIN	O RING FOR PIN (62X3)	O RING FOR PIN (54X3)	O RING FOR COOLANT (9X2)
						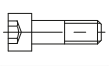			
137-00273	NO	832-007470	832-008064	833-001080	832-020711	811-101031	823-101124	823-101077	823-101015
137-00273-IC	SI	832-007470	832-008064	833-001080	832-020711	811-101031	823-101124	823-101077	823-101015

AXIAL TOOLHOLDERS

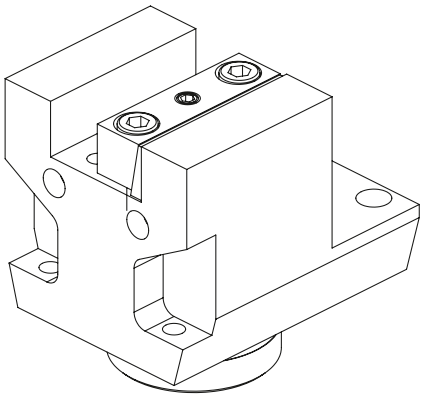

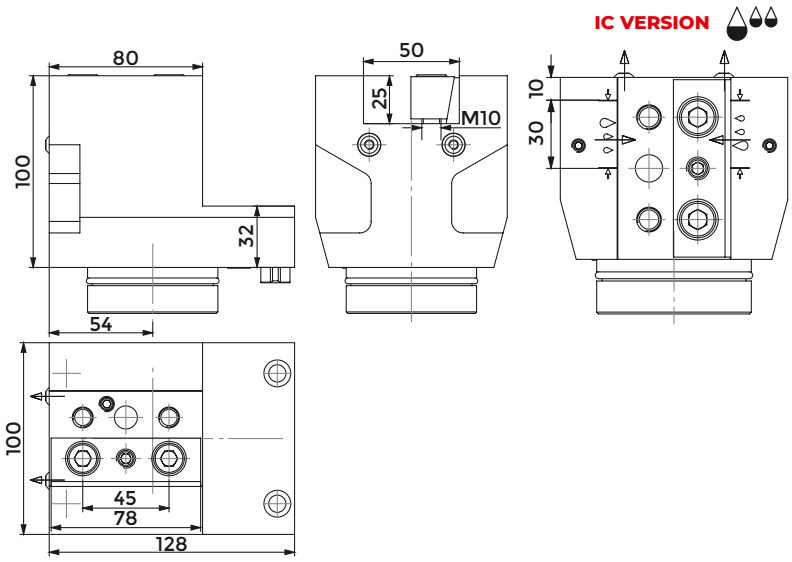

COD.	INTERNAL COOLANT	CLAMPING PLATE	PIN	COOLANT NOZZLE	CENTRAL PIN	SCREW FOR PIN	O RING FOR PIN (62X3)	O RING FOR PIN (54X3)	O RING FOR COOLANT (9X2)
137-00275	NO	832-007470	832-008064	833-001080	832-020711	811-101031	823-101124	823-101077	823-101015
137-00275-IC	SI	832-007470	832-008064	833-001080	832-020711	811-101031	823-101124	823-101077	823-101015

CUT-OFF HOLDER

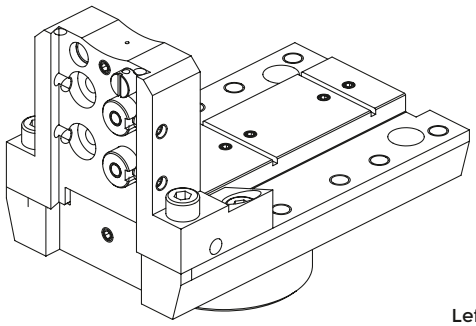

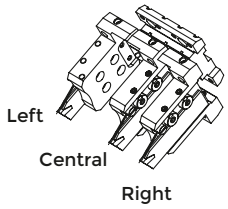

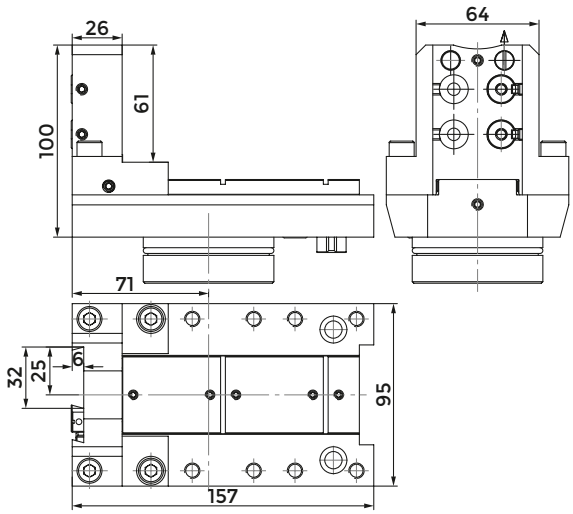

COD.	INTERNAL COOLANT	COOLANT NOZZLE	O RING FOR COOLANT NOZZLE	O RING FOR BODY	O RING FOR INTERNAL COOLANT	PIN	SHIM PLATE	SCREW FOR PLATE
137-00279	NO	833-001490	823-101058	823-101061	-	832-008064	832-014448	811-108037
137-00279-IC	SI	833-001490	823-101058	823-101061	823-201140	832-008064	832-014448	811-108037

COD.	CLAMPING PIN	SPRING	CLAMPING SCREW	SCREW	CENTRAL PIN	SCREW FOR PIN	O RING FOR PIN (62X3)	O RING FOR PIN (54X3)	O RING FOR COOLANT (9X2)
137-00279	832-014450	824-300012	811-101029	811-104013	832-020711	811-101031	823-101124	823-101077	823-101015
137-00279-IC	832-014450	824-300012	811-101029	811-104013	832-020711	811-101031	823-101124	823-101077	823-101015

COMBI TOOLHOLDER WITH INTERNAL COOLANT FOR BORING BAR AND INSERT DRILL

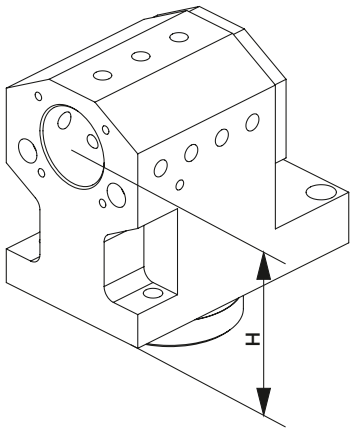

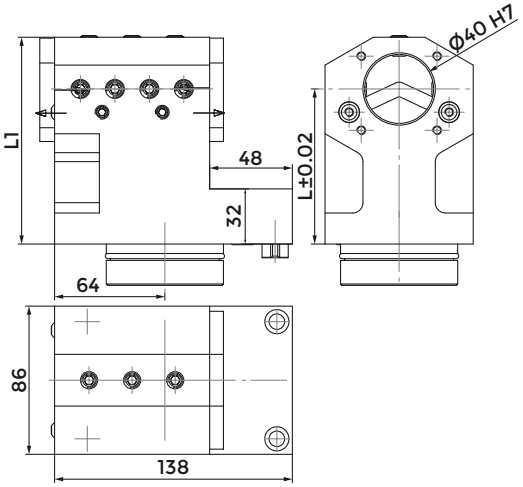

COD.	L	L1	CLAMPING SCREW 1 (M10X20)	CLAMPING SCREW 1 (M10X12)	PIN	COOLANT NOZZLE	COVER FOR INTERNAL COOLANT
137-00278	95	125	811-102038	811-102036	832-008064	833-001080	832-003403

COD.	SCREW FOR COVER	CENTRAL PIN	SCREW FOR PIN	O RING FOR PIN (62X3)	O RING FOR PIN (54X3)	O RING FOR COOLANT (9X2)
137-00278	811-104013	832-020711	811-101031	823-101124	823-101077	823-101015

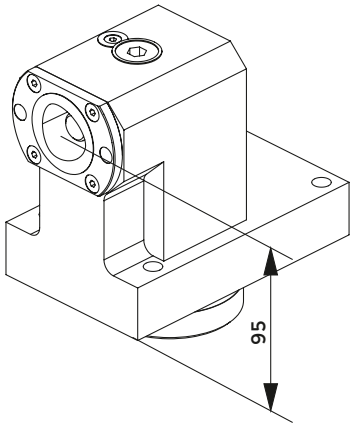

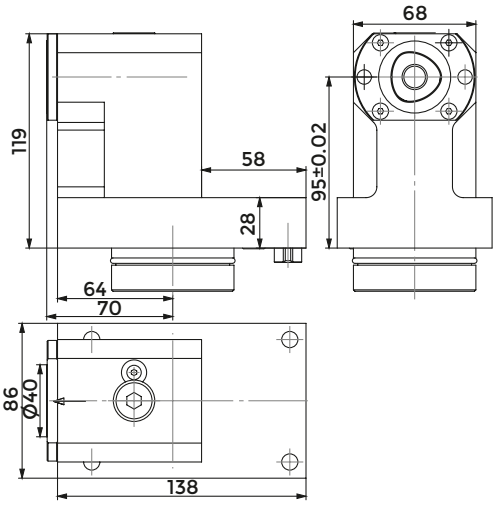

COD.	CAPTO	CLAMPING UNIT	PIN	CENTRAL PIN	SCREW FOR PIN	O RING FOR PIN (62X3)	O RING FOR PIN (54X3)	O RING FOR COOLANT (9X2)
137-00281	C40	CXC40-10	832-008064	832-020711	811-101031	823-101124	823-101077	823-101015

POLIGONAL TOOLHOLDERS

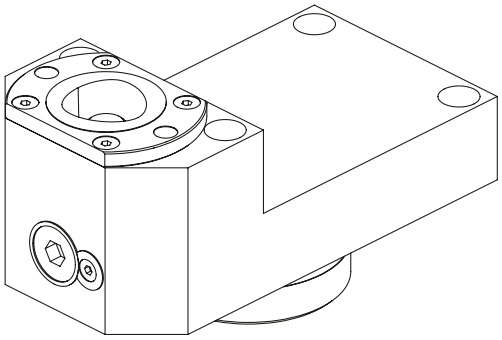

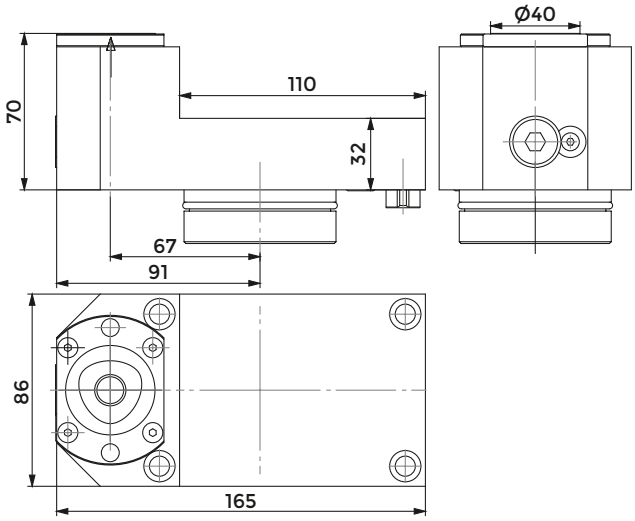

COD.	CAPTO	CLAMPING UNIT	PIN	CENTRAL PIN	SCREW FOR PIN	O RING FOR PIN (62X3)	O RING FOR PIN (54X3)	O RING FOR COOLANT (9X2)
					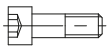			
137-00282	C40	CXC40-10	832-008064	832-020711	811-101031	823-101124	823-101077	823-101015

PROTECTION COVER

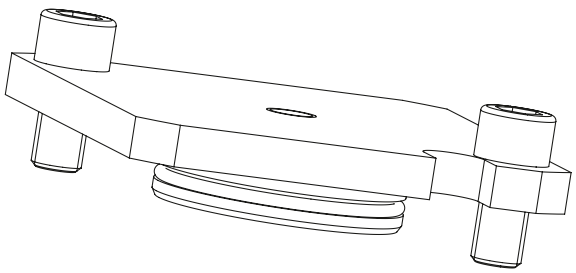

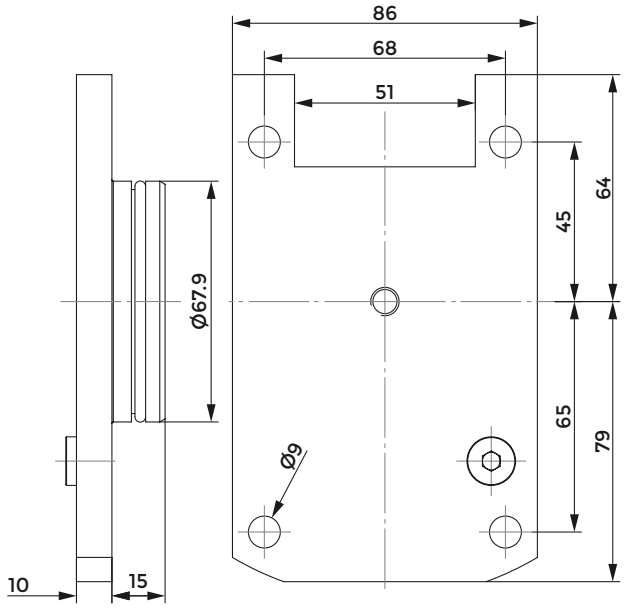

COD.	O RING	SCREW
137-00272	823-101124	811-302106

MAZAK MURATEC MW120

Index of machines p. 361

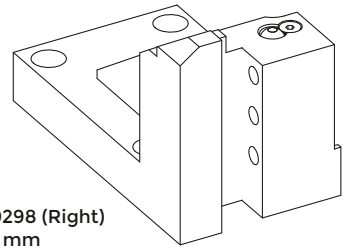

137-00298 (Right)
20x20 mm

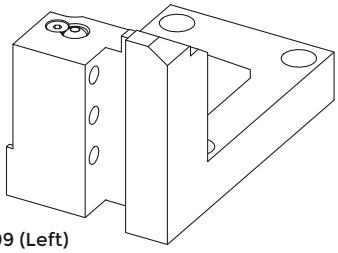

137-00299 (Left)
20x20 mm

QUALIFIED TOOL

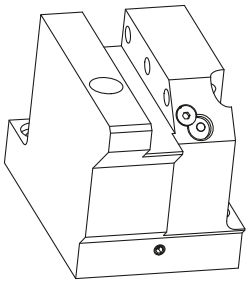

137-00296 (Right)
20x20 mm

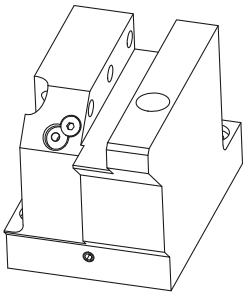

137-00297 (Left)
20x20 mm

ACCESSORIES

BORING BAR SLEEVE
p. 726

COMBI TOOLHOLDER WITH INTERNAL COOLANT FOR BORING BAR AND INSERT DRILL

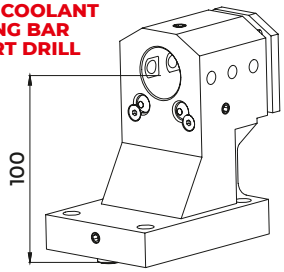

137-00300 - (Ø40 mm)

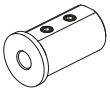

9615 (Ø8 mm)
9616 (Ø10 mm)
9617 (Ø12 mm)

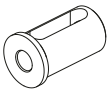

9619 (Ø16 mm)
9621 (Ø20 mm)
9622 (Ø25 mm)
9623 (Ø32 mm)

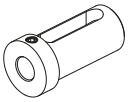

8768 (Ø16 mm)
8770 (Ø20 mm)
8771 (Ø25 mm)
8772 (Ø32 mm)

CONNECTION

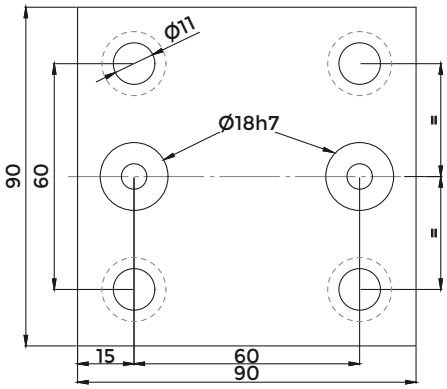

POLYGONAL TOOL HOLDER

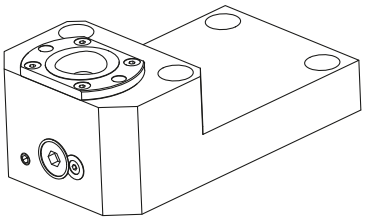

137-00262 C40
137-00314 C50

POLYGONAL TOOL HOLDER

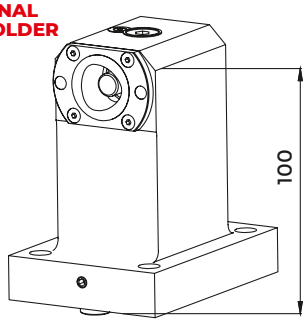

137-00263 C40
137-00313 C50

MAZAK MURATEC MW200

Index of machines p. 361

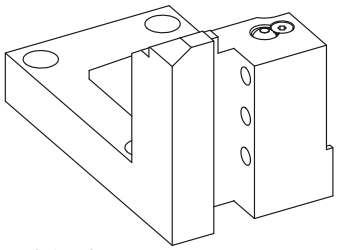

137-00259 (Right)
25x25 mm

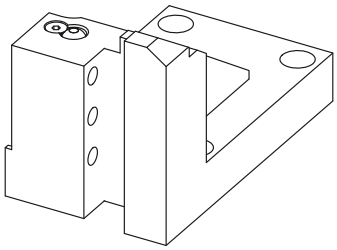

137-00260 (Left)
25x25 mm

QUALIFIED TOOL

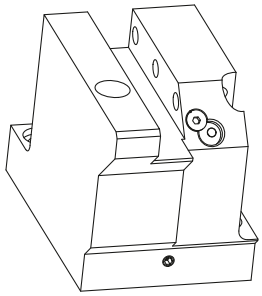

137-00265 (Right)
25x25 mm

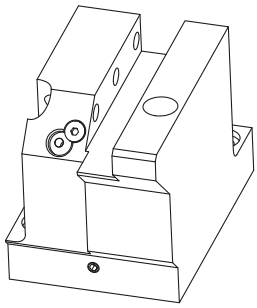

137-00266 (Left)
25x25 mm

ACCESSORIES

COMBI TOOLHOLDER WITH INTERNAL COOLANT FOR BORING BAR AND INSERT DRILL

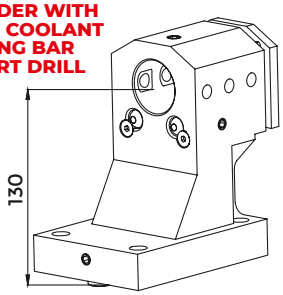

137-00271 - (Ø40 mm)

BORING BAR SLEEVE
p. 726

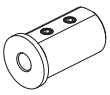

9615 (Ø8 mm)
9616 (Ø10 mm)
9617 (Ø12 mm)

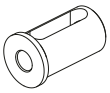

9619 (Ø16 mm)
9621 (Ø20 mm)
9622 (Ø25 mm)
9623 (Ø32 mm)

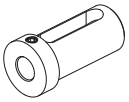

8768 (Ø16 mm)
8770 (Ø20 mm)
8771 (Ø25 mm)
8772 (Ø32 mm)

CONNECTION

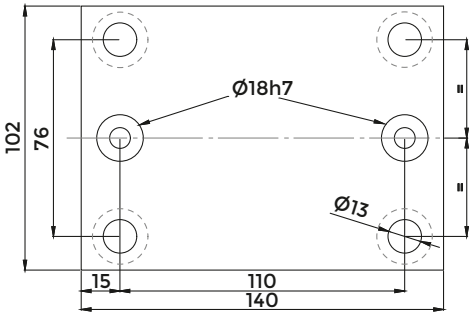

POLYGONAL TOOL HOLDER

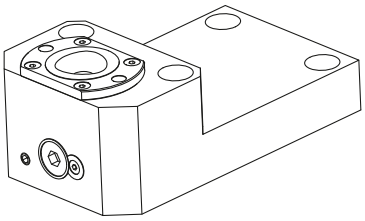

137-00237 C40
137-00312 C50

POLYGONAL TOOL HOLDER

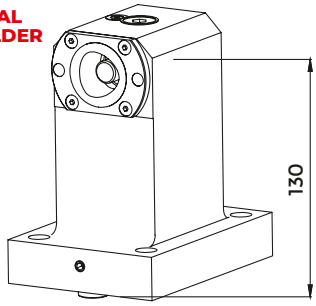

137-00236 C40
137-00311 C50

DRIVEN TOOLS
FAST IN

TOOLHOLDERS WITH SHANK ER25-ER32 - SHORT- LONG

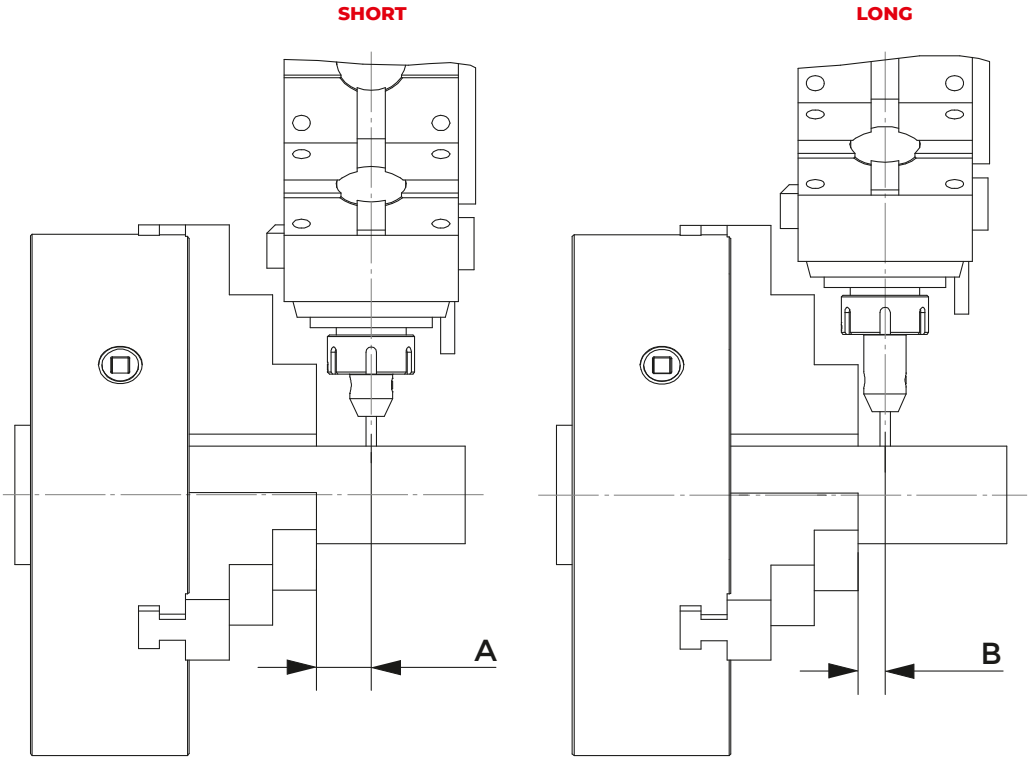

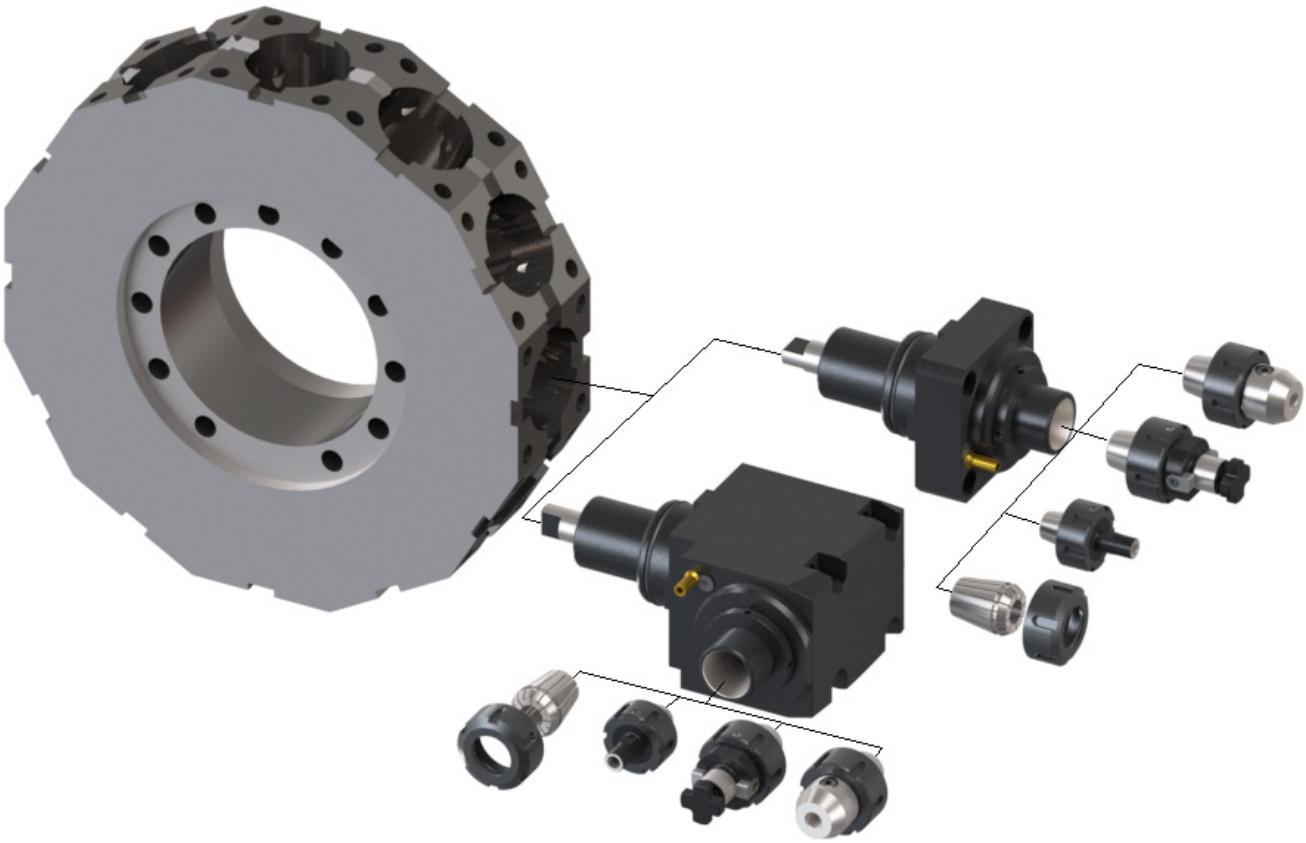

END MILL HOLDERS FOR MILLING CUTTERS WITH THREADED SHANKS

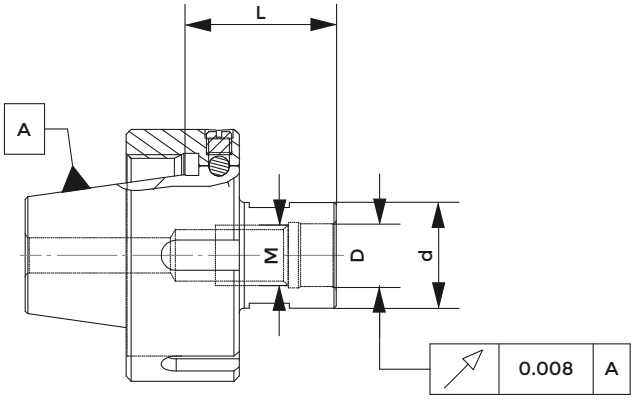

SHORT

COD.	DESCRIPTION	M	D	d	L
217-86705	ER25H35M08	M8	8,5	13	35
217-86707	ER25H30M12	M12	12,5	21	30
217-86708	ER25H25M16	M16	17	29	25
217-86701	ER32H35M08	M8	8,5	13	35
217-86702	ER32H35M10	M10	10,5	18	35
217-86703	ER32H30M12	M12	12,5	21	30
217-86704	ER32H25M16	M16	17	29	25

HOLDERS FOR WELDON TYPE END MILL

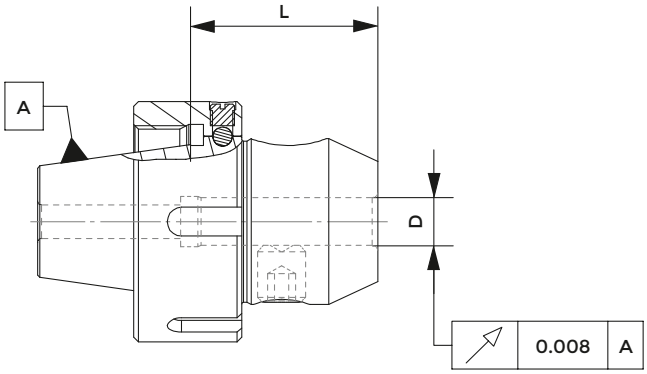

SHORT

COD.	DESCRIPTION	D	L
213-16707	ER25H35WE06	6	35
213-16708	ER25H35WE08	8	35
213-16709	ER25H39WE10	10	39
213-16710	ER25H43WE12	12	43
213-16701	ER32H35WE06	6	35
213-16702	ER32H35WE08	8	35
213-16703	ER32H39WE10	10	39
213-16704	ER32H43WE12	12	43
213-16705	ER32H43WE14	14	43
213-16706	ER32H45WE16	16	45

FACE MILL HOLDERS-TENONS DRIVE

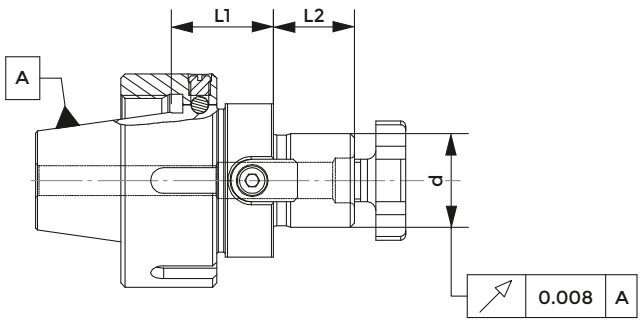

SHORT

COD.	DESCRIPTION	d	L1	L2
216-76704	ER25H22D16	16	22	17
216-76705	ER25H24D22	22	24	19
216-76701	ER32H22D16	16	22	17
216-76702	ER32H24D22	22	24	19
216-76703	ER32H26D27	27	26	21

ER COLLET CHUCK

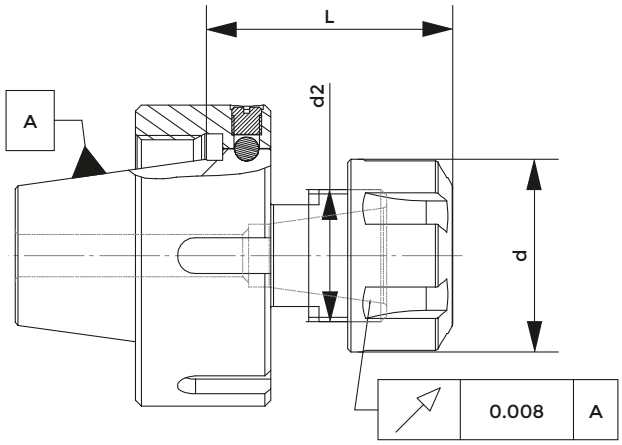

SHORT

COD.	DESCRIPTION	ER	d	d2	L
214-36701	ER25H41ER16	16	32	22	41
214-36702	ER25H43ER20	20	35	25	43
214-36703	ER25H45ER25	25	42	32	45
214-36704	ER32H41ER16	16	32	22	41
214-36705	ER32H43ER20	20	35	25	43
214-36706	ER32H45ER25	25	42	32	45
214-36707	ER32H48ER32	32	50	40	48

END MILL HOLDERS FOR MILLING CUTTERS WITH THREADED SHANKS

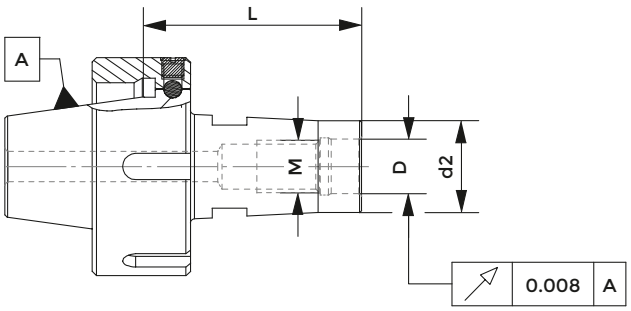

LONG

COD.	DESCRIPTION	M	D	d2	L
217-86713	ER32H55M08	M8	8,5	13	55
217-86714	ER32H55M10	M10	10,5	18	55
217-86715	ER32H50M12	M12	12,5	21	50
217-86716	ER32H45M16	M16	17	29	45

HOLDERS FOR WELDON TYPE END MILL

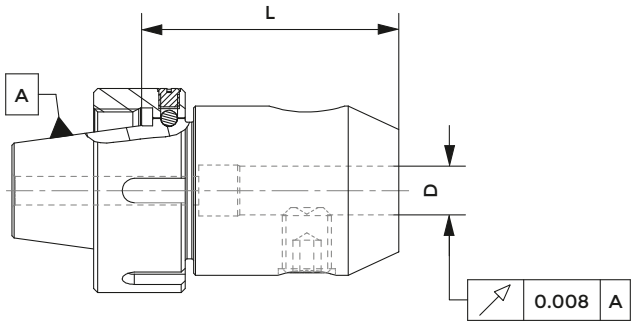

LONG

COD.	DESCRIPTION	D	L
213-16711	ER25H55WE06	6	55
213-16712	ER25H55WE08	8	55
213-16713	ER25H59WE10	10	59
213-16714	ER25H63WE12	12	63
213-16715	ER32H55WE06	6	55
213-16716	ER32H55WE08	8	55
213-16717	ER32H59WE10	10	59
213-16718	ER32H63WE12	12	63
213-16719	ER32H63WE14	14	63
213-16720	ER32H65WE16	16	65

FACE MILL HOLDERS-TENONS DRIVE

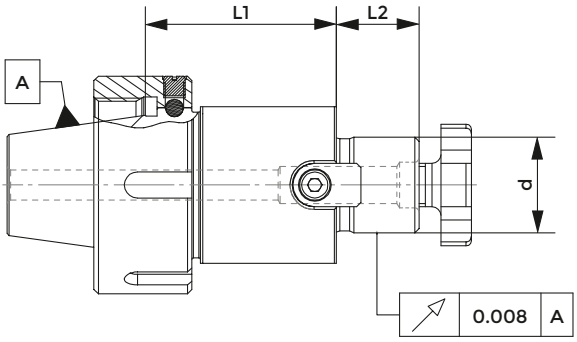

LONG

COD.	DESCRIPTION	d	L1	L2
216-76707	ER25H44D22	22	44	19
216-76708	ER32H42D16	16	42	17
216-76709	ER32H44D22	22	44	19

BLANK TOOLHOLDER WITH SOFT SHANK

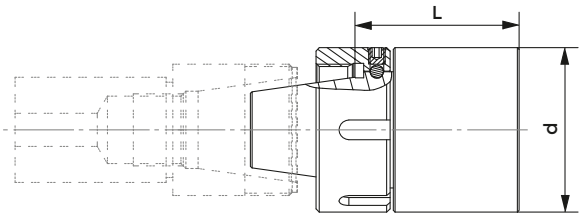

COD.	DESCRIPTION	d	L
217-46701	ER25H70D40SML	40	70
217-46702	ER32H70D50SML	50	70

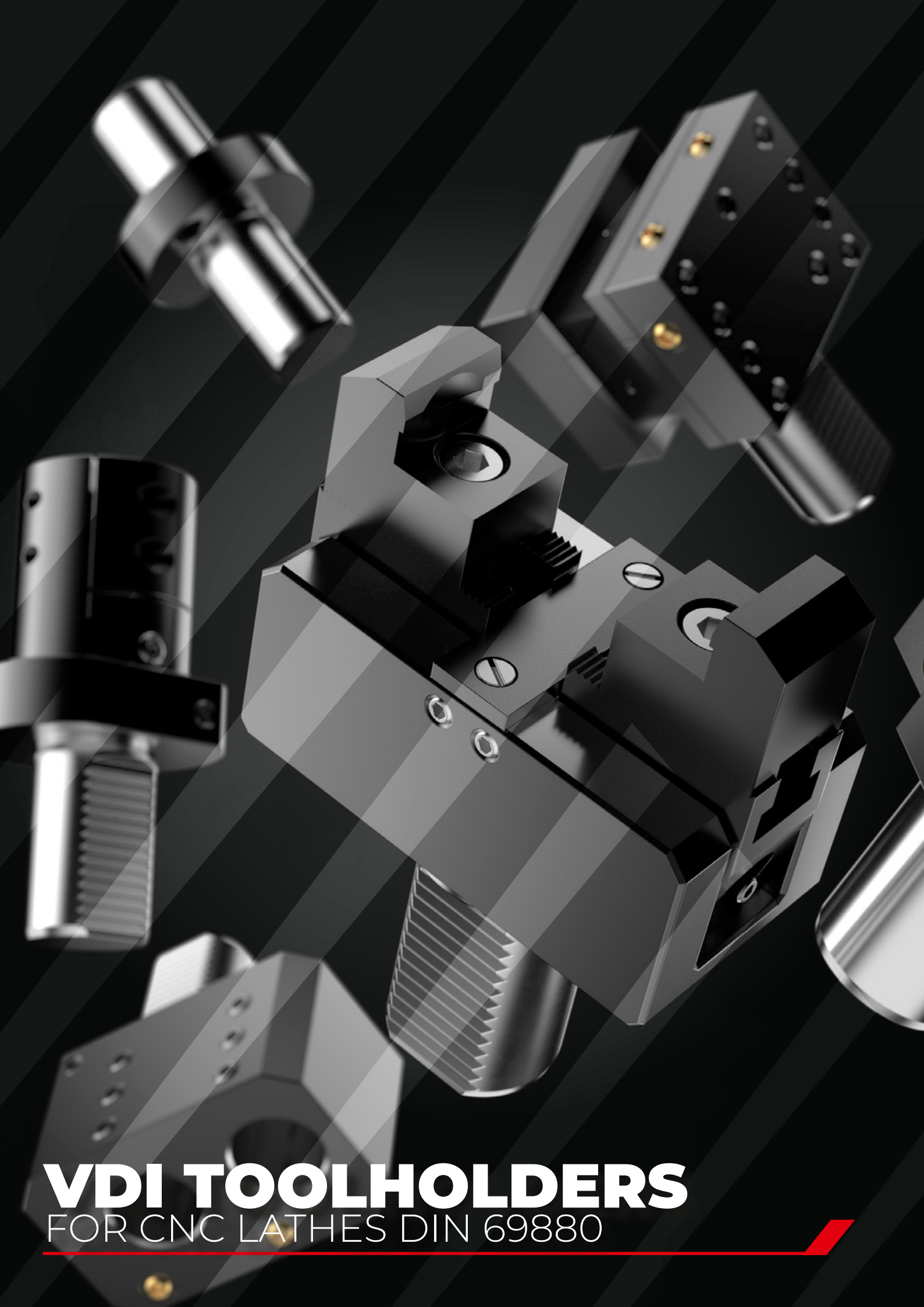

VDI TOOLHOLDERS

FOR CNC LATHES DIN 69880

TOOL HOLDER WITH PARALLEL SHANK, TECHNICAL SPECIFICATIONS

Detail Y

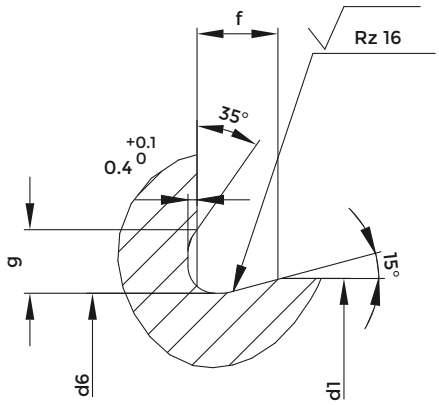

Detail Z

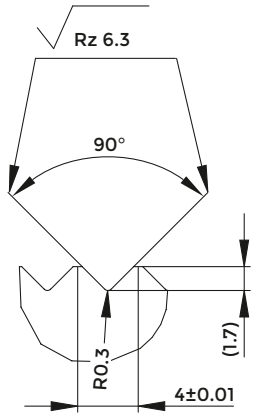

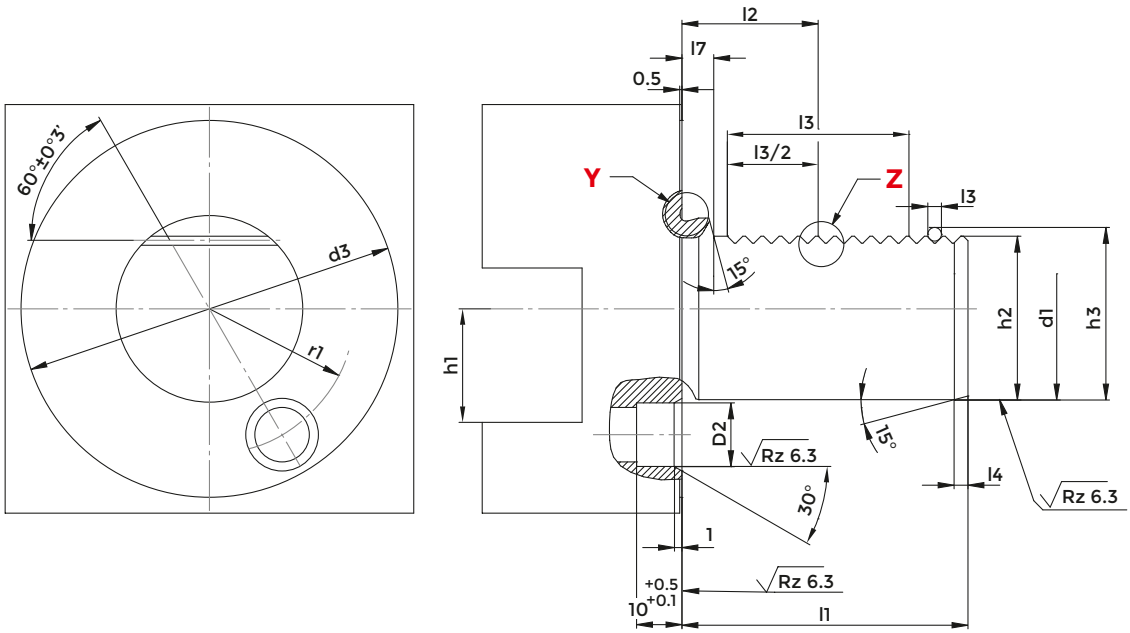

DIN69880

d1 h6	l1 ±0.3	D2	d3	d6 _0.1	f	g	h1 max.	h2 ±0.1	h3 ±0.1	l2 ±0.05	l3 min.	l4 +1	l7	r1 ±0.02	O-RING
16	32	8 H6	40	15.4	2.0	1.7	12	15	16.92	12.7	16	2	3.5	14.5	15x1,5
20	40	10 H6	50	19.1	2.4	2	16	18	19.92	21.7	24	2	7	18	18,77x1,78
25	48	10 H6	58	24.1	2.4	2	16	23.5	25.42	21.7	24	2	7	21	23,52x1,78
30	55	14 H8	68	29.1	2.4	2	20	27	28.92	29.7	40	2	7	25	28,3x1,78
40	63	14 H8	83	38.7	3.7	2.8	25	36	37.92	29.7	40	3	7	32	37,77x2,62
50	78	16 H8	98	48.7	3.7	2.8	32	45	46.92	35.7	48	3	8	37	47,29x2,62
60	94	16 H8	123	58.7	4.3	3.7	32	55	56.92	43.7	56	4	10	48	56,74x3,53
80	124	20 H8	158	78.7	4.3	3.7	40	72	73.92	59.7	80	4	10	65	75,79x3,53

O-ring included in radial VDI

USE OF RADIAL VDI TOOLHOLDERS

WITH M4 SPINDLE ROTATION

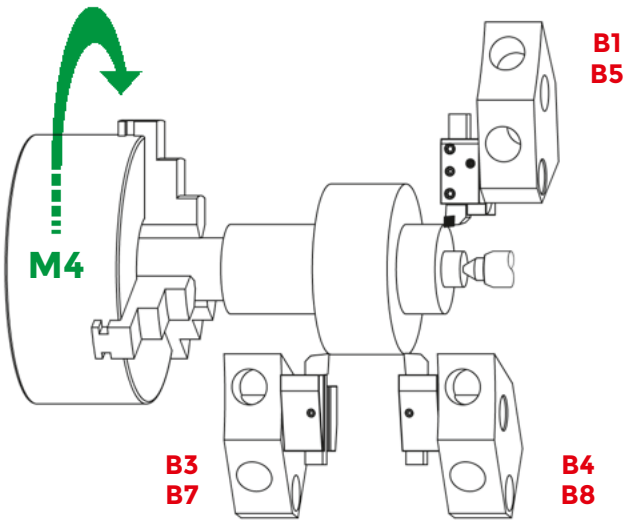

WITH M3 SPINDLE ROTATION

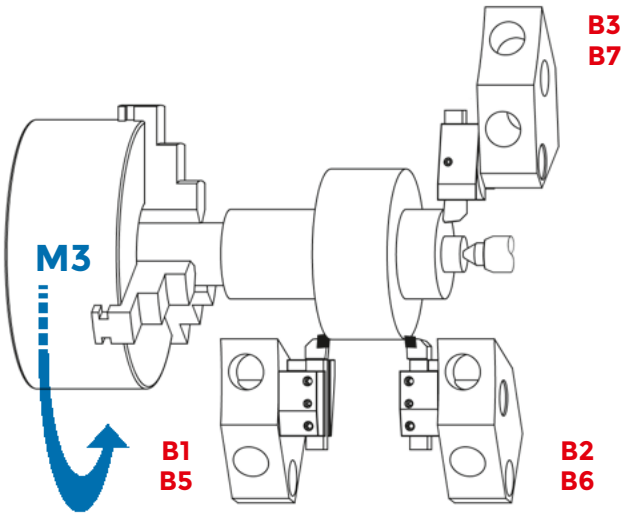

USE OF AXIAL VDI TOOLHOLDERS

WITH M4 SPINDLE ROTATION

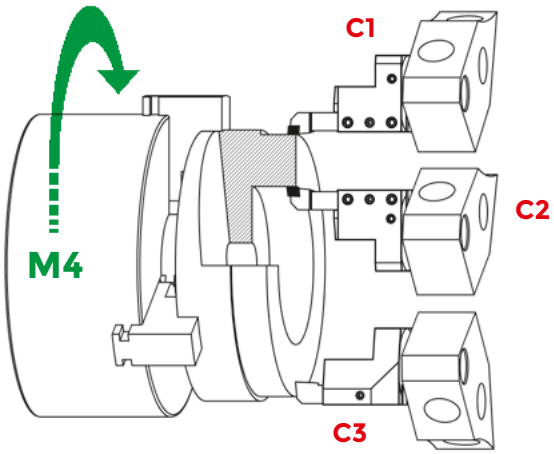

WITH M3 SPINDLE ROTATION

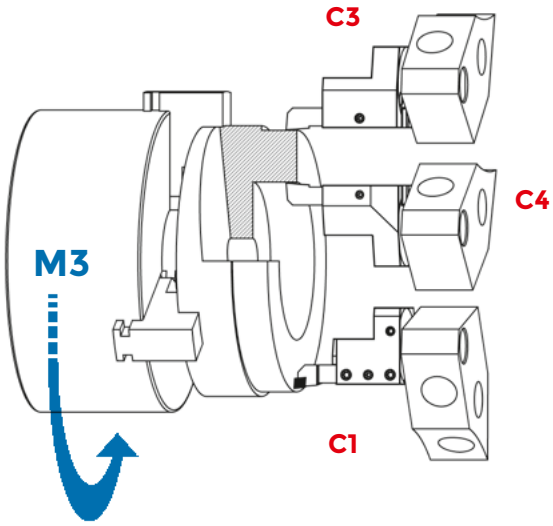

RECTANGULAR BLANK FOR SPECIAL VERSIONS

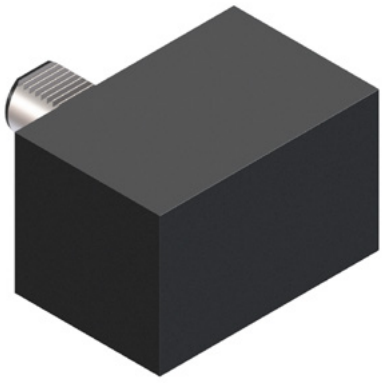

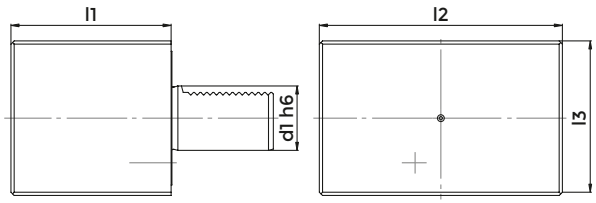

DIN 69880 - A1

COD.	d1	l1	l2	l3
A1-30x85	30	85	130	76
A1-40x100	40	100	151	96
A1-50x125	50	125	160	120
A1-60x160	60	160	165	125

ROUND BLANK FOR SPECIAL VERSIONS

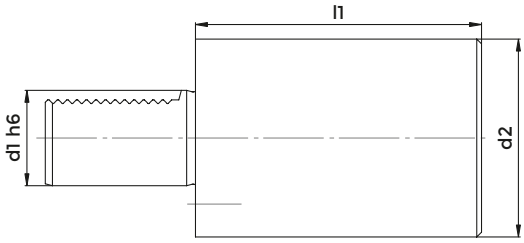

DIN 69880 - A2

COD.	d1	d2	l1
A2-16x60	16	40	60
A2-20x70	20	50	70
A2-25x200	25	58	200
A2-30x100	30	68	100
A2-30x240	30	68	240
A2-40x120	40	83	120
A2-40x320	40	83	320
A2-50x135	50	98	135
A2-50x400	50	98	400
A2-60x150	60	123	150
A2-60x480	60	123	480

RADIAL HOLDER, RH, SHORT

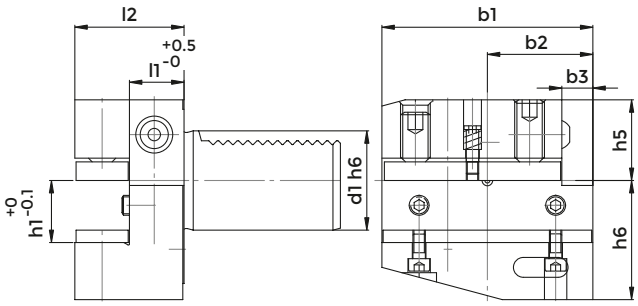

DIN 69880 - B1

COD.	d1	b1	b2	b3	h1	h5	h6	l1	l2
B1-16x12x24	16	42	23	5	12	20	22	13	24
B1-20x16x30	20	55	30	7	16/12	25	30	16	30
B1-30x20x40	30	70	35	10	20/16	28	38	22	40
B1-30x20x60	30	70	35	10	20/16	28	38	42	60
B1-40x25x44	40	85	42.5	12.5	25/20	32.5	48	22	44
B1-50x32x55	50	100	50	16	32/25	35	60	30	55
B1-60x32x60	60	125	62.5	16	32/25	42.5	62.5	30	60

Spare parts p. 542

RADIAL HOLDER, RH, SHORT

IC VERSION

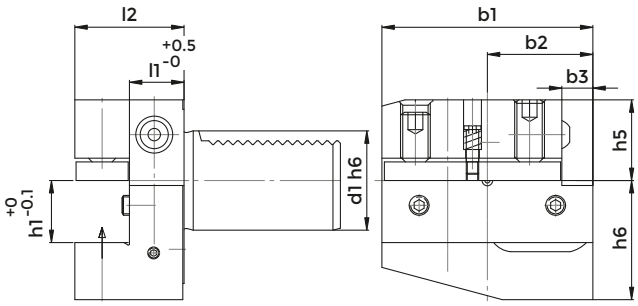

DIN 69880 - B1

COD.	d1	b1	b2	b3	h1	h5	h6	l1	l2
B1-30x20x40-IC	30	70	35	10	20	28	38	22	40
B1-40x25x44-IC	40	85	42.5	12.5	25	32.5	48	22	44

Spare parts p. 542

RADIAL HOLDER, LH, SHORT

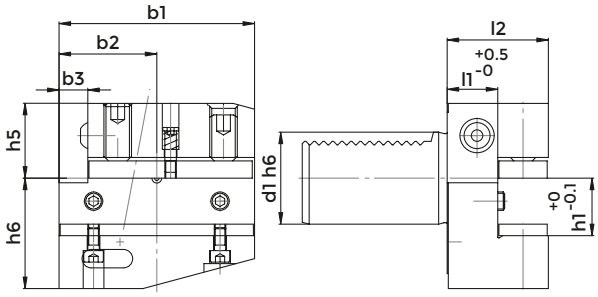

DIN 69880 - B2

COD.	d1	b1	b2	b3	h1	h5	h6	l1	l2
B2-20x16x30	20	55	30	7	16/12	25	30	16	30
B2-30x20x40	30	70	35	10	20/16	28	38	22	40
B2-30x20x60	30	70	35	10	20/16	28	38	42	60
B2-40x25x44	40	85	42.5	12.5	25/20	32.5	48	22	44
B2-50x32x55	50	100	50	16	32/25	35	60	30	55
B2-60x32x60	60	125	62.5	16	32/25	42.5	62.5	30	60

Spare parts p. 542

RADIAL HOLDER, LH, SHORT

IC VERSION

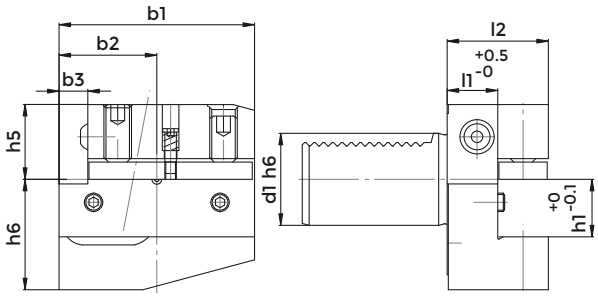

DIN 69880 - B2

COD.	d1	b1	b2	b3	h1	h5	h6	l1	l2
B2-30x20x40-IC	30	70	35	10	20	28	38	22	40
B2-40x25x44-IC	40	85	42.5	12.5	25	32.5	48	22	44

Spare parts p. 542

RADIAL HOLDER, UPSIDE-DOWN, RH, SHORT

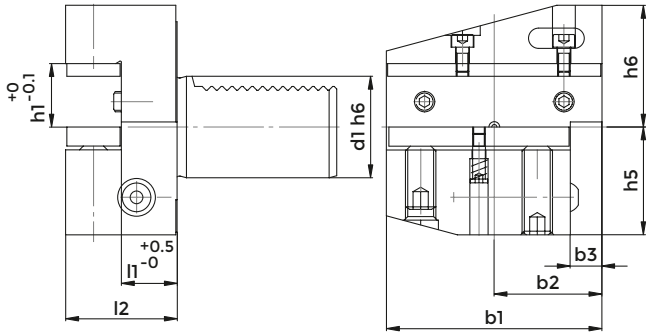

DIN 69880 - B3

COD.	d1	b1	b2	b3	h1	h5	h6	l1	l2
B3-16x12x24	16	42	23	5	12	20	22	13	24
B3-20x16x30	20	55	30	7	16/12	25	30	16	30
B3-20x16x40	20	55	30	7	16/12	25	30	26	40
B3-30x20x40	30	70	35	10	20/16	35	38	22	40
B3-40x25x44	40	85	42.5	12.5	25/20	42.5	48	22	44
B3-50x32x55	50	100	50	16	32/25	50	60	30	55
B3-60x32x60	60	125	62.5	16	32/25	62.5	62.5	30	60

Spare parts p. 542

RADIAL HOLDER, UPSIDE-DOWN, RH, SHORT

IC VERSION

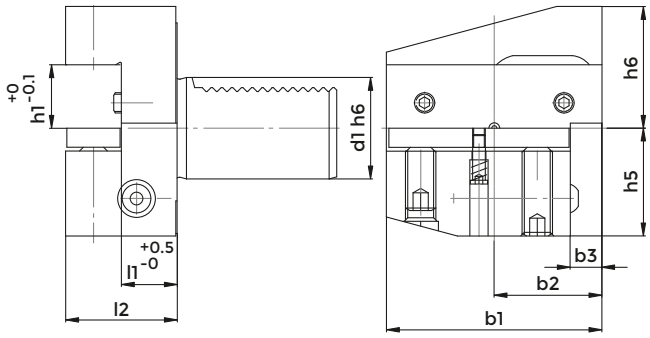

DIN 69880 - B3

COD.	d1	b1	b2	b3	h1	h5	h6	l1	l2
B3-30x20x40-IC	30	70	35	10	20	35	38	22	40
B3-40x25x44-IC	40	85	42.5	12.5	25	42.5	48	22	44

Spare parts p. 542

RADIAL HOLDER, UPSIDE-DOWN, LH, SHORT

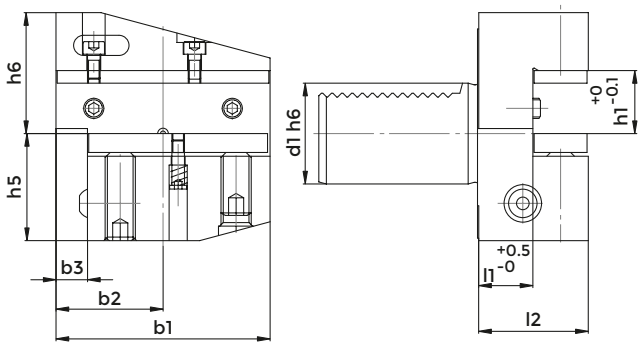

DIN 69880 - B4

COD.	d1	b1	b2	b3	h1	h5	h6	l1	l2
B4-30x20x40	30	70	35	10	20/16	35	38	22	40
B4-40x25x44	40	85	42.5	12.5	25/20	42.5	48	22	44
B4-50x32x55	50	100	50	16	32/25	50	60	30	55
B4-60x32x60	60	125	62.5	16	32/25	62.5	62.5	30	60

Spare parts p. 542

RADIAL HOLDER, UPSIDE-DOWN, LH, SHORT

IC VERSION

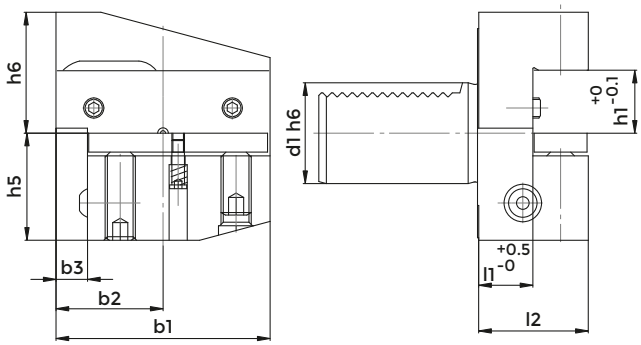

DIN 69880 - B4

COD.	d1	b1	b2	b3	h1	h5	h6	l1	l2
B4-30x20x40-IC	30	70	35	10	20	35	38	22	40
B4-40x25x44-IC	40	85	42.5	12.5	25	42.5	48	22	44

Spare parts p. 542

RADIAL HOLDER, RH, LONG

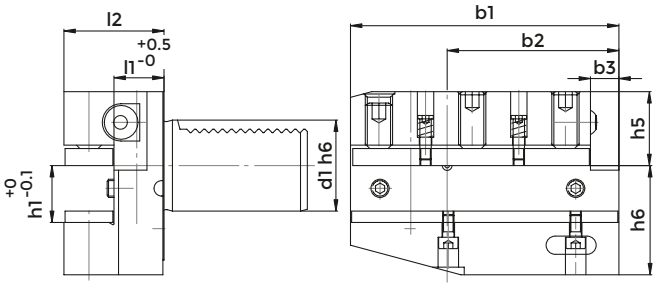

DIN 69880 - B5

COD.	d1	b1	b2	b3	h1	h5	h6	l1	l2
B5-30x20x40	30	100	65	10	20/16	28	38	22	40
B5-40x25x44	40	118	75.5	12.5	25/20	32.5	48	22	44
B5-50x32x55	50	130	80	16	32/25	35	60	30	55
B5-60x32x60	60	145	82.5	16	32/25	42.5	62.5	30	60

Spare parts p. 543

RADIAL HOLDER, LH, LONG

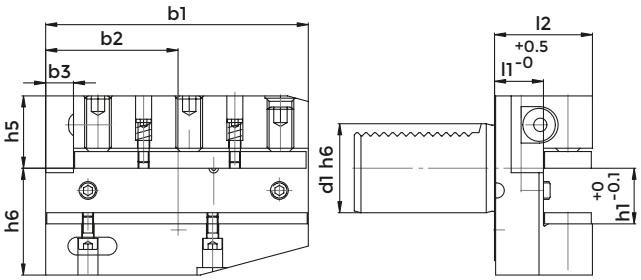

DIN 69880 - B6

COD.	d1	b1	b2	b3	h1	h5	h6	l1	l2
B6-30x20x40	30	100	65	10	20/16	28	38	22	40
B6-40x25x44	40	118	75.5	12.5	25/20	32.5	48	22	44
B6-50x32x55	50	130	80	16	32/25	35	60	30	55
B6-60x32x60	60	145	82.5	16	32/25	42.5	62.5	30	60

Spare parts p. 543

RADIAL HOLDER, UPSIDE-DOWN, RH, LONG

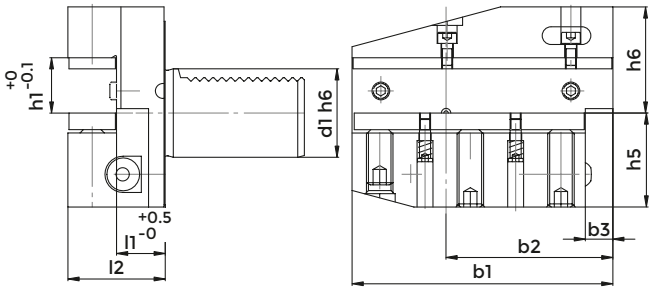

DIN 69880 - B7

COD.	d1	b1	b2	b3	h1	h5	h6	l1	l2
B7-30x20x40	30	100	65	10	20/16	35	38	22	40
B7-40x25x44	40	118	75.5	12.5	25/20	42.5	48	22	44
B7-50x32x55	50	130	80	16	32/25	50	60	30	55

Spare parts p. 543

RADIAL HOLDER, UPSIDE-DOWN, LH, SHORT

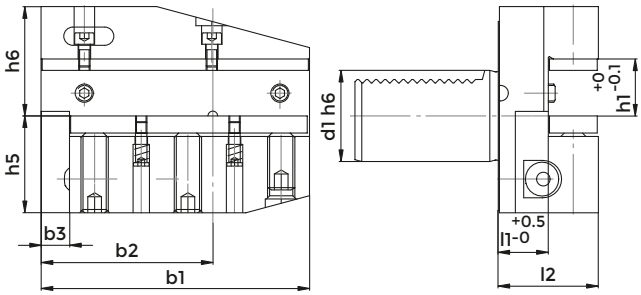

DIN 69880 - B8

COD.	d1	b1	b2	b3	h1	h5	h6	l1	l2
B8-30x20x40	30	100	65	10	20/16	35	38	22	40
B8-40x25x44	40	118	75.5	12.5	25/20	42.5	48	22	44
B8-50x32x55	50	130	80	16	32/25	50	60	30	55

Spare parts p. 543

AXIAL HOLDER, RH

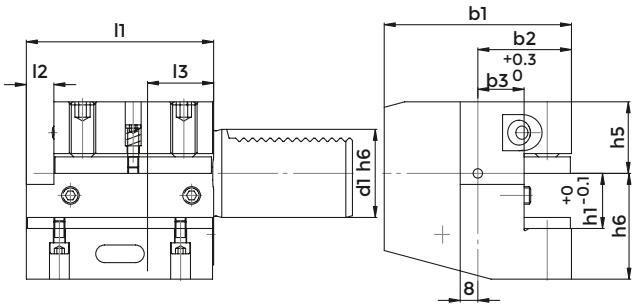

DIN 69880 - C1

COD.	d1	b1	b2	b3	h1	h5	h6	l1	l2	l3
C1-20x16x50	20	65	40	26	16/12	25	30	50	-	30
C1-30x20x70	30	70	35	17	20/16	28	38	70	10	30
C1-40x25x85	40	85	42.5	21	25/20	32.5	48	85	12.5	30
C1-50x32x100	50	100	50	26	32/25	35	60	100	16	40
C1-60x32x125	60	125	62.5	33	32/25	42.5	62.5	125	16	40

Spare parts p. 544

AXIAL HOLDER, RH

IC VERSION

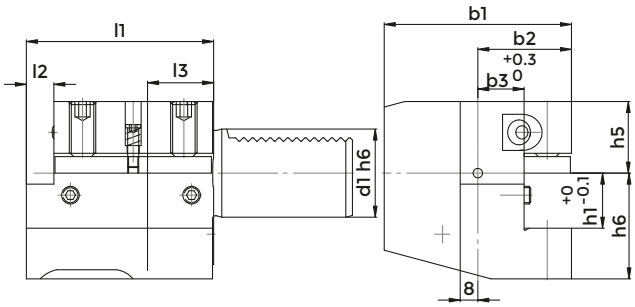

DIN 69880 - C1

COD.	d1	b1	b2	b3	h1	h5	h6	l1	l2	l3
C1-30x20x70-IC	30	70	35	17	20	28	38	70	10	30
C1-40x25x85-IC	40	85	42.5	21	25	32.5	48	85	12.5	30

Spare parts p. 544

AXIAL HOLDER, LH

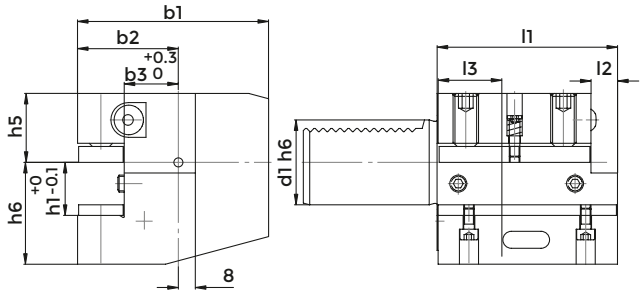

DIN 69880 - C2

COD.	d1	b1	b2	b3	h1	h5	h6	l1	l2	l3
C2-20x16x50	20	65	40	26	16/12	25	30	50	-	30
C2-30x20x70	30	76	41	23	20/16	28	38	70	10	30
C2-40x25x85	40	90	47.5	25.5	25/20	32.5	48	85	12.5	30
C2-50x32x100	50	105	55	30.5	32/25	35	60	100	16	40
C2-60x32x125	60	125	62.5	33	32/25	42.5	62.5	125	16	40

Spare parts p. 544

AXIAL HOLDER, LH

IC VERSION

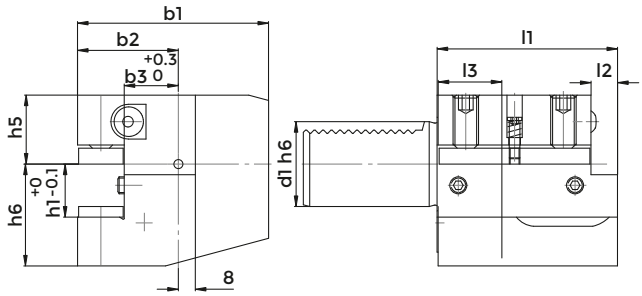

DIN 69880 - C2

COD.	d1	b1	b2	b3	h1	h5	h6	l1	l2	l3
C2-30x20x70-IC	30	76	41	23	20	28	38	70	10	30
C2-40x25x85-IC	40	90	47.5	25.5	25	32.5	48	85	12.5	30

Spare parts p. 544

AXIAL HOLDER, UPSIDE-DOWN, RH

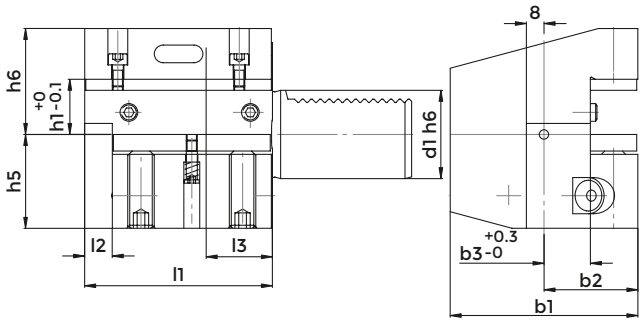

DIN 69880 - C3

COD.	d1	b1	b2	b3	h1	h5	h6	l1	l2	l3
C3-30x20x70	30	70	35	17	20/16	35	38	70	10	30
C3-40x25x85	40	85	42.5	21	25/20	42.5	48	85	12.5	30
C3-50x32x100	50	100	50	26	32/25	50	60	100	16	40
C3-60x32x125	60	125	62.5	33	32/25	62.5	62.5	125	16	40

Spare parts p. 544

AXIAL HOLDER, UPSIDE-DOWN, RH

IC VERSION

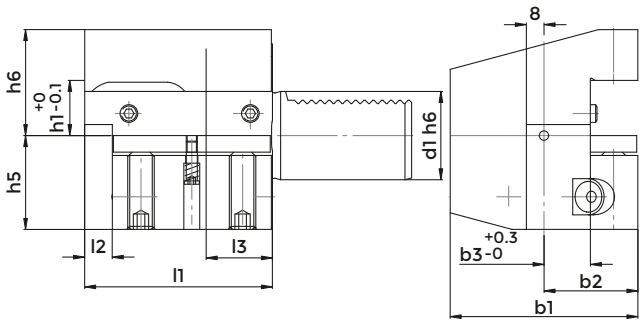

DIN 69880 - C3

COD.	d1	b1	b2	b3	h1	h5	h6	l1	l2	l3
C3-30x20x70-IC	30	70	35	17	20	35	38	70	10	30
C3-40x25x85-IC	40	85	42.5	21	25	42.5	48	85	12.5	30

Spare parts p. 544

AXIAL HOLDER, UPSIDE-DOWN LH

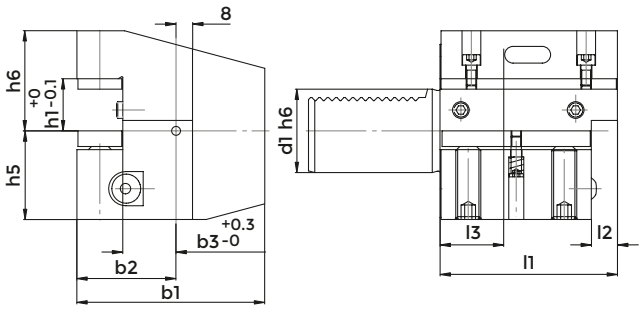

DIN 69880 - C4

COD.	d1	b1	b2	b3	h1	h5	h6	l1	l2	l3
C4-30x20x70	30	76	41	23	20/16	35	38	70	10	30
C4-40x25x85	40	90	47.5	25.5	25/20	42.5	48	85	12.5	30
C4-50x32x100	50	105	55	30.5	32/25	50	60	100	16	40

Spare parts p. 544

AXIAL HOLDER, UPSIDE-DOWN LH

IC VERSION

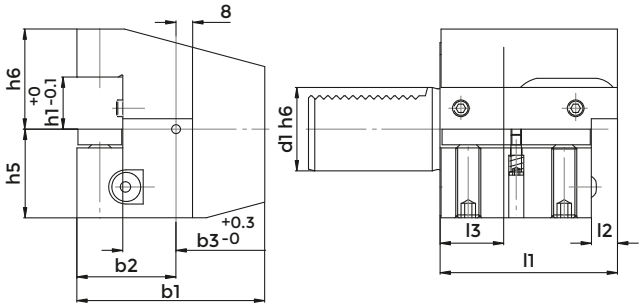

DIN 69880 - C4

COD.	d1	b1	b2	b3	h1	h5	h6	l1	l2	l3
C4-30x20x70-IC	30	76	41	23	20	35	38	70	10	30
C4-40x25x85-IC	40	90	47.5	25.5	25	42.5	48	85	12.5	30

Spare parts p. 544

TOOLHOLDER WITH MULTIPLE SEATS

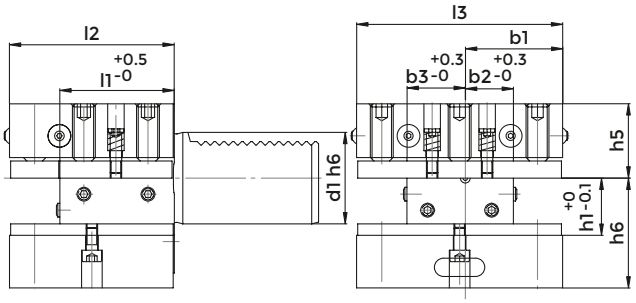

DIN 69880 - D1

COD.	d1	b1	b2	b3	h1	h5	h6	l1	l2	l3
D1-30X20X60	30	35	17	23	20/16	28	38	42	60	76
D1-40X25X72	40	42.5	21	25.5	25/20	32.5	48	50	72	90
D1-50X32X85	50	50	26	30.5	32/25	35	60	60	85	105
D1-60X32X110	60	57.5	33	33	32/25	42.5	62.5	85	110	115

Spare parts p. 545

TOOLHOLDER WITH MULTIPLE SEATS UPSIDE DOWN

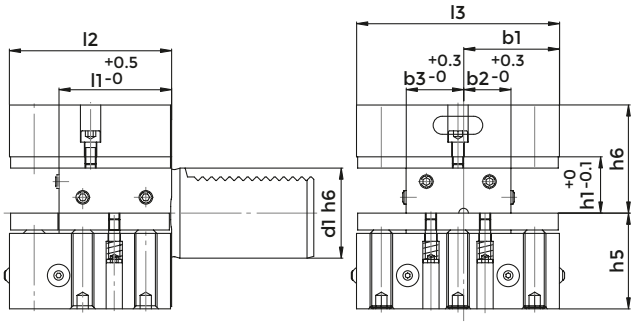

DIN 69880 - D2

COD.	d1	b1	b2	b3	h1	h5	h6	l1	l2	l3
D2-30x20x60	30	35	17	23	20/16	35	38	42	60	76
D2-40x25x72	40	42.5	21	25.5	25/20	42.5	48	50	72	90
D2-50x32x85	50	50	26	30.5	32/25	50	60	60	85	105

Spare parts p. 545

HOLDER FOR INDEXABLE INSERT DRILLS WITH INTERNAL COOLANT SUPPLY

TYPE E1

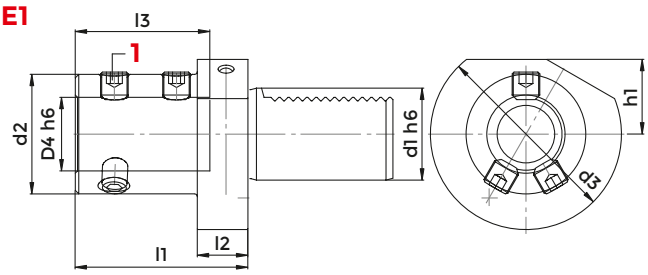

TYPE E1WN

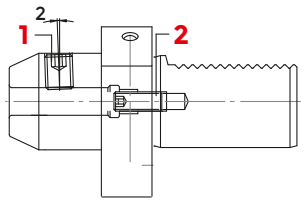

DIN 69880 - E1

COD.	d1	d2	d3	D4	h1	l1	l2	l3	1 SCREW
E1-20x16	20	36	50	16	-	67	18	54	811-402003
E1-20x25	20	45	50	25	-	71	18	58	811-402005
E1-30x08-WN	30	28	68	8	28	50	22	36	811-106002
E1-30x10-WN	30	35	68	10	28	54	22	40	811-106004
E1-30x12-WN	30	42	68	12	28	59	22	45	811-106005
E1-30x16	30	36	68	16	28	67	22	54	811-402003
E1-30x20	30	40	68	20	28	67	22	54	811-402003
E1-30x25	30	45	68	25	28	71	22	58	811-402005
E1-30x32	30	52	68	32	28	75	22	61	811-402005
E1-30x40	30	65	68	40	28	90	22	72	811-402007
E1-40x10-WN	40	35	83	10	32.5	54	22	40	811-106004
E1-40x12-WN	40	42	83	12	32.5	58	22	45	811-106005
E1-40x16	40	36	83	16	32.5	67	22	54	811-402003
E1-40x20	40	40	83	20	32.5	67	22	54	811-402003
E1-40x25	40	45	83	25	32.5	75	22	59	811-402005
E1-40x32	40	52	83	32	32.5	75	22	61	811-402005
E1-40x40	40	65	83	40	32.5	90	22	73	811-402007
E1-40x50	40	70	83	50	32.5	100	22	83	811-402007
E1-50x20	50	40	98	20	35	80	30	54	811-402003
E1-50x25	50	45	98	25	35	80	30	59	811-402005
E1-50x32	50	52	98	32	35	80	30	63	811-402005
E1-50x40	50	65	98	40	35	90	30	73	811-402007
E1-50x50	50	75	98	50	35	100	30	83	811-402007
E1-60x32	60	52	123	32	42,5	80	30	63	811-402005
E1-60x40	60	65	123	40	42.5	90	30	73	811-402007
E1-60x50	60	75	123	50	42.5	100	30	83	811-402007

BORING BAR HOLDER

TYPE A

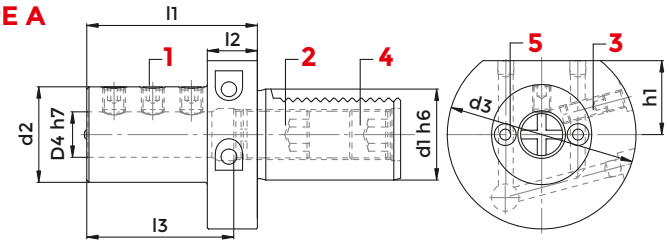

TYPE B

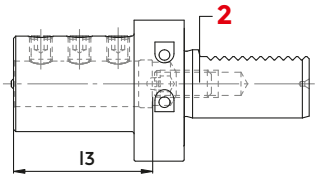

DIN 69880 - E2

COD.	d1	d2	d3	D4	h1	l1	l2	l3	T	1 SCREW	2 S7OP SCREW	3 SCREW	4 SCREW	5 COOLANT NOOSE
E2-16x06	16	32	40	6	18	44	13	34	B	811-102020	811-102014	811-102011	-	833-001280
E2-16x08	16	32	40	8	18	44	13	34	B	811-102020	811-102021	811-102011	-	833-001280
E2-16x10	16	32	40	10	18	44	13	34	B	811-102020	811-102021	811-102011	-	833-001280
E2-16x12	16	40	40	12	18	44	13	34	B	811-102028	811-402065	811-102011	-	833-001280
E2-16x16	16	40	40	16	18	44	13	34	B	811-102028	811-402065	811-102011	-	833-001280
E2-20x06	20	40	50	6	23	50	18	42	B	811-102021	811-102015	-	-	833-001080
E2-20x08	20	40	50	8	23	50	18	42	B	811-102021	811-102023	-	-	833-001080
E2-20x10	20	40	50	10	23	50	18	42	B	811-102029	811-102023	-	-	833-001080
E2-20x12	20	40	50	12	23	50	18	42	B	811-102029	811-402066	-	-	833-001080
E2-20x16	20	42	50	16	23	50	18	42	B	811-102028	811-402066	-	-	833-001080
E2-20x20	20	49	50	20	23	50	18	42	B	811-102028	811-402066	-	-	833-001080
E2-20x25	20	49	50	25	23	60	18	52	B	811-102027	811-402066	-	-	833-001080
E2-30x06	30	55	68	6	28	60	22	43	A	811-102022	811-402030	811-102029	811-102070	833-001080
E2-30x08	30	55	68	8	28	60	22	43	A	811-102022	811-402030	811-102029	811-102070	833-001080
E2-30x10	30	55	68	10	28	60	22	43	A	811-102022	811-402030	811-102029	811-102070	833-001080
E2-30x12	30	55	68	12	28	60	22	43	A	811-102030	811-402030	811-102029	811-102070	833-001080
E2-30x16	30	55	68	16	28	60	22	55	A	811-102030	811-402071	811-102029	811-402072	833-001080
E2-30x20	30	55	68	20	28	60	22	54	B	811-102029	811-402028	811-102029	-	833-001080
E2-30x25	30	55	68	25	28	60	22	54	B	811-102029	811-402028	811-102029	-	833-001080
E2-30x32	30	67	68	32	28	75	22	61	B	811-102029	811-402029	811-102029	-	833-001080
E2-30x40	30	67	68	40	28	75	22	66	B	811-102029	811-402029	811-102019	-	833-001080
E2-40x06	40	55	83	6	32.5	75	22	43	A	811-102022	811-402030	811-102029	811-102070	833-001080
E2-40x08	40	55	83	8	32.5	75	22	43	A	811-102030	811-402030	811-102029	811-102070	833-001080
E2-40x10	40	55	83	10	32.5	75	22	43	A	811-102030	811-402030	811-102029	811-102070	833-001080
E2-40x12	40	55	83	12	32.5	75	22	58	A	811-102030	811-402030	811-102029	811-102070	833-001080
E2-40x16	40	55	83	16	32.5	75	22	61	A	811-102038	811-402071	811-102029	811-402072	833-001080
E2-40x20	40	55	83	20	32.5	75	22	61	A	811-102037	811-402064	811-102029	811-402073	833-001080

follows >>

BORING BAR HOLDER

TYPE A

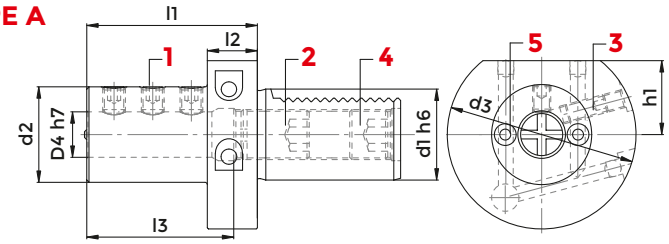

TYPE B

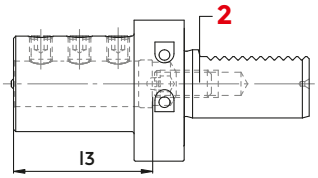

DIN 69880 - E2

COD.	d1	d2	d3	D4	h1	l1	l2	l3	T	1 SCREW	2 STOP SCREW	3 SCREW	4 SCREW	5 COOLANT NOOSE
E2-40x25	40	55	83	25	32.5	75	22	61	B	811-102038	811-402028	811-102029	-	833-001080
E2-40x30	40	82	83	30	32.5	75	22	61	B	811-102037	811-402029	811-102029	-	833-001080
E2-40x32	40	82	83	32	32.5	75	22	61	B	811-102038	811-402029	811-102029	-	833-001080
E2-40x40	40	82	83	40	32.5	90	22	76	B	811-102037	811-402029	811-102029	-	833-001080
E2-40x50	40	98	98	50	35	100	-	86	B	811-102064	811-402028	811-102029	-	833-001080
E2-50x12	50	68	98	12	35	90	30	71	A	811-102031	811-402030	811-102029	811-102070	833-001080
E2-50x16	50	68	98	16	35	90	30	76	A	811-102039	811-402071	811-102029	811-402072	833-001080
E2-50x20	50	68	98	20	35	90	30	76	A	811-102045	811-402064	811-102029	811-402073	833-001080
E2-50x25	50	68	98	25	35	90	30	76	A	811-102045	811-402074	811-102029	811-402075	833-001080
E2-50x32	50	69	98	32	35	90	30	76	B	811-102044	811-402028	811-102029	-	833-001080
E2-50x40	50	98	98	40	35	90	-	76	B	811-102043	811-402028	811-102029	-	833-001080
E2-50x50	50	98	98	50	35	100	-	86	B	811-102064	811-402028	811-102029	-	833-001080
E2-60x16	60	68	123	16	42.5	90	30	76	A	811-102039	811-402071	811-102030	811-402072	833-001080
E2-60x20	60	68	123	20	42.5	90	30	76	A	811-102045	811-402064	811-102030	811-402073	833-001080
E2-60x25	60	68	123	25	42.5	90	30	76	A	811-102045	811-402074	811-102030	811-402075	833-001080
E2-60x32	60	68	123	32	42.5	90	30	76	A	811-102044	811-402076	811-102030	811-402077	833-001080
E2-60x40	60	98	123	40	42.5	90	30	76	B	811-102044	811-402029	811-102030	-	833-001080
E2-60x50	60	98	123	50	42.5	100	30	86	B	811-102043	811-402029	811-102030	-	833-001080

THERE ARE TWO KINDS OF TOOLHOLDERS:

a) The VDI- shank is completely drilled. The tool can be positioned through the shank without having to cut it, in case it is too long for machining.

b) The VDI- shank is not drilled and has only one adjusting screw at the end of the hole where the tool is placed.

ACCESSORIES

p. 690

BORING BAR HOLDER

TYPE A

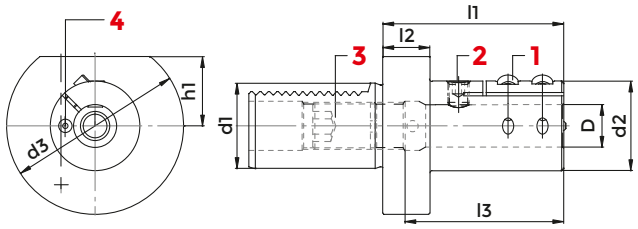

TYPE B

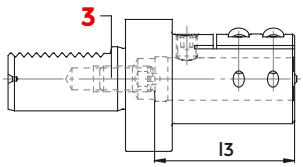

DIN 69880 - E2-TAG

COD.	d1	d2	d3	D	h1	l1	l2	l3	T	1 SCREW	2 SCREW	3 STOP SCREW	4 COOLANT NOOSE
E2-30x06-TAG	30	32	68	6	28	75	22	65	A	811-101028	811-102020	811-402030	833-001280
E2-30x08-TAG	30	34	68	8	28	75	22	65	A	811-101028	811-102020	811-402030	833-001280
E2-30x10-TAG	30	38	68	10	28	75	22	65	A	811-101028	811-102028	811-402030	833-001280
E2-30x12-TAG	30	38	68	12	28	75	22	65	A	811-101028	811-102028	811-402030	833-001280
E2-30x16-TAG	30	42	68	16	28	75	22	70	A	811-101028	811-102036	811-402071	833-001060
E2-30x20-TAG	30	42	68	20	28	75	22	66	B	811-101028	811-102036	811-402028	833-001060
E2-30x25-TAG	30	48	68	25	28	75	22	66	B	811-101028	811-102036	811-402028	833-001060
E2-30x32-TAG	30	56	68	32	28	75	22	65	B	811-101029	811-102036	811-402028	833-001070
E2-40x08-TAG	40	34	83	8	32,5	75	22	65	A	811-101028	811-102020	811-402030	833-001080
E2-40x10-TAG	40	38	83	10	32,5	75	22	65	A	811-101028	811-102028	811-402030	833-001080
E2-40x12-TAG	40	38	83	12	32,5	75	22	65	A	811-101028	811-102028	811-402030	833-001080
E2-40x16-TAG	40	42	83	16	32,5	75	22	68	A	811-101028	811-102036	811-402064	833-001060
E2-40x20-TAG	40	42	83	20	32,5	85	22	80	A	811-101028	811-102036	811-402064	833-001060
E2-40x25-TAG	40	48	83	25	32,5	85	22	76	B	811-101028	811-102036	811-402028	833-001060
E2-40x32-TAG	40	56	83	32	32,5	85	22	76	B	811-101029	811-102036	811-402028	833-001070
E2-40x40-TAG	40	65	83	40	32,5	97	22	90	B	811-101029	811-102069	811-402029	833-001070
E2-50x32-TAG	50	56	98	32	35	98	30	90	B	811-101029	811-102036	811-402029	833-001070
E2-50x40-TAG	50	65	98	40	35	115	30	105	B	811-101029	811-102069	811-402029	833-001070
E2-50x50-TAG	50	76	98	50	35	125	30	112	B	811-101030	811-102069	811-402029	833-001070

TECHNICAL FEATURES

1. Particularly suitable for vibration-damping- boring bars with HM-shank.
2. The particular elastic gripping allows a uniform tool-clamping and reduces vibrations when the tool is working with big projections.
3. Fixing occurs by two screws. A third screw, which is perpendicular to the tool, positions the tool itself, resting on the face, on the boring bar shank.
4. For completely cylindrical tools there is a reference mark engraved on the front side of the toolholder. It is useful to position the tool.
5. There are two kinds of toolholders:
   a) The VDI- shank is completely drilled. The tool can be positioned through the shank without having to cut it, in case it is too long for machining.
   b) The VDI- shank is not drilled and has only one adjusting screw at the end of the hole where the tool is placed.

COLLET CHUCK FOR COLLETS ACCORDING TO DIN 6499/B, ER TYPE

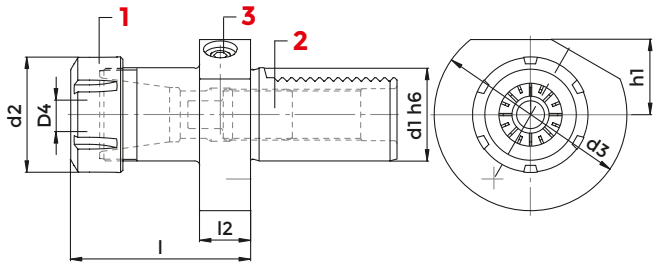

DIN 69880 - E4

COD.	DESCRIPTION	d1	d2	d3	D4	h1	l1	l2	1 NUT	2 SCREW	3 SCREW
E4-16x16	VDI16.L34.ER16	16	32	40	1-10	18	34	13	812-203005	811-303001	811-302106
E4-16x20	VDI16.L44.ER20	16	35	40	1-13	18	44	13	812-203006	811-303001	811-302106
E4-20x20	VDI20.L59.ER20	20	35	50	1-13	-	59	18	812-203006	811-303001	811-302106
E4-20x25	VDI20.L65.ER25	20	42	50	2-16	-	65	18	812-203001	811-303001	811-302106
E4-20x32	VDI20.L67.ER32	20	50	50	2-20	-	67	18	812-203002	811-303001	811-302106
E4-30x16	VDI30.L48.ER16	30	32	68	1-10	28	48	22	812-203005	811-303001	811-302106
E4-30x20	VDI30.L59.ER20	30	35	68	1-13	28	59	22	812-203006	811-303014	811-302106
E4-30x25	VDI30.L57.ER25	30	42	68	2-16	28	57	22	812-203001	811-303014	811-302106
E4-30x32	VDI30.L78.ER32	30	50	68	2-20	28	78	22	812-203002	811-303014	811-302106
E4-30x40	VDI30.L80.ER40	30	63	68	3-30	28	80	22	812-203003	811-303014	811-302106
E4-40x20	VDI40.L59.ER20	40	35	83	1-13	32.5	59	22	812-203006	811-303003	811-302106
E4-40x25	VDI40.L57.ER25	40	42	83	2-16	32.5	57	22	812-203001	811-303003	811-302106
E4-40x32	VDI40.L78.ER32	40	50	83	2-20	32.5	78	22	812-203002	811-303004	811-302106
E4-40x40	VDI40.L80.ER40	40	63	83	3-30	32.5	80	22	812-203003	811-303004	811-302106
E4-50x32	VDI50.L92.ER32	50	50	98	2-20	35	92	30	812-203002	811-303004	811-302106
E4-50x40	VDI50.L80.ER40	50	63	98	3-30	35	80	30	812-203003	811-303004	811-302106
E4-60x32	VDI60.L78.ER32	60	50	123	2-20	42.5	78	30	812-203002	811-303004	811-302106
E4-60x40	VDI60.L80.ER40	60	63	123	3-30	42.5	80	30	812-203003	811-303004	811-302106

Coolant supply unit 1/8'' G not included

ACCESSORIES

p. 649

p. 631

COLLET CHUCK FOR COLLETS ACCORDING TO DIN 6388, EOC TYPE

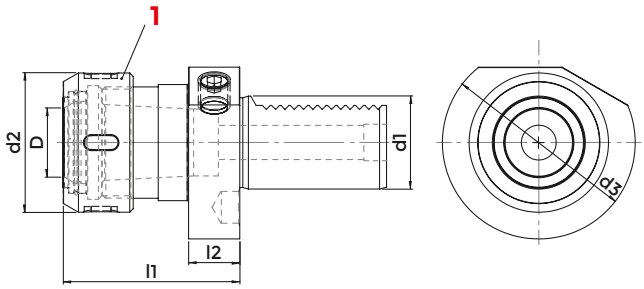

DIN 69880 - E3

COD.	DESCRIPTION	d1	d2	d3	D	l1	l2	1 NUT
E3-40X25	VDI.L75.EOC25	40	60	83	2-25	75	22	GOC25
E3-40X32	VDI.L90.EOC32	40	72	83	3-32	90	22	GOC32

Coolant supply unit 1/8" G not included

ACCESSORIES

p. 706

DOUBLE BORING BAR HOLDER, RIGHT

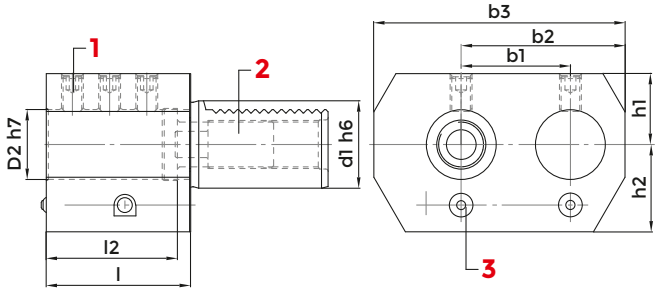

DIN 69880 - E7

COD.	d1	D2	h1	h2	L1	L2	b1	b2	B3	1 SCREW	2 STOP SCREW	3 COOLANT NOSE
E7-30x25	30	25	28	32	56	52	45	65	95	811-102029	811-303003	833-001080
E7-40x32	40	32	32.5	40	66	60	50	75	115	811-102037	811-303004	833-001100
E7-50x50	50	50	35	49	90	80	68	103	152	811-102064	811-303005	833-001080

ACCESSORIES

p. 690

DOUBLE BORING BAR HOLDER, LEFT

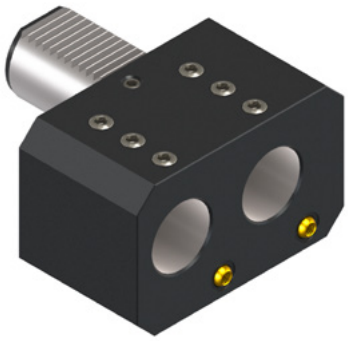

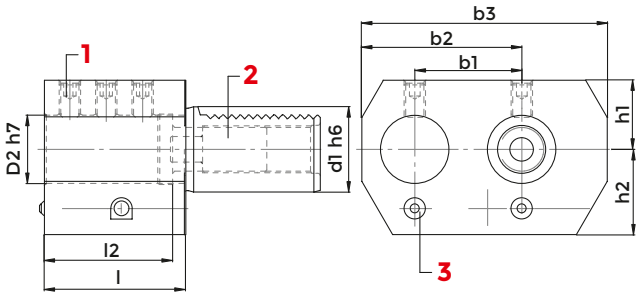

DIN 69880 - E8

COD.	d1	D2	h1	h2	L1	L2	b1	b2	B3	1 SCREW	2 STOP SCREW	3 COOLANT NOSE
E8-30x25	30	25	28	32	56	52	45	65	95	811-102029	811-303003	833-001080
E8-40x32	40	32	32.5	40	66	60	50	75	115	811-102037	811-303004	833-001100
E8-50x50	50	50	35	49	90	80	68	103	152	811-102064	811-303005	833-001080

ACCESSORIES

p. 690

MORSE TAPER HOLDER

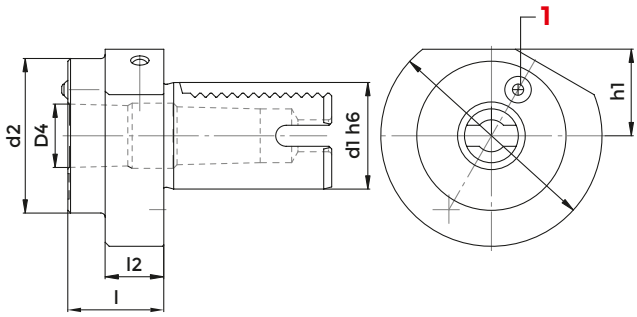

DIN 69880 - F

COD.	d1	d2	d3	MK	D4	h1	l1	l2	1 COOLANT NOSE
F30-MKD1	30	-	68	1	12.065	28	27	-	833-001100
F30-MKD2	30	55	68	2	17.780	28	36	27	833-001100
F30-MKD3	30	55	68	3	23.825	28	66	41	833-001100
F40-MKD1	40	55	83	1	12.065	32.5	23	22	833-001100
F40-MKD2	40	55	83	2	17.780	32.5	36	22	833-001100
F40-MKD3	40	58	83	3	23.825	32.5	36	22	833-001100
F40-MKD4	40	68	83	4	31.267	32.5	80	22	833-001100
F50-MKD3	50	58	98	3	23.825	35	45	30	833-001100
F50-MKD4	50	68	98	4	31.267	35	55	30	833-001100
*F50-MKD5	50	75	98	5	44.399	35	72	30	833-001100

* without VDI shank

ACCESSORIES

p. 691

p. 722

ROTARY ADJUSTABLE BAR-STOP

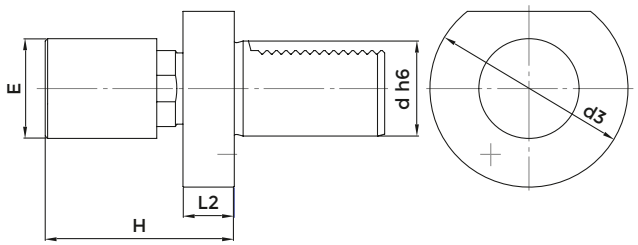

DIN 69880

COD.	DESCRIPTION	d	h	d3	L2	E
MW3042	BS 1 - 30 x 42	30	68 - 100	68	16	42
MW4042	BS 1 - 40 x 42	40	74 - 100	83	22	42

DAMPED, ADJUSTABLE, BAR STOP

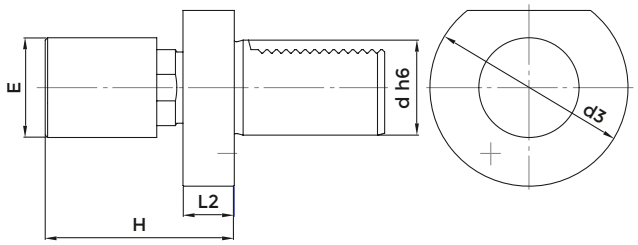

DIN 69880

COD.	DESCRIPTION	d	h	d3	L2	E
MW-2042-AM	BS 2 - 20 x 42	20	82 - 95	50	30	42
MW-3042-AM	BS 2 - 30 x 42	30	68 - 100	68	16	42
MW-3056-AM	BS 2 - 30 x 56	30	68 - 100	68	16	56
MW-4042-AM	BS 2 - 40 x 42	40	74 - 100	83	22	42
MW-4056-AM	BS 2 - 40 x 56	40	74 - 100	83	22	56

ADAPTORS FOR DRILLS WITH INTERNAL COOLANT SUPPLY

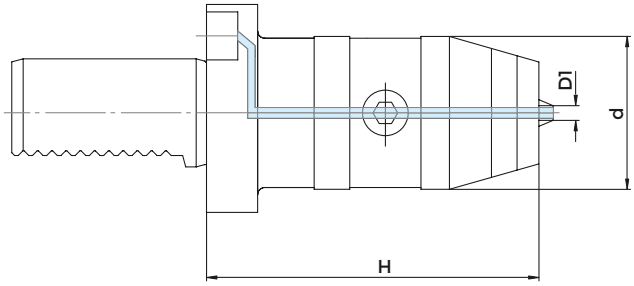

DIN 69880 - KS1

COD.	DESCRIPTION	H	d	CLAMPING CAPACITY
KS1-30-13	VDI30x55 0,5-13	90	50	0,5-13
KS1-30-16	VDI30x55 2,5-16	90	50	2,5-16
KS1-40-13	VDI40x63 0,5-13	90	50	0,5-13
KS1-40-16	VDI40x63 2,5-16	90	50	2,5-16

ADAPTORS FOR DRILLS WITH LATERAL COOLANT SUPPLY

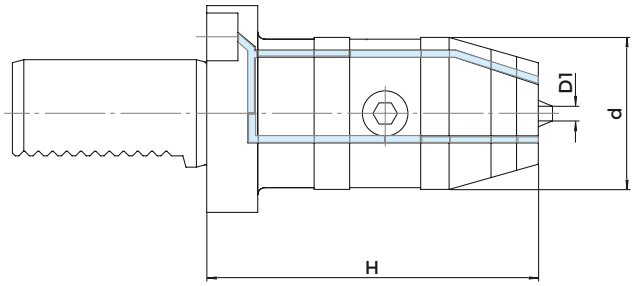

DIN 69880 - KS2

COD.	DESCRIPTION	H	d	CLAMPING CAPACITY
KS2-30-16	VDI30x55 2,5-16	82	57	2,5-16
KS2-40-13	VDI40x63 0,5-13	85	57	0,5-13
KS2-40-16	VDI40x63 2,5-16	85	57	2,5-16

SPRING BAR PULLER

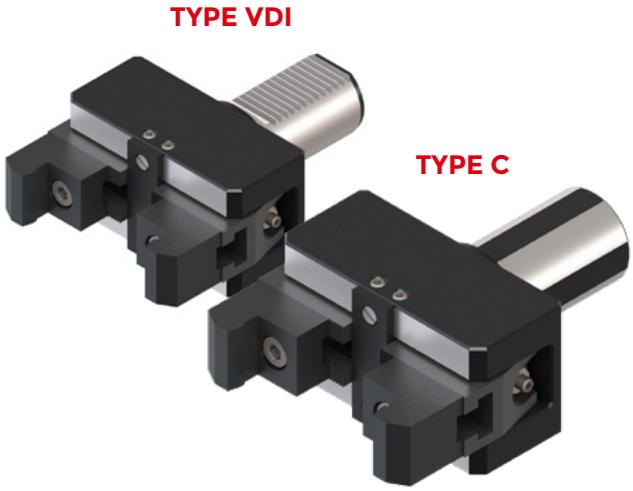

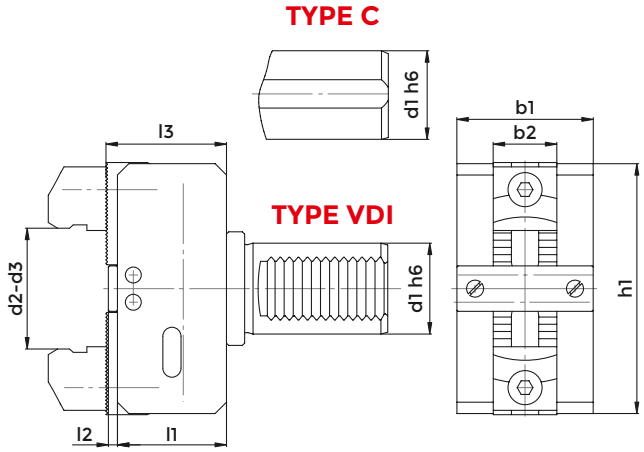

DIN 69880 - HK1

COD.	TYPE	d1	d2 (short)	d3 (long)	b1	b2	h1	l1	l2	l3
H120K	VDI	20	6-56	-	50	28	72	46	4	51
H125KC	C	25	6-56	54-110	50	28	72	46	4	51
H130K	VDI	30	6-56	54-110	50	28	72	46	4	51
H132KC	C	32	6-56	54-110	50	28	72	46	4	51
H140K	VDI	40	6-66	54-110	60	28	110	48	4	53
H140KC	C	40	6-66	54-110	60	28	110	48	4	53
H150KC	C	50	10-75	62-125	65	28	130	67	5	73

Spare parts p. 545

OPERATING MANUAL FOR BAR PULLER

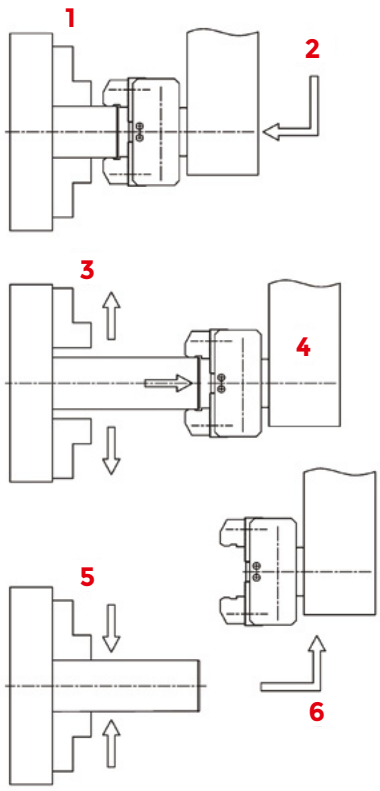

1. The self-centering chuck stops.
2. Set-up the jaws 3-5mm less than the measure of the bar diameter
3. The self-centering chuck opens
4. The bar puller pulls the bar because the jaws are normally closed by an internal spring.
5. The self-centering chuck closes
6. The bar puller slides out of the previously locked diameter

TENSION AND COMPRESSION TAPPING HEAD

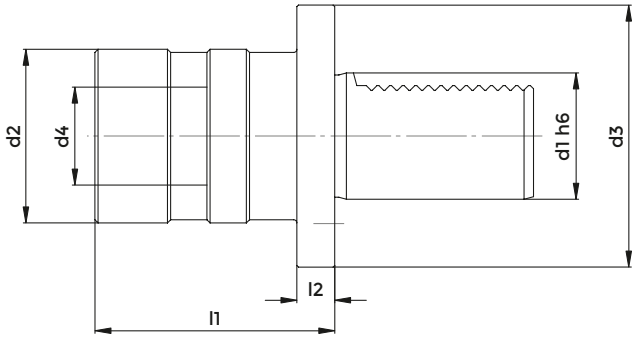

DIN 69880 - M

COD.	d1	TAP RANGE	SIZE	RANGE	d2	d3	d4	l1	l2
M2710	20	M3-M12	1	- 9 + 9	38	50	19	55	12
M2720	30	M3-M12	1	- 9 + 9	38	68	19	55	12
M2730	40	M3-M12	1	- 9 + 9	38	83	19	55	12
M2820	30	M6-M20	2	- 15 + 15	55	68	31	77	12
M2830	40	M6-M20	2	- 15 + 15	55	83	31	77	12
M2930	40	M14-M33	3	- 24 + 24	79	83	48	110	12
M2840	50	M6 - M 20	2	- 15 + 15	55	83	31	77	12

TOOLHOLDER FOR CUT OFF TOOLS ADJUSTABLE IN HEIGHT, RIGHT

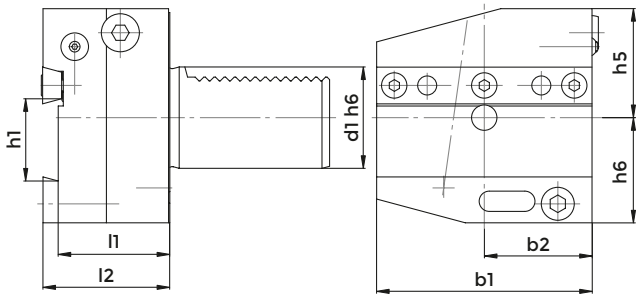

DIN 69880 - AR

COD.	d1	b1	b2	h1	h5	h6	l1	l2
AR3026	30	70	35	26	32	39	44	50
AR4026	40	85	42.5	26	43	41.5	44	50
AR4032	40	85	42.5	32	43	41.5	44	50
AR5032	50	100	50	32	43	45	44	50

Spare parts p. 547

TOOLHOLDER FOR CUT OFF TOOLS ADJUSTABLE IN HEIGHT, RIGHT

IC VERSION

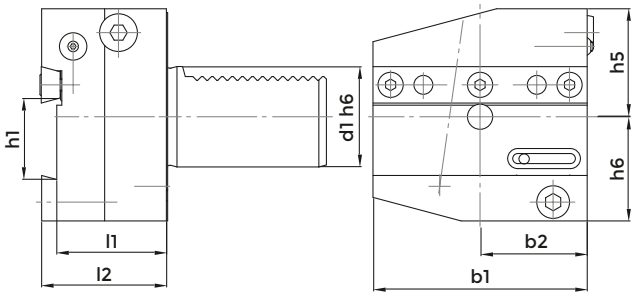

DIN 69880 - AR

COD.	d1	b1	b2	h1	h5	h6	l1	l2
AR3026-IC	30	70	35	26	32	39	44	50
AR4026-IC	40	85	42.5	26	43	41.5	44	50
AR4032-IC	40	85	42.5	32	43	41.5	44	50

Spare parts p. 547

TOOLHOLDER FOR CUT OFF TOOLS ADJUSTABLE IN HEIGHT, UPSIDE-DOWN, LEFT

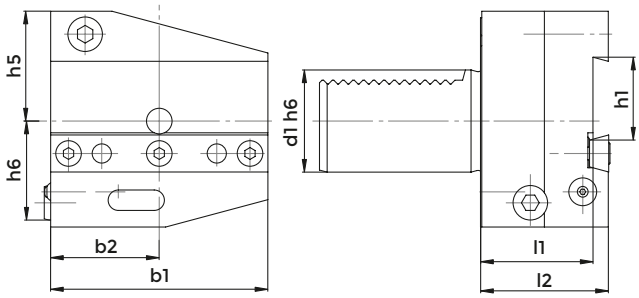

DIN 69880 - ALU

COD.	d1	b1	b2	h1	h5	h6	l1	l2
ALU4032	40	85	42.5	32	43	41.5	44	50

Spare parts p. 547

TOOLHOLDER FOR CUT OFF TOOLS ADJUSTABLE IN HEIGHT, LEFT

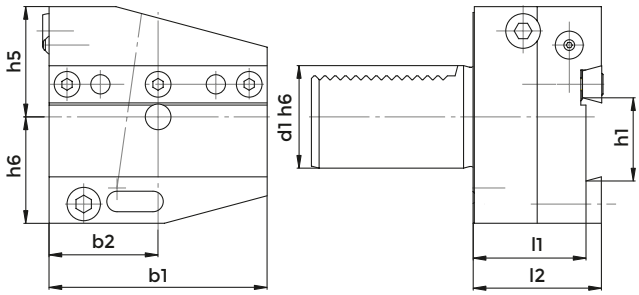

DIN 69880 - AL

COD.	d1	b1	b2	h1	h5	h6	l1	l2
AL3026	30	70	35	26	32	39	44	50
AL4032	40	85	42.5	32	43	41.5	44	50

Spare parts p. 547

TOOLHOLDER FOR CUT OFF TOOLS ADJUSTABLE IN HEIGHT, LEFT

IC VERSION

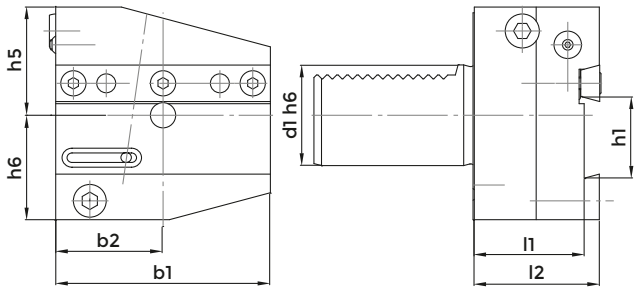

DIN 69880 - AL

COD.	d1	b1	b2	h1	h5	h6	l1	l2
AL4032-IC	40	85	42.5	32	43	41.5	44	50

Spare parts p. 547

TOOLHOLDER FOR CUT OFF TOOLS ADJUSTABLE IN HEIGHT, UPSIDE-DOWN, RIGHT

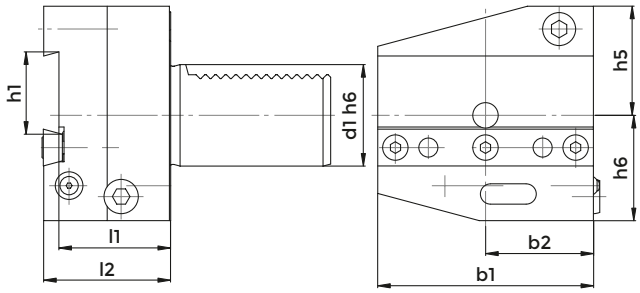

DIN 69880 - ARU

COD.	d1	b1	b2	h1	h5	h6	l1	l2
ARU3026	30	70	35	26	38	35	44	50
ARU4032	40	85	42.5	32	43	41.5	44	50

Spare parts p. 547

BROACH TOOLHOLDER

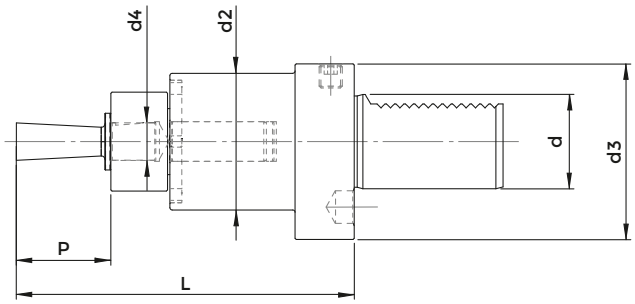

DIN 69880

COD.	DESCRIPTION	d4	P	d	d2	d3	L
9319	VDI 20 - G12	12	25	20	44	50	57
9320	VDI 30 - G12	12	25	30	58	68	83
9321	VDI 30 - G16	16	40	30	58	68	83
9322	VDI 40 - G12	12	25	40	58	83	83
9323	VDI 40 - G16	16	40	40	58	83	83

Spare parts p. 547

KIT VDI TOOL HOLDERS

COD.	CONTENUTO DEL KIT
KIT VDI 30DX The same Kit can be supplied with LEFT radial and axial toolders with code n° KIT VDI 30SX	N°4 turning RH short (B1) N°1 turning RH overhead (B3) N°1 axial holder RH (C1) N°1 insert drill holder Ø20 (E1) N°1 boring bar holder Ø25 (E2) N°1 boring bar holder Ø20 (E2) N°1 boring bar holder Ø16 (E2) N°2 collet chucks ER32 (E4) N°1 reduction Ø25-10 N°1 reduction Ø25-12 N°10 collets ER32 (Ø3 4 6 8 10 12 14 16 18 20) N°1 wrench ER32

TOOLHOLDERS KIT

COD.	CONTENUTO DEL KIT
KIT VDI 40DX The same Kit can be supplied with LEFT radial and axial toolders with code n° KIT VDI 40SX	N°4 turning RH short (B1) N°1 turning RH overhead (B3) N°1 axial holder RH (C1) N°1 insert drill holder Ø32 (E1) N°1 boring bar holder Ø16 (E2) N°1 boring bar holder Ø25 (E2) N°1 boring bar holder Ø32 (E2) N°2 collet chucks ER32 (E4) N°1 reduction Ø32-12 N°1 reduction Ø32-20 N°1 reduction MT3 N°10 collets ER32 (Ø3 4 6 8 10 12 14 16 18 20) N°1 wrench ER32

SPARE PARTS

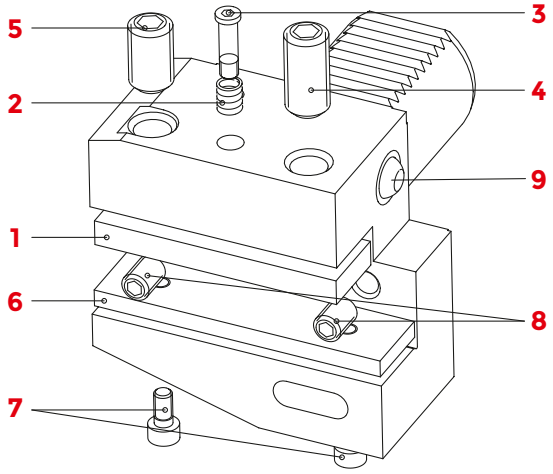

DIN 69880 - B1 - B2 - B3 - B4

	1	2	3	4	5	6	7	8	9
COD.	TOOL CLAMP PLATE	SPRING	SCREW	STOP SCREW	LOCKING SCREW SHORT	SHIM PLATE	SCREW	SCREW	COOLANT NOOSE
B1- 16x12x24	832-002084	824-101010	811-302009	811-102020	811-102019	-	-	811-102020	833-001060
B3-16X12X24	832-002084	824-101010	811-302009	811-102020	811-102019	-	-	811-102020	833-001060
B1-20x16x30	832-002003	824-101010	811-302004	811-102030	811-102029	832-003003	811-101016	811-102020	833-001100
B2 20x16x30	832-002003	824-101010	811-302004	811-102030	811-102029	832-003003	811-101016	811-102020	833-001100
B3-20X16X30	832-002003	824-101010	811-302004	811-102030	811-102029	832-003003	811-101016	811-102020	833-001100
B3-20X16X40	832-002003	824-101010	811-302004	811-102030	811-102029	832-003003	811-101016	811-102020	833-001100
B1-30x20x40	832-002012	824-101010	811-302004	811-102044	811-102043	832-003007	811-101016	811-102028	833-001120
B1-30X20X40-IC	832-002012	824-101010	811-302004	811-102044	811-102043	-	-	811-102028	833-001120
B1-30x20x60	832-002012	824-101010	811-302004	811-102044	811-102043	832-003007	811-101016	811-102028	833-001120
B2-30x20x40	832-002012	824-101010	811-302004	811-102044	811-102043	832-003007	811-101016	811-102028	833-001120
B2-30X20X40-IC	832-002012	824-101010	811-302004	811-102044	811-102043	-	-	811-102028	833-001120
B2-30x20x60	832-002012	824-101010	811-302004	811-102044	811-102043	832-003007	811-101016	811-102028	833-001120
B3-30x20x40	832-002012	824-101010	811-302004	811-102045	811-102044	832-003007	811-101016	811-102028	833-001120
B3-30X20X40-IC	832-002012	824-101010	811-302004	811-102045	811-102044	-	-	811-102028	833-001120
B4-30x20x40	832-002012	824-101010	811-302004	811-102045	811-102044	832-003007	811-101016	811-102028	833-001120
B4-30X20X40-IC	832-002012	824-101010	811-302004	811-102045	811-102044	-	-	811-102028	833-001120
B1-40x25x44	832-002019	824-101010	811-302004	811-102045	811-102044	832-003012	811-101016	811-102028	833-001120
B1-40X25X44-IC	832-002019	824-101010	811-302004	811-102045	811-102044	-	-	811-102028	833-001120
B2-40x25x44	832-002019	824-101010	811-302004	811-102045	811-102044	832-003012	811-101016	811-102028	833-001120
B2-40X25X44-IC	832-002019	824-101010	811-302004	811-102045	811-102044	-	-	811-102028	833-001120
B3-40x25x44	832-002019	824-101010	811-302004	811-102047	811-102045	832-003033	811-101016	811-102028	833-001120
B3-40X25X44-IC	832-002019	824-101010	811-302004	811-102047	811-102045	-	-	811-102028	833-001120
B4-40x25x44	832-002019	824-101010	811-302004	811-102047	811-102045	832-003033	811-101016	811-102028	833-001120
B4-40X25X44-IC	832-002019	824-101010	811-302004	811-102047	811-102045	-	-	811-102028	833-001120
B1-50x32x55	832-002025	824-101010	811-302004	811-102045	-	832-003016	811-101017	811-102036	833-001120
B2-50x32x55	832-002025	824-101010	811-302004	811-102045	-	832-003016	811-101017	811-102036	833-001120
B3-50x32x55	832-002025	824-101010	811-302004	811-102083	811-102047	832-003034	811-101017	811-102036	833-001120
B4-50x32x55	832-002025	824-101010	811-302004	811-102083	811-102047	832-003034	811-101017	811-102036	833-001120
B1-60x32x60	832-002028	824-101020	811-302013	811-102054	-	832-003019	811-101017	811-102036	833-001120
B2-60x32x60	832-002028	824-101020	811-302013	811-102054	-	832-003019	811-101017	811-102036	833-001120
B3-60x32x60	832-002028	824-101020	811-302013	811-102055	-	832-003019	811-101017	811-102036	833-001120
B4-60x32x60	832-002028	824-101020	811-302013	811-102055	-	832-003019	811-101017	811-102036	833-001120

SPARE PARTS

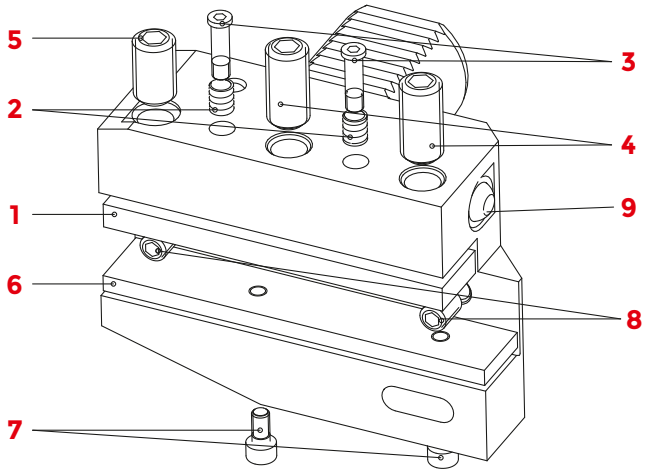

DIN 69880 - B5 - B6 - B7 - B8

	1	2		3		4		5	6	7		8	9
COD.	TOOL CLAMP PLATE	SPRING	Q	SCREW	Q	SCREW	Q	LOCKING SCREW SHORT	SHIM PLATE	SCREW	Q	SCREW	COOLANT NOOSE
B5-30x20x40	832-002013	824-101010	2	811-302004	2	811-102044	2	811-102043	832-003009	811-101016	2	811-102028	833-001120
B6-30x20x40	832-002013	824-101010	2	811-302004	2	811-102044	2	811-102043	832-003009	811-101016	2	811-102028	833-001120
B7-30x20x40	832-002013	824-101010	2	811-302004	2	811-102045	2	811-102044	832-003009	811-101016	1	811-102028	833-001120
B8-30x20x40	832-002013	824-101010	2	811-302004	2	811-102045	2	811-102044	832-003009	811-101016	1	811-102028	833-001120
B5-40x25x44	832-002021	824-101010	2	811-302004	2	811-102045	2	811-102044	832-003014	811-101016	2	811-102028	833-001120
B6-40x25x44	832-002021	824-101010	2	811-302004	2	811-102045	2	811-102044	832-003014	811-101016	2	811-102028	833-001120
B7-40x25x44	832-002021	824-101010	2	811-302004	2	811-102047	2	811-102045	832-003014	811-101016	2	811-102028	833-001120
B8-40x25x44	832-002021	824-101010	2	811-302004	2	811-102047	2	811-102045	832-003014	811-101016	2	811-102028	833-001120
B5-50x32x55	832-002026	824-101010	2	811-302004	2	811-102045	3	-	832-003018	811-101017	2	811-102036	833-001120
B6-50x32x55	832-002026	824-101010	2	811-302004	2	811-102045	3	-	832-003018	811-101017	2	811-102036	833-001120
B7-50x32x55	832-002026	824-101010	2	811-302004	2	811-102083	2	811-102047	832-003018	811-101017	2	811-102036	833-001120
B8-50x32x55	832-002026	824-101010	2	811-302004	2	811-102083	2	811-102047	832-003018	811-101017	2	811-102036	833-001120
B5-60x32x60	832-002029	824-101020	2	811-302013	2	811-102054	3	-	832-003020	811-101017	2	811-102036	833-001120
B6-60x32x60	832-002029	824-101020	2	811-302013	2	811-102054	3	-	832-003020	811-101017	2	811-102036	833-001120

SPARE PARTS

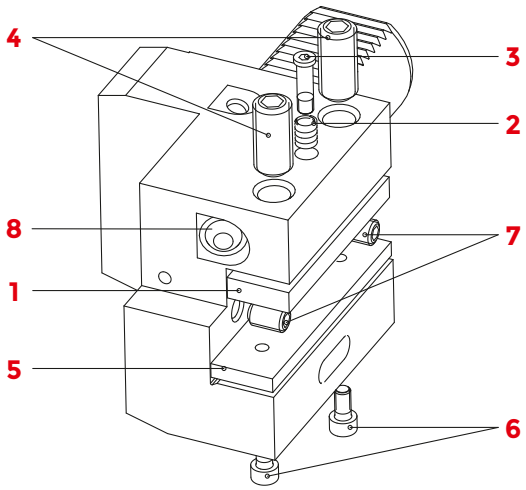

DIN 69880 - C1 - C2 - C3 - C4

	1	2		3		4		5	6		7	8
COD.	TOOL CLAMP PLATE	SPRING	Q	SCREW	Q	SCREW	Q	SHIM PLATE	SCREW	Q	SCREW	COOLANT NOOSE
C1-20x16x50	832-002003	824-101010	1	811-302004	1	811-102030	2	832-003002	811-101016	1	811-102020	833-001100
C2-20x16x50	832-002003	824-101010	1	811-302004	1	811-102030	2	832-003002	811-101016	1	811-102020	833-001100
C1-30x20x70	832-002012	824-101010	1	811-302004	1	811-102044	2	832-003007	811-101016	1	811-102028	833-001120
C1-30x20x70-IC	832-002012	824-101010	1	811-302004	1	811-102044	2	-	-	-	811-102028	833-001120
C2-30x20x70	832-002012	824-101010	1	811-302004	1	811-102044	2	832-003007	811-101016	1	811-102028	833-001120
C2-30x20x70-IC	832-002012	824-101010	1	811-302004	1	811-102044	2	-	-	-	811-102028	833-001120
C3-30x20x70	832-002012	824-101010	1	811-302004	1	811-102045	2	832-003007	811-101016	1	811-102028	833-001120
C3-30x20x70-IC	832-002012	824-101010	1	811-302004	1	811-102045	2	-	-	-	811-102028	833-001120
C4-30x20x70	832-002012	824-101010	1	811-302004	1	811-102045	2	832-003007	811-101016	2	811-102028	833-001120
C4-30x20x70-IC	832-002012	824-101010	1	811-302004	1	811-102045	2	-	-	-	811-102028	833-001120
C1-40x25x85	832-002019	824-101010	1	811-302004	1	811-102045	2	832-003012	811-101016	2	811-102028	833-001120
C1-40x25x85-IC	832-002019	824-101010	1	811-302004	1	811-102045	2	-	-	-	811-102028	833-001120
C2-40x25x85	832-002019	824-101010	1	811-302004	1	811-102045	2	832-003012	811-101016	2	811-102028	833-001120
C2-40x25x85-IC	832-002019	824-101010	1	811-302004	1	811-102045	2	-	-	-	811-102028	833-001120
C3-40x25x85	832-002019	824-101010	1	811-302004	1	811-102047	2	832-003012	811-101016	2	811-102028	833-001120
C3-40x25x85-IC	832-002019	824-101010	1	811-302004	1	811-102047	2	-	-	-	811-102028	833-001120
C4-40x25x85	832-002019	824-101010	1	811-302004	1	811-102047	2	832-003012	811-101016	2	811-102028	833-001120
C4-40x25x85-IC	832-002019	824-101010	1	811-302004	1	811-102047	2	-	-	-	811-102028	833-001120
C1-50x32x100	832-002025	824-101010	1	811-302004	1	811-102045	2	832-003016	811-101017	2	811-102036	833-001120
C2-50x32x100	832-002025	824-101010	1	811-302004	1	811-102045	2	832-003016	811-101017	2	811-102036	833-001120
C3-50x32x100	832-002025	824-101010	1	811-302004	1	811-102083	2	832-003016	811-101017	2	811-102036	833-001120
C4-50x32x100	832-002025	824-101010	1	811-302004	1	811-102083	2	832-003016	811-101017	2	811-102036	833-001120
C1-60x32x125	832-002028	824-101020	1	811-302013	1	811-102054	2	832-003019	811-101017	2	811-102036	833-001120
C2-60x32x125	832-002028	824-101020	1	811-302013	1	811-102054	2	832-003019	811-101017	2	811-102036	833-001120
C3-60x32x125	832-002028	824-101020	1	811-302013	1	811-102055	2	832-003019	811-101017	2	811-102036	833-001120
C4-60x32x125	832-002028	824-101020	1	811-302013	1	811-102055	2	832-003019	811-101017	2	811-102036	833-001120

SPARE PARTS

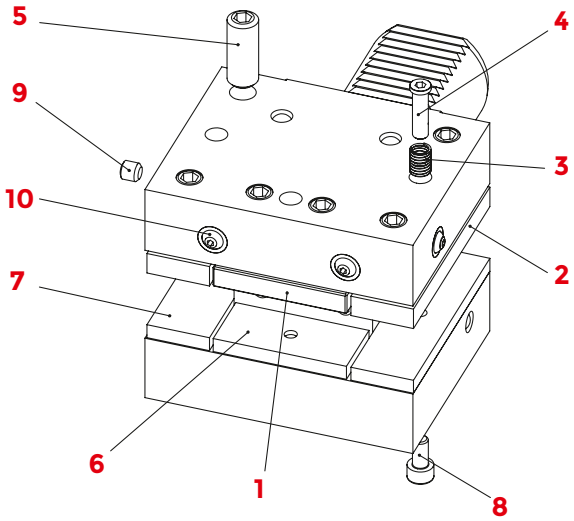

DIN 69880 - D1 - D2

	1	2	3	4	5	6	7	8	9	10
COD.	TOOL CLAMP PLATE (rad)	TOOL CLAMP PLATE (ax)	SPRING	SCREW	LOCKING SCREW	SHIM PLATE (rad)	SHIM PLATE (ax)	SCREW	SCREW	COOLANT NOOSE
D1-30x20x60	832-002008	832-002012	824-101010	811-302004	811-102030	832-003423	832-003006	811-101016	811-106015	833-001060
D2-30x20x60	832-002008	832-002012	824-101010	811-302004	811-102031	832-003423	832-003006	811-101016	811-106015	833-001060
D1-40x25x72	832-002227	832-002019	824-101010	811-302004	811-102039	832-003424	832-003010	811-101016	811-106015	833-001100
D2-40x25x72	832-002227	832-002019	824-101010	811-302004	811-102041	832-003424	832-003010	811-101016	811-106015	833-001100
D1-50x32x85	832-002022	832-002025	824-101010	811-302004	811-102039	832-003425	832-003015	811-101017	811-102026	833-001100
D2-50x32x85	832-002022	832-002025	824-101010	811-302004	811-102041	832-003425	832-003015	811-101017	811-102026	833-001080
D1-60x32x110	832-002228	832-002229	824-101020	811-302013	811-102047	832-003426	832-003017	811-101017	811-102026	833-001110

SPARE PARTS

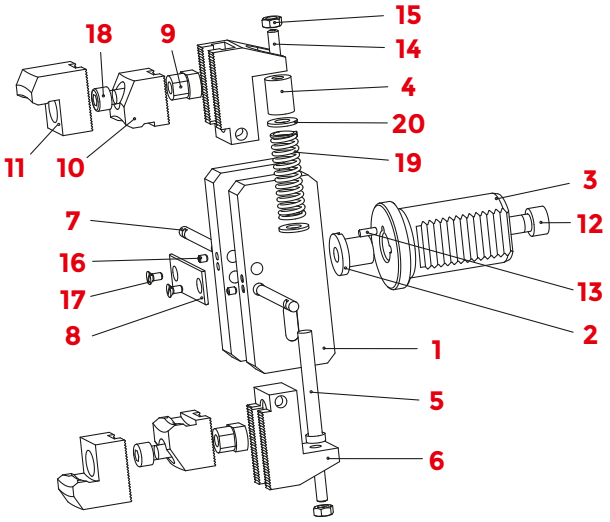

DIN 69880 - HK1

	1	2	3	4	5	6	7	8	9	10
COD.	BODY	THREADED PAWL	SHANK	PAWL	PIN	JAW BASE	PIN	PLATE	DIE SLIDE	SHORT JAW
H120K	KH1-1-20	811-302044	KH1-3-20	832-012013	832-008003	832-012003	832-008005	832-006011	811-302023	832-012002
H125KC	KH1-1-30	811-302022	KH1-3-25C	832-012013	832-008003	832-012003	832-008005	832-006011	811-302023	832-012002
H130K	KH1-1-30	811-302022	KH1-3-30	832-012013	832-008003	832-012003	832-008005	832-006011	811-302023	832-012002
H132KC	KH1-1-30	811-302022	KH1-3-32C	832-012013	832-008003	832-012003	832-008005	832-006011	811-302023	832-012002
H140K	KH1-1-40	811-302022	KH1-3-40	832-012005	832-008004	832-012004	832-008006	832-006012	811-302023	832-012002
H140KC	KH1-1-40	811-302022	KH1-3-40C	832-012005	832-008004	832-012004	832-008006	832-006012	811-302023	832-012002
H150KC	KH1-1-5060	811-302056	KH1-30-50C	832-012009	832-008008	832-012010	832-008009	832-006015	811-302117	832-012011

	11	12	13	14	15	16	17	18	19	20
COD.	LONG JAW	SCREW	PIN	SCREW	NUT	SCREW	SCREW	SCREW	SPRING	WASHER
H120K	832-012001	811-401111	815-210090	811-102022	812-101004	811-102002	811-108006	811-101040	824-101050	813-101090
H125KC	832-012001	811-101055	815-210090	811-102022	812-101004	811-102002	811-108006	811-101040	824-101050	813-101090
H130K	832-012001	811-101055	815-210090	811-102022	812-101004	811-102002	811-108006	811-101040	824-101050	813-101090
H132KC	832-012001	811-101055	815-210090	811-102022	812-101004	811-102002	811-108006	811-101040	824-101050	813-101090
H140K	832-012001	811-101055	815-210090	811-102022	812-101004	811-102002	811-108006	811-101040	824-101060	813-101090
H140KC	832-012001	811-101055	815-210090	811-102022	812-101004	811-102002	811-108006	811-101040	824-101060	813-101090
H150KC	832-012012	811-101068	815-210180	811-102030	812-101005	811-102002	811-108006	811-101052	824-101120	813-101100

SPARE PARTS

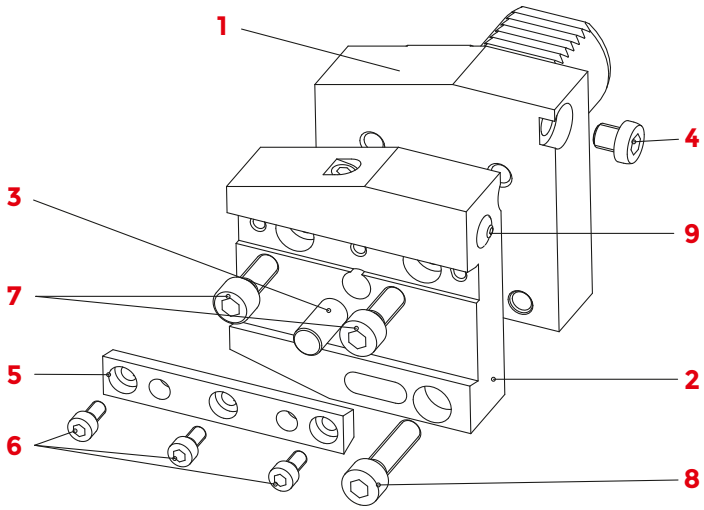

DIN 69880 - AR - AL - ARU - ALU

	1	2	3	4	5	6	7	8	9
COD.	VDI SHANK	TOOLHOLDER PLATE	PIN	STOP SCREW	TOOL CLAMPING	SCREW	SCREW	SCREW	COOLANT NOOSE
AR3026	117-130011	117-130101	815-210010	811-303011	832-002037	811-101016	811-101040	811-101042	833-001100
AR3026-IC	117-130011	117-130212	815-210010	811-303011	832-002037	811-101016	811-101040	811-101042	833-001100
AL3026	117-230011	117-230101	815-210010	811-303011	832-002037	811-101016	811-101040	811-101042	833-001100
ARU3026	117-330011	117-330101	815-210010	811-303011	832-002037	811-101016	811-101040	811-101042	833-001100
AR4026	117-140011	117-140101	815-210020	811-303011	832-002038	811-101016	811-101040	811-101042	833-001100
AR4026-IC	117-140011	117-140252	815-210020	811-303011	832-002038	811-101016	811-101040	811-101042	833-001100
AR4032	117-140011	117-140111	815-210020	811-303011	832-002039	811-101016	811-101040	811-101042	833-001100
AR4032-IC	117-140011	117-140262	815-210020	811-303011	832-002039	811-101016	811-101040	811-101042	833-001100
AL4032	117-240011	117-240111	815-210020	811-303011	832-002039	811-101016	811-101040	811-101042	833-001100
ARU4032	117-340011	117-340111	815-210020	811-303011	832-002039	811-101016	811-101040	811-101042	833-001100
ALU4032	117-440011	117-440111	815-210020	811-303011	832-002039	811-101016	811-101040	811-101042	833-001100
AR5032	117-150011	117-150111	815-210020	811-303011	832-002041	811-108018	811-101040	811-101042	833-001120

BLANKING PLUG

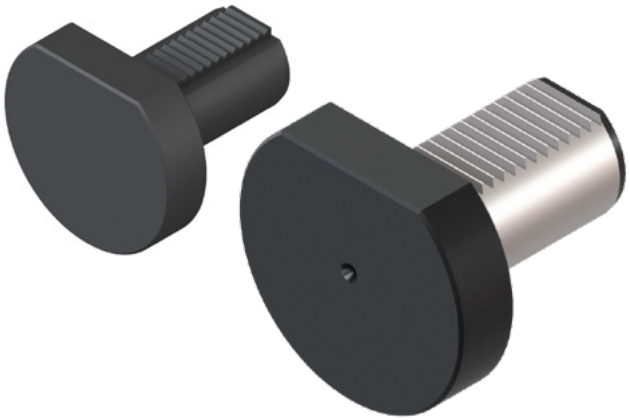

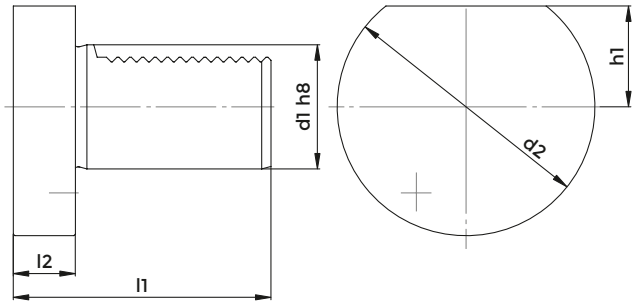

Z2

COD. (PLASTIC)	COD. (STEEL)	d1	d2	h1	l1	l2
Z216P	Z216	16	40	18	45	13
Z220P	Z220	20	50	23	56	16
Z230P	Z230	30	68	28	71	16
Z240P	Z240	40	83	32.5	83	20
Z250P	Z250	50	98	35	98	20
Z260P	Z260	60	123	42.5	114	20

CYLINDRICAL BAR STOP

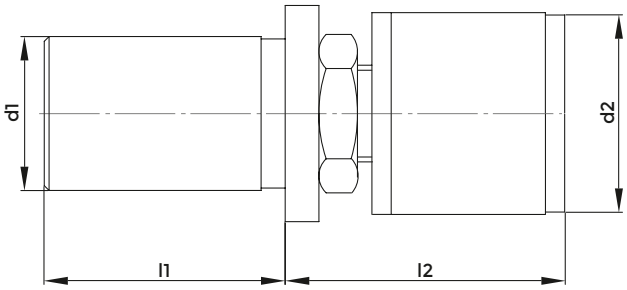

CW

COD.	d1	d2	l1	l2
CW-1620	16	20	32	36 - 62
1719	19,05	20	32	36 - 62
1720	19,05	26	46	45 - 75
CW-2034	20	34	50	62 - 100
1448	22	34	50	62 - 100
CW-2534	25	34	50	62 - 100
CW-2542	25	42	50	62 - 100
CW-2556	25	56	50	62 - 100
1450	25,4	34	50	62 - 100
CW-3042	30	42	50	62 - 100
1735	30	56	50	62 - 100
CW-3242	32	42	50	62 - 100
CW-3256	32	56	50	62 - 100
CW-4042	40	42	70	62 - 100
1797	40	56	70	62 - 100

CYLINDRICAL REVOLVING BAR STOP WITH SHOCK ABSORBER

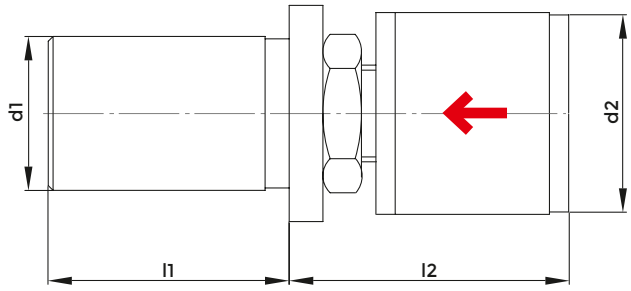

CW

COD.	d1	d2	l1	l2
CW-2034-L35-AM	20	34	35	62 - 90
CW-2034-AM	20	34	50	62 - 100
CW-2534-AM	25	34	50	62 - 100
CW-2542-AM	25	42	50	62 - 100
CW-2556-AM	25	56	50	62 - 100
1024	25,4	42	50	62 - 100
CW-3042-AM	30	42	50	62 - 100
1552	30	56	50	62 - 100
1560	31,75	42	50	62 - 100
CW-3242-AM	32	42	50	62 - 100
CW-3256-AM	32	56	50	62 - 100
CW-4042-AM	40	42	70	62 - 100
CW-4056-AM	40	56	70	62 - 100

Unlike the normal rotating bar stop, in the shock-absorbing model, in addition to the radial bearing and the thrust bearing, there is a series of cup springs to better absorb any impacts of the bar.

AXIAL TOOLHOLDER WITH POLYGONAL COUPLING

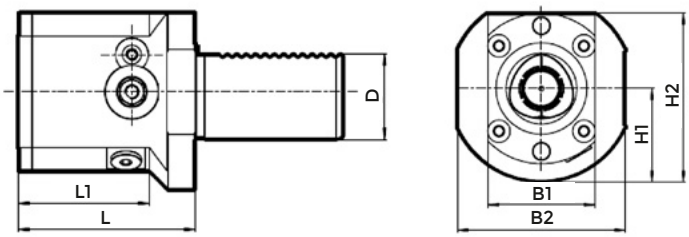

DIN ISO 26623-1

COD.	SHANK	L	l1	D	B1	B2	H1	H2
VDI40L75C40R/L	C40	75	56	40	48	75	41	75
VDI40L85C50R/L	C50	85	72	40	64	75	41	83
VDI40L109C63R/L	C63	109	109	40	84	84	52	104
VDI50L85C50R/L	C50	85	62	50	64	83	49	91
VDI50L105C63R/L	C63	105	105	50	84	84	52	104

LIVE CENTER

LIVE CENTER WITH DIFFERENTIAL LOAD

VERSION CIL.

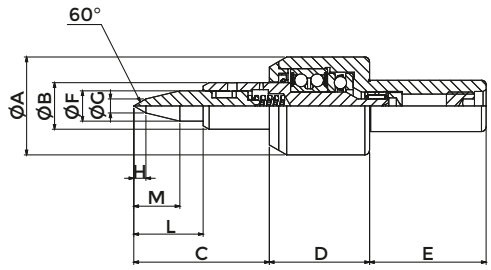

VERSION C.M.

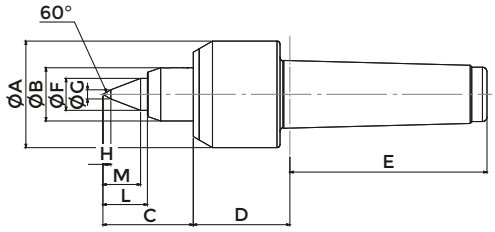

SERIE-K1

CODE N.	SHANK	A	D	E	B	F	G	H	M	L	C	WEIGHT (Kg)	LOAD (N)	MAX ROUNDS (r.p.m.)	MAX THRUST Max (N)	MAX OSCILLATION Max (MM)
450-00200	CM3	42	48	81	20	13	6	5,2	19,7	25,3	53,3	0,6	ASS.1800/RAD.610	6000	600	0,6
450-00209	CM4	60	61,5	102,5	28	16	6	5,2	19,7	26,6	54	1,1	ASS.3040/RAD.1130	4500	900	0,6
450-00218	CM5	70	63,5	129,5	35	21	6	5,2	24,4	28,9	59,6	1,9	ASS.3730/RAD.1500	4000	1200	0,8
450-00201	CIL.22	42	43	50	20	13	6	5,2	19,7	25,3	53,3	0,6	ASS.1800/RAD.610	6000	600	0,6
450-00210	CIL.28	60	55	50	28	16	6	5,2	19,7	26,6	54	1,1	ASS.3040/RAD.1130	4500	900	0,6
450-00219	CIL.32	70	57	50	35	21	6	5,2	24,4	28,9	59,6	1,9	ASS.3730/RAD.1500	4000	1200	0,8

HIGH PRECISION LIVE CENTER WITH RING NUT

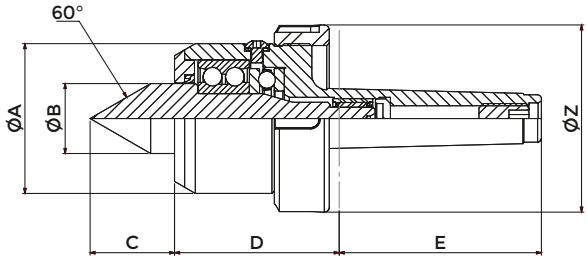

SERIE-MWS60 HP

CODE N.	SHANK	A	B	C	D	E	Z	WEIGHT (Kg)	LOAD (N)	MAX ROUNDS (r.p.m.)
450-00124	CM3	60	28	34	66	81	75	1,1	ASS.3040/RAD.970	4500
450-00143	CM4	70	35	69,5	69,5	102,5	82	1,9	ASS.3730/RAD.1730	4000
450-00166	CM5	90	40	50	76,5	129,5	105	3,9	ASS.5100/RAD.2530	2800
450-00191	CM6	130	65	71	92,5	195	160	9,1	ASS.10290/RAD.13960	2400

double angles live center

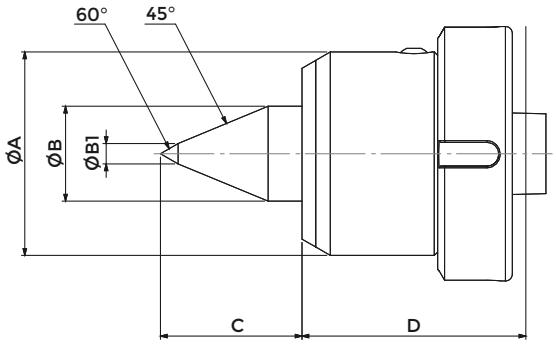

SERIE-MWS45 HP

CODE N.	SHANK	A	B	B1	C	D	E	WEIGHT (Kg)	LOAD (N)	MAX ROUNDS (r.p.m.)
450-00125	CM3	60	28	6	41,5	66	81	1,1	ASS.3040/RAD.970	4500
450-00144	CM4	70	35	9	51,4	69,5	102,5	1,9	ASS.3730/RAD.1730	4000
450-00167	CM5	90	40	12	51,5	76,5	129,5	3,9	ASS.5100/RAD.2530	2800

HIGH PRECISION LIVE CENTER WITH RING NUT AND INTERCHANGEABLE POINT

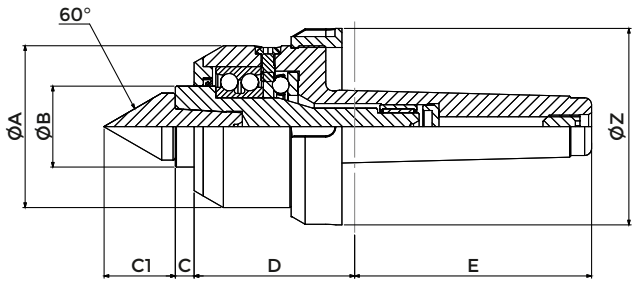

SERIE-MWS-IP HP

CODE N.	SHANK	A	B	C1	C	D	E	Z	MAX ROUNDS (r.p.m.)	WEIGHT (Kg)	LOAD (N)
450-00126	CM3	60	28	25	7	37	66	81	4500	1,1	ASS.3040/RAD.970
450-00145	CM4	70	35	29	8	41	69,5	102,5	4000	1,9	ASS.3730/RAD.1730
450-00168	CM5	90	40	35	8	46	76,5	129,5	2800	3,9	ASS.5100/RAD.2530

HIGH LOAD LIVE CENTER WITH RING NUT

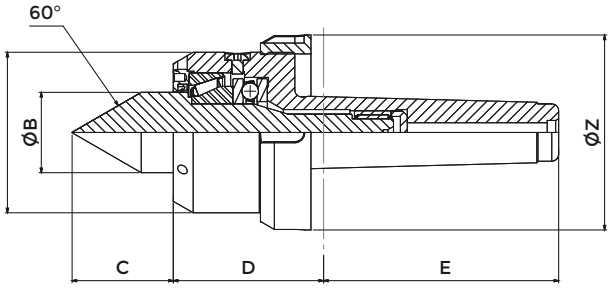

SERIE-MWS/CP

CODE N.	SHANK	A	B	C	D	E	Z	ECCENTRICITY (mm)	MAX ROUNDS (r.p.m.)	WEIGHT (Kg)	LOAD (N)
450-00129	CM3	60	28	38	51	92	75	0,005	4000	1,9	ASS.3040/RAD.2350
450-00151	CM4	70	35	46	54	11,5	82	0,005	4000	1,9	ASS.3730/RAD.3450
450-00172	CM5	90	40	53	65	136	105	0,005	2800	3,9	ASS.6370/RAD.4010
450-00191	CM6	130	65	71	92,5	195	160	0,010	2400	9,1	ASS.10290/RAD.13960

SERIE MWS/CP-F

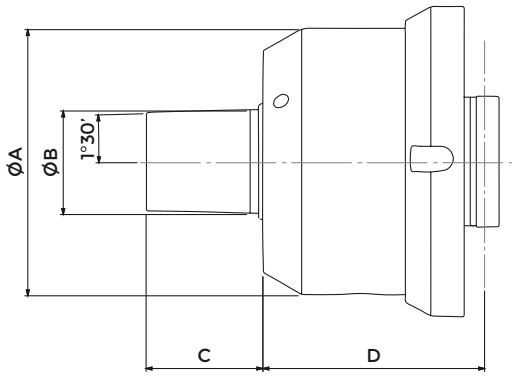

SERIE-MWS/CP-F

CODE N.	SHANK	A	B	C	D
450-00154	CM4	70	35	40	54
450-00177	CM5	90	35	40	65
450-00192	CM6	130	35	40	92,5

LIVE CENTER WITH INTEGRAL POINT FOR TUBES

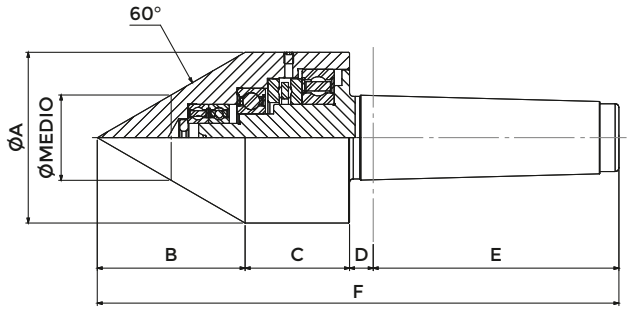

SERIE-MWS/TU

CODE N.	SHANK	WEIGHT (Kg)	LOAD (N)	A	B	C	D	E	F	ECCENTRICITY (mm)	MAX ROUNDS (r.p.m.)
450-00128	CM3	1,5	ASS.2450/RAD.900	60	52	30	10	81	173	0,015/0,008	5700
450-00147	CM4	2,3	ASS.3730/RAD.1320	70	60,5	45,5	11,5	102,5	220	0,015/0,008	4500
450-00149	CM4	2,3	ASS.3730/RAD.1320	90	78	28	11,5	102,5	220	0,015/0,008	4500
450-00148	CM4	2,3	ASS.3730/RAD.1320	110	95	10	11,5	102,5	220	0,015/0,008	4500
450-00170	CM5	4	ASS.4740/RAD.2360	90	78	55	12,5	129,5	275	0,02/0,01	3600
450-00171	CM5	4	ASS.4740/RAD.2360	110	95	38	12,5	129,5	275	0,02/0,01	3600
450-00176	CM5	4	ASS.4740/RAD.2360	200	173	15	12,5	129,5	330	0,02/0,01	3600
450-00190	CM6	10	ASS.6680/RAD.2480	110	95	60	17	182	354	0,02/0,015	2600

LIVE CENTER WITH HARD METAL POINT FOR GRINDING

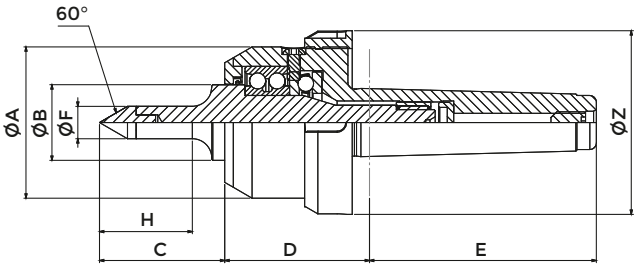

SERIE-MWS/RT60

CODE N.	SHANK	A	B	C	D	E	F	H	Z	MAX ROUNDS (r.p.m.)	WEIGHT (Kg)	LOAD (N)
450-00130	CM3	60	28	58	55	92	15	41	75	4500	1,1	ASS.3040/RAD.1240
450-00150	CM4	70	35	58	57	115	15	41	82	4000	1,9	ASS.3730/RAD.1540
450-00173	CM5	90	40	58	70	136	15	41	105	2800	3,9	ASS.5100/RAD.1710

LIVE CENTER WITH HARD METAL POINT FOR GRINDING

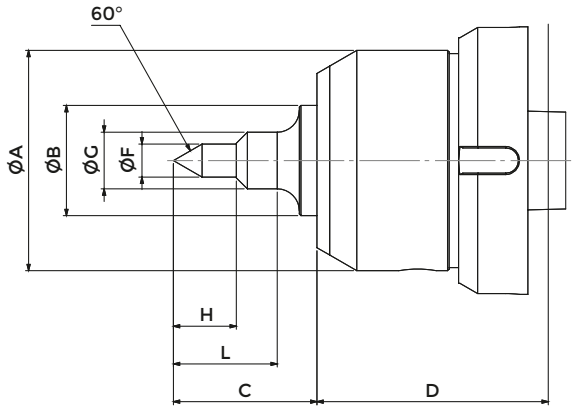

SERIE-MWS/RTR

CODE N.	SHANK	A	B	C	D	E	F	G	H	Z	L	MAX ROUNDS (r.p.m.)	WEIGHT (Kg)	LOAD (N)
450-00131	CM3	60	28	46	55	92	10	18	20	75	33	4500	1,1	ASS.3040/RAD.1240
450-00152	CM4	70	35	46	57	115	10	18	20	82	33	4000	1,9	ASS.3730/RAD.1540
450-00174	CM5	90	40	46	70	136	10	18	20	105	33	2800	3,9	ASS.5100/RAD.1710

LIVE CENTER WITH HARD METAL POINT FOR GRINDING

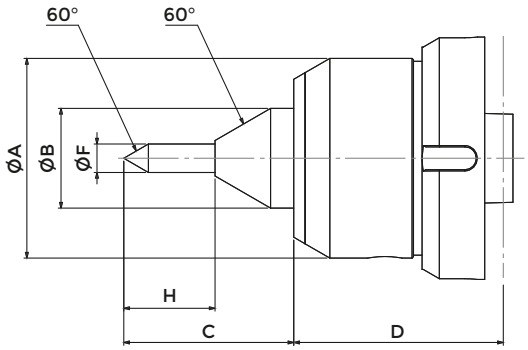

SERIE-MWS/RTS

CODE N.	SHANK	A	B	C	D	E	F	H	Z
450-00132	CM3	60	28	53	55	92	9,7	32	75
450-00153	CM4	70	35	58,9	57	115	9,7	32	82
450-00175	CM5	90	40	64	70	136	9,7	32	105

LIVE CENTER WITH HARD METAL POINT FOR GRINDING

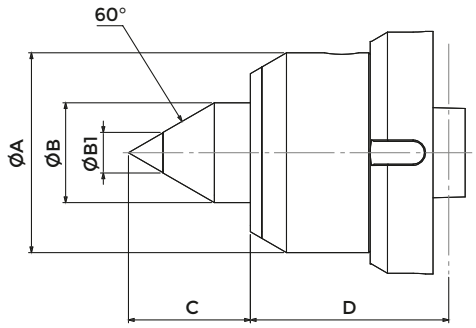

SERIE-MWS/RTD

CODE N.	SHANK	A	B	B1	C	D	E	Z
450-00127	CM3	60	28	11	34	55	92	75
450-00146	CM4	70	35	14	43	57	115	82
450-00169	CM5	90	40	20	50	70	136	105

HIGH SPEED LIVE CENTER WITHOUT RING NUT

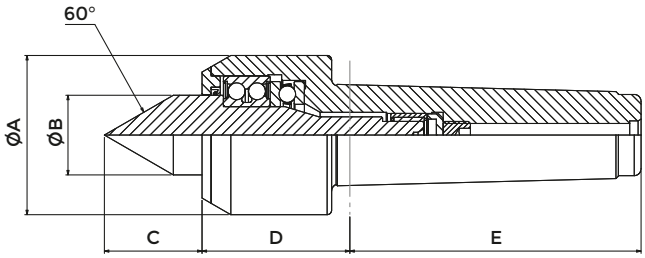

SERIE-K1 SPEED

CODE N.	SHANK	A	B	C	D	E	LOAD (N)	MAX ROUNDS (r.p.m.)
450-00196	CM2	42	20	25	48	64	ASS.1650/RAD.610	6500
450-00198	CM3	42	20	25	48	81	ASS.2110/RAD.630	6000
450-00207	CM4	62	28	34	61,5	102,5	ASS.3040/RAD.1490	4500
450-00217	CM5	70	35	43	61,5	139,5	ASS.3730/RAD.1750	4000

HIGH SPEED LIVE CENTER WITHOUT RING NUT

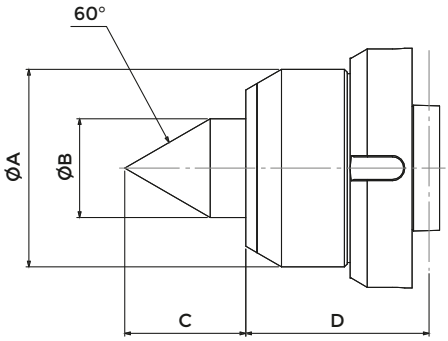

SERIE-K1 SPEED/RN

CODE N.	SHANK	A	B	C	D	E	Z
450-00211	CM4	60	28	34	61,5	102,5	75
450-00220	CM5	70	35	43	63,5	129,5	82

LOW SPEED LIVE CENTER WITHOUT RING NUT, ROTARY POINT AND BODY

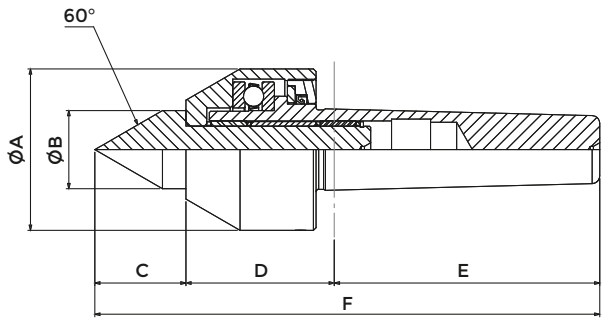

SERIE-K1 SLOW

CODE N.	SHANK	A	B	C	D	E	F	WEIGHT (Kg)	LOAD (N)	MAX ROUNDS (r.p.m.)
450-00001	CM3	56	24	28	57	81	166	1,3	ASS.4380/RAD.790	4000
450-00002	CM4	62	30	35	56,5	102,5	194	1,8	ASS.4040/RAD.880	3500
450-00003	CM5	79	38	45	65,5	129,5	240	3,5	ASS.6330/RAD.1540	2500

DEAD CENTER FOR CNC LATHE

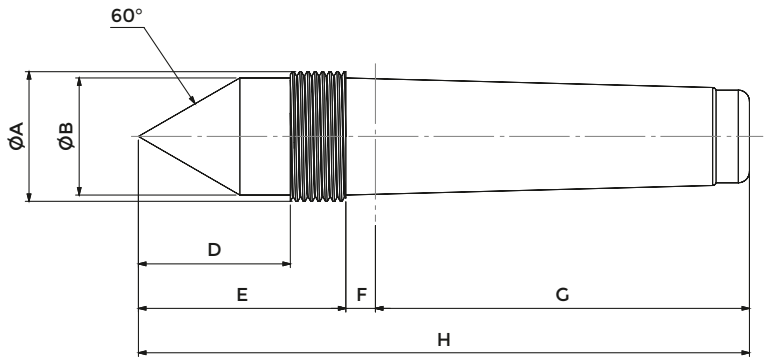

SERIE-K3

CODE N.	SHANK	A	B	D	E	F	G	H
450-00038	CM3	M30X1,5	24	35	50	5	81	136
450-00063	CM4	M35X1,5	31,5	41	56	6,5	102,5	165
450-00091	CM5	M50X1,5	44	65	80	6,5	129,5	216
450-00113	CM6	M70X2	64	80,5	95,5	8	182	285,5

EXTENDED DEAD CENTER FOR CNC LATHE

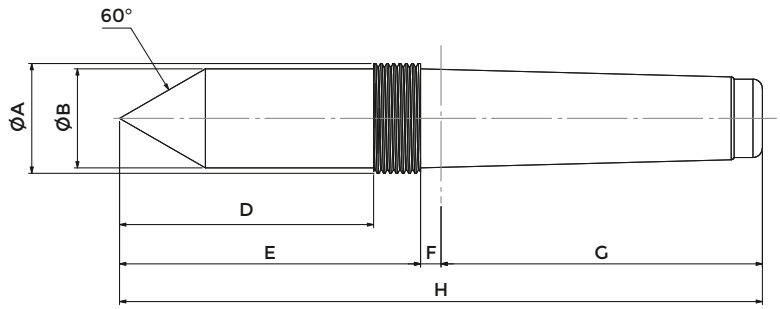

SERIE-K3L

CODE N.	SHANK	A	B	D	E	F	G	H
450-00045	CM3	M30X1,5	24	70	85	5	81	171
450-00055	CM4	M35X1,5	31,5	81	96	6,5	102,5	205
450-00098	CM5	M50X1,5	44	105	120	6,5	129,5	256
450-00105	CM6	M70X2	64	110,5	125,5	8	182	315,5

DEAD CENTER FOR CNC LATHE

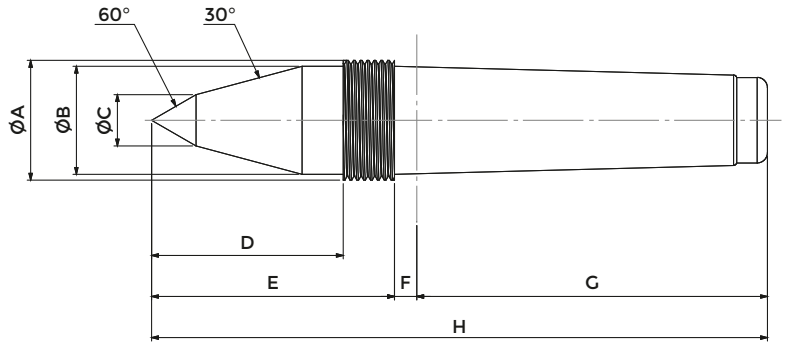

SERIE-K3R

CODE N.	SHANK	A	B	C	D	E	F	G	H
450-00041	CM3	M30X1,5	24	12	47	62	5	81	148
450-00066	CM4	M35X1,5	31,5	15	56	71	6,5	102,5	180
450-00094	CM5	M50X1,5	44	18	80	95	6,5	129,5	231
450-00115	CM6	M70X2	64	20	124,4	139,4	8	182	329,4

DEAD CENTER FOR CNC LATHE WITH INTERCHANGEABLE POIN

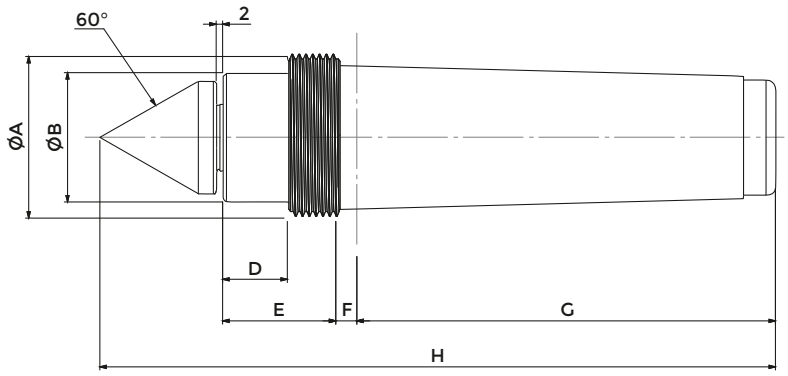

SERIE-K3/IP

CODE N.	SHANK	A	B	D	E	F	G	H
450-00039	CM3	M30X1,5	26	20	35	5	81	151
450-00064	CM4	M35X1,5	32	20	35	6,5	102,5	167
450-00092	CM5	M50X1,5	40	20	35	6,5	129,5	209

DEAD CENTER FOR CNC LATHE WITH POINT FOR FLANGE

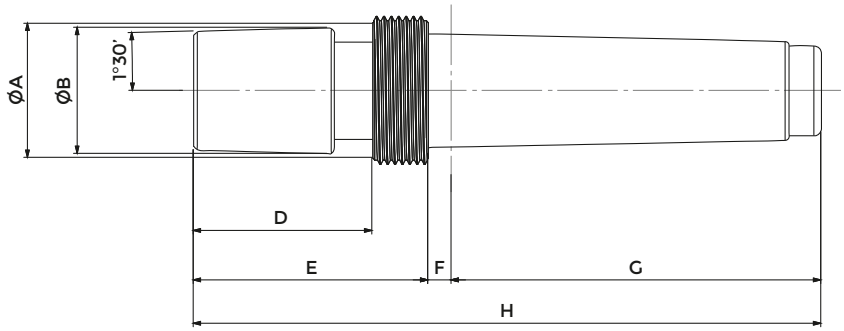

SERIE-K3/F

CODE N.	SHANK	A	B	D	E	F	G	H
450-00042	CM3	M30X1,5	35	50	65	5	81	151
450-00067	CM4	M35X1,5	35	50	65	6,5	102,5	174
450-00095	CM5	M50X1,5	35	50	65	6,5	129,5	231
450-00116	CM6	M70X2	35	50	65	8	182	255

HARD METAL DEAD CENTER FOR GRINDING

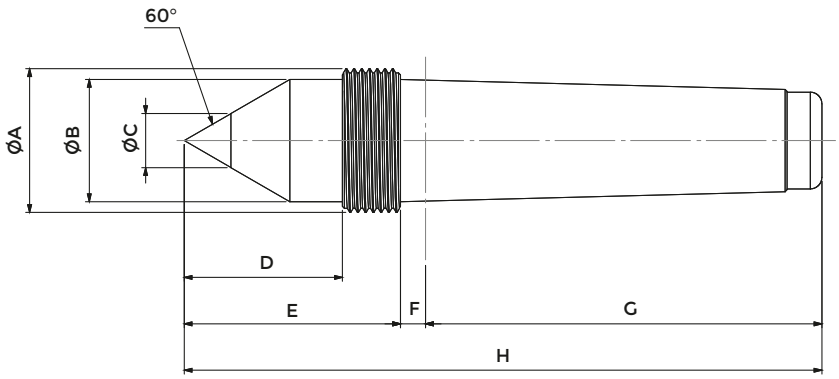

SERIE-K4/RT

CODE N.	SHANK	A	B	C	D	E	F	G	H
450-00040	CM3	M30X1,5	24	11	35	50	5	81	136
450-00025	CM3	M30X1,5	24	24	35	50	5	81	136
450-00065	CM4	M35X1,5	31,5	14	41	56	6,5	102,5	165
450-00051	CM4	M35X1,5	31,5	31,5	41	56	6,5	102,5	165
450-00093	CM5	M50X1,5	44	25	65	80	6,5	129,5	216
450-00078	CM5	M50X1,5	44	44	65	80	6,5	129,5	216
450-00114	CM6	M70X2	64	40	80,5	95,5	8	182	285,5

EXTENDED HARD METAL DEAD CENTER FOR GRINDING

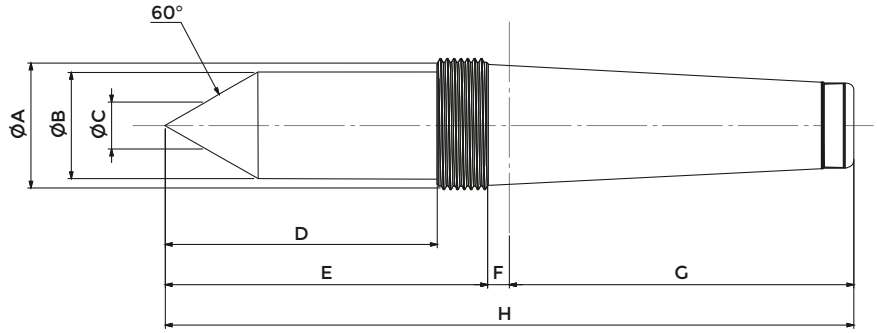

SERIE-K4/RT L

CODE N.	SHANK	A	B	C	D	E	F	G	H
450-00046	CM3	M30X1,5	24	11	70	85	5	81	171
450-00047	CM3	M30X1,5	24	24	70	85	5	81	171
450-00056	CM4	M35X1,5	31,5	14	81	96	6,5	102,5	205
450-00057	CM4	M35X1,5	31,5	31,5	81	96	6,5	102,5	205
450-00099	CM5	M50X1,5	44	25	105	120	6,5	129,5	256
450-00100	CM5	M50X1,5	44	44	105	120	6,5	129,5	256
450-00106	CM6	M70X2	64	40	110,5	125,5	8	182	315,5

HARD METAL DEAD CENTER FOR GRINDING

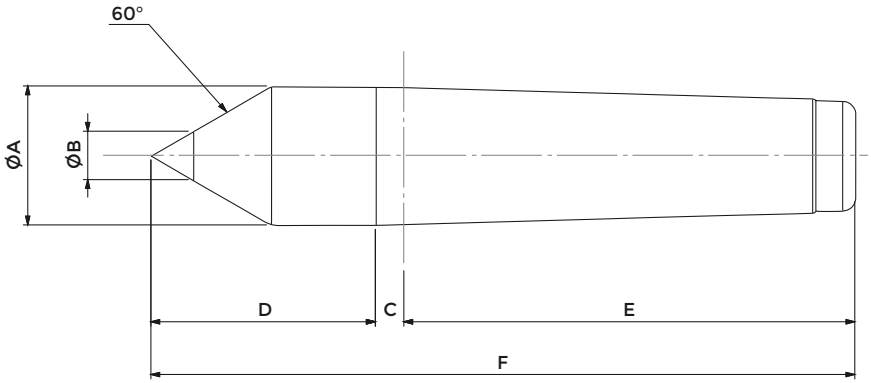

SERIE-K4/RT-NG

CODE N.	SHANK	A	B	C	D	E	F
450-00036	CM3	24,1	11	5	39	81	125
450-00034	CM3	24,1	24,1	5	39	81	125
450-00061	CM4	31,6	14	6,5	51	102,5	160
450-00073	CM4	31,6	31,6	6,5	51	102,5	160
450-00089	CM5	44,7	25	6,5	64	129,5	200
450-00082	CM5	44,7	44,7	6,5	64	129,5	200
450-00111	CM6	63,8	40	8	80	182	270

EXTENDED HARD METAL DEAD CENTER FOR GRINDING

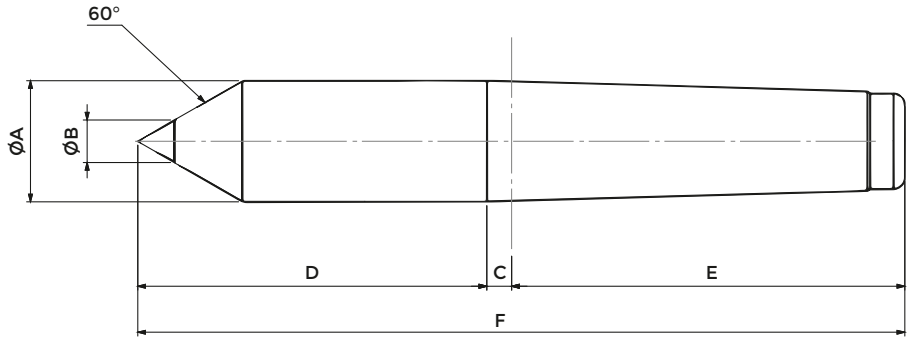

SERIE-K4/RT-NGL

CODE N.	SHANK	A	B	C	D	E	F
450-00031	CM3	24,1	11	5	74	81	160
450-00030	CM3	24,1	24,1	5	74	81	160
450-00069	CM4	31,6	14	6,5	91	102,5	200
450-00068	CM4	31,6	31,6	6,5	91	102,5	200
450-00087	CM5	44,7	25	6,5	104	129,5	240
450-00086	CM5	44,7	44,7	6,5	104	129,5	240
450-00109	CM6	63,8	40	8	110	180	300

HARD METAL DEAD CENTER FOR GRINDING

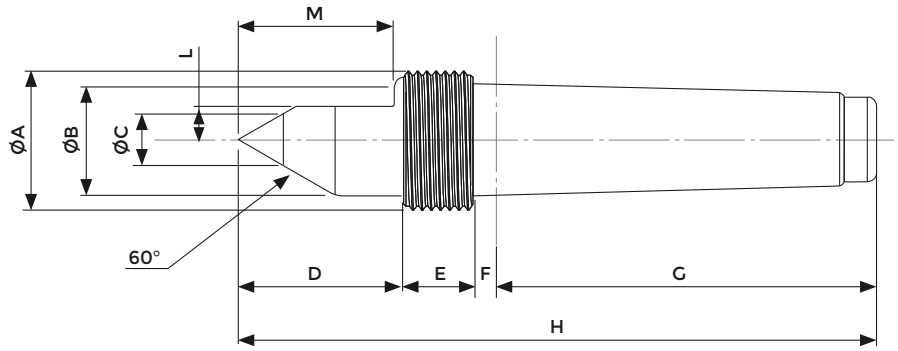

SERIE-K4/RT-T

CODE N.	SHANK	A	B	C	D	E	F	G	H	L	M
450-00026	CM3	M30X1,5	24	11	35	50	5	81	136	7	33
450-00043	CM3	M30X1,5	24	18	35	50	5	81	136	10,5	33
450-00044	CM3	M30X1,5	24	24	35	50	5	81	136	9	33
450-00052	CM4	M35X1,5	31,6	14	41	56	6,5	102,5	165	8,5	38
450-00053	CM4	M35X1,5	31,6	20	41	56	6,5	102,5	165	11,5	38
450-00054	CM4	M35X1,5	31,6	31,6	41	56	6,5	102,5	165	10,5	38
450-00079	CM5	M50X1,5	44,7	14	65	80	6,5	129,5	216	9	61
450-00096	CM5	M50X1,5	44,7	30	65	80	6,5	129,5	216	17	61
450-00097	CM5	M50X1,5	44,7	44,7	65	80	6,5	129,5	216	17	61
450-00104	CM6	M70X2	64	40	80,5	95,5	8	182	285,5	22	75

EXTENDED HARD METAL DEAD CENTER FOR GRINDING

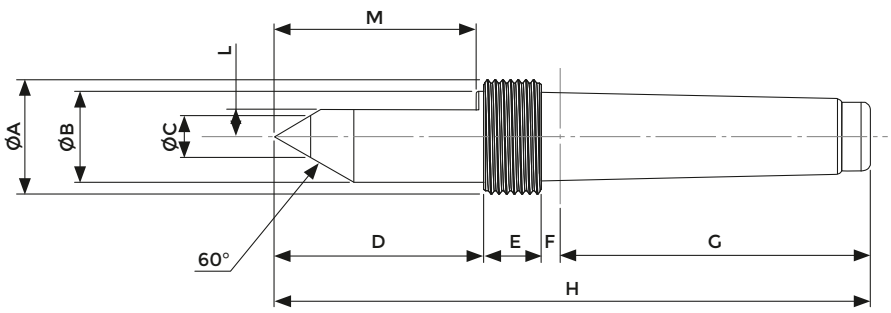

SERIE-K4/RT-TL

CODE N.	SHANK	A	B	C	D	E	F	G	H	L	M
450-00048	CM3	M30X1,5	24	11	70	85	5	81	171	7	68
450-00049	CM3	M30X1,5	24	18	70	85	5	81	171	10,5	68
450-00050	CM3	M30X1,5	24	24	70	85	5	81	171	9	68
450-00058	CM4	M35X1,5	31,6	14	81	96	6,5	102,5	205	8,5	78
450-00059	CM4	M35X1,5	31,6	20	81	96	6,5	102,5	205	11,5	78
450-00077	CM4	M35X1,5	31,6	31,6	81	96	6,5	102,5	205	10,5	78
450-00101	CM5	M50X1,5	44,7	14	105	120	6,5	129,5	256	9	101
450-00102	CM5	M50X1,5	44,7	30	105	120	6,5	129,5	256	17	101
450-00103	CM5	M50X1,5	44,7	44,7	105	120	6,5	129,5	256	17	101
450-00107	CM6	M70X2	64	40	110,5	125,5	8	182	315,5	22	105

HARD METAL DEAD CENTER FOR GRINDING

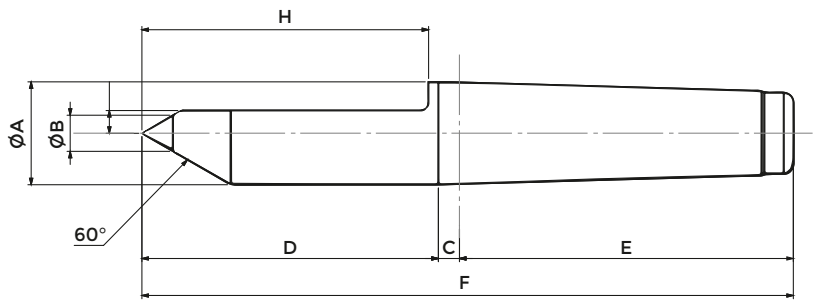

SERIE-K4/RT-NGT

CODE N.	SHANK	A	B	C	D	E	F	G	H
450-00037	CM3	24,1	11	5	39	81	125	7	37
450-00033	CM3	24,1	18	5	39	81	125	10,5	37
450-00032	CM3	24,1	24,1	5	39	81	125	9	37
450-00076	CM4	31,6	14	6,5	51	102,5	160	8,5	48
450-00075	CM4	31,6	20	6,5	51	102,5	160	11,5	48
450-00074	CM4	31,6	31,6	6,5	51	102,5	160	10,5	48
450-00090	CM5	44,7	14	6,5	64	129,5	200	9	60
450-00081	CM5	44,7	30	6,5	64	129,5	200	17	60
450-00080	CM5	44,7	44,7	6,5	64	129,5	200	17	60
450-00112	CM6	63,8	40	8	80	182	270	22	75

EXTENDED HARD METAL DEAD CENTER FOR GRINDING

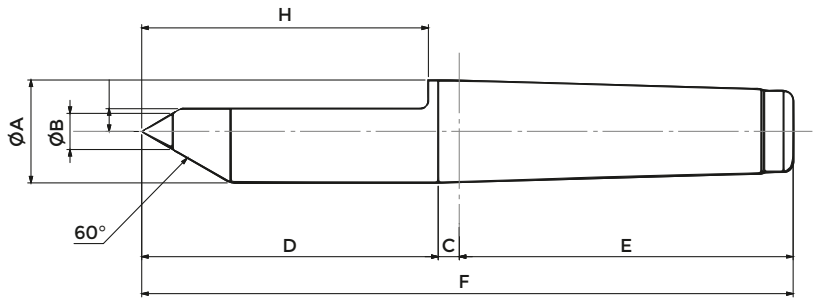

SERIE-K4/RT-NGTL

CODE N.	SHANK	A	B	C	D	E	F	G	H
450-00029	CM3	24,1	11	5	74	81	160	7	72
450-00028	CM3	24,1	18	5	74	81	160	10,5	72
450-00027	CM3	24,1	24,1	5	74	81	160	9	72
450-00072	CM4	31,6	14	6,5	91	102,5	200	8,5	88
450-00071	CM4	31,6	20	6,5	91	102,5	200	11,5	88
450-00070	CM4	31,6	31,6	6,5	91	102,5	200	10,5	88
450-00085	CM5	44,7	14	6,5	104	129,5	240	9	100
450-00084	CM5	44,7	30	6,5	104	129,5	240	17	100
450-00083	CM5	44,7	44,7	6,5	104	129,5	240	17	100
450-00108	CM6	63,8	40	8	110	182	300	22	105

LIVE CENTER FOR CHUCK APPLICATION

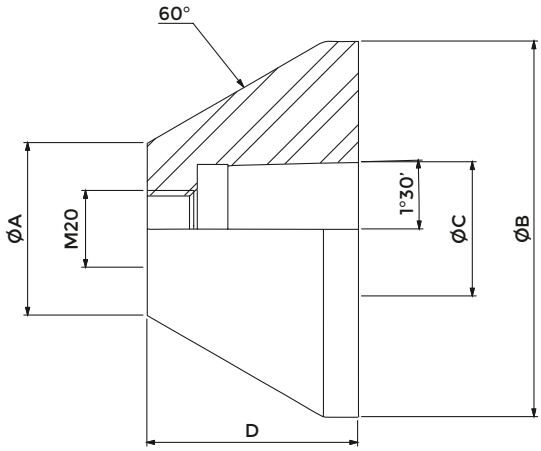

CODE N.	MODEL	A	B	C	D
450-00119	MWS 45X98	45	98	35	55
450-00120	MWS 95X148	95	148	35	55
450-00121	MWS 145X198	145	198	35	55
450-00122	MWS 195X248	195	248	35	55
450-00123	MWS 245X298	245	298	35	55

TECHNICAL DATA INTERCHANGEABLE POINTS FOR SERIE-MWS-IP HP

	CODE N.	FORM	MORSE TAPER	L1	L2	L3	A	B	C	D
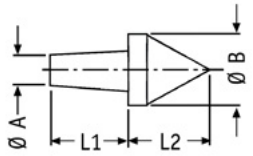	450-00133	A	3	27	28	-	10,4	25	-	-
	450-00156	A	4	29	31	-	12	29	-	-
	450-00179	A	5	30	36	-	17,2	35	-	-
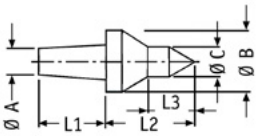	450-00135	B	3	27	34	16	10,4	25	12	-
	450-00158	B	4	29	37	16,5	12	29	12	-
	450-00181	B	5	30	42	19	17,2	35	15	-
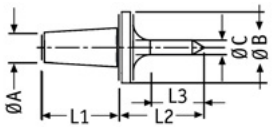	450-00136	C	3	27	30	19	10,4	25	5	-
	450-00159	C	4	29	30	19	12	29	5	-
	450-00182	C	5	29	30	19	17,2	29	5	-
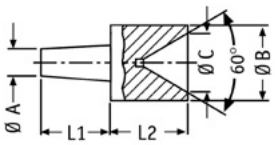	450-00139	D	3	27	30	-	10,4	29	23	-
	450-00162	D	4	29	30	-	12	29	23	-
	450-00185	D	5	30	35	-	17,2	35	27	-
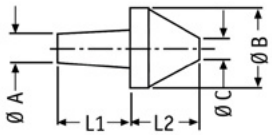	450-00141	E	3	27	35	-	10,4	59	26	-
	450-00164	E	4	29	35	-	12	59	26	-
	450-00187	E	5	30	35	-	17,2	59	26	-
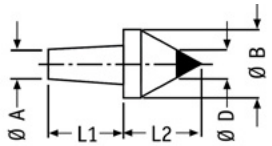	450-00134	F	3	27	28	-	10,4	25	-	11
	450-00157	F	4	29	31	-	12	29	-	11
	450-00180	F	5	30	36	-	17,2	35	-	14
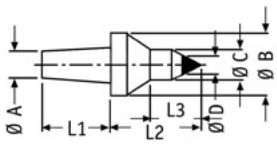	450-00137	G	3	27	34	16	10,4	25	12	7
	450-00160	G	4	29	37	16,5	12	29	12	7
	450-00183	G	5	30	42	19	17,2	35	15	11
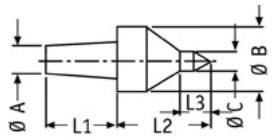	450-00138	H	3	27	34	11	10,4	25	7	-
	450-00161	H	4	29	37	13	12	29	7	-
	450-00184	H	5	30	42	12	17,2	35	7	-
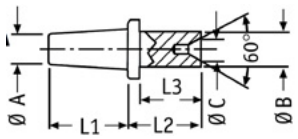	450-00140	I	3	27	25	21	10,4	12	8	-
	450-00163	I	4	29	25	21	12	12	8	-
	450-00186	I	5	30	25	21	17,2	12	8	-
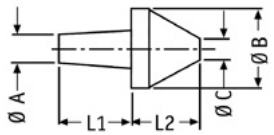	450-00142	L	3	27	35	-	10,4	78	46	-
	450-00165	L	4	29	35	-	12	78	46	-
	450-00188	L	5	30	35	-	17,2	78	46	-

TECHNICAL DATA INTERCHANGEABLE POINTS FOR SERIE-K1

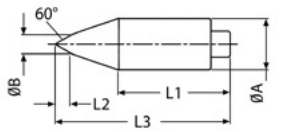

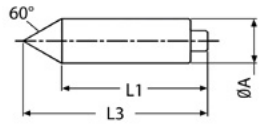

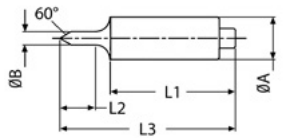

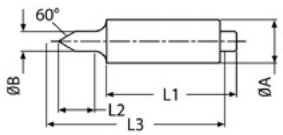

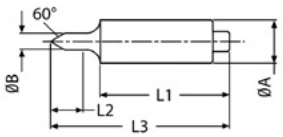

CODE N.	FORM	MORSE TAPER	L1	L2	L3	A	B
450-00203	A	CM3/DIAM22	34	5	54	13	6
450-00213	A	CM4/DIAM28	35	5	55	16	6
450-00222	A	CM5/DIAM32	32	5	57	21	6
450-00202	B	CM3/DIAM22	42	-	54	13	-
450-00212	B	CM4/DIAM28	41	-	55	16	-
450-00221	B	CM5/DIAM32	38	-	57	21	-
450-00206	C	CM3/DIAM22	39	11	54	13	4
450-00216	C	CM4/DIAM28	38	11	55	16	4
450-00225	C	CM5/DIAM32	37	11	57	21	4
450-00204	D	CM3/DIAM22	39	11	54	13	6
450-00214	D	CM4/DIAM28	38	12	55	16	6
450-00223	D	CM5/DIAM32	37	12	57	21	6
450-00205	E	CM3/DIAM22	39	11	54	13	5
450-00215	E	CM4/DIAM28	38	11	55	16	5
450-00224	E	CM5/DIAM32	37	11	57	21	5

SPRINGS FOR SERIE-K1

SPRINGS	CODE N.	SERIES	Nm
GOLD SPRING	450-00227	CM3/DIAM22	261
	450-00228	CM4/DIAM28	320
	450-00229	CM5/DIAM32	380
GREEN SPRING	450-00237	CM3/DIAM22	61,3
	450-00240	CM4/DIAM28	87,3
	450-00241	CM5/DIAM32	96,4
RED SPRING	450-00234	CM3/DIAM22	24,5
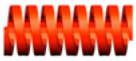	450-00235	CM4/DIAM28	44,4
	450-00236	CM5/DIAM32	34,1
BLUE SPRING	450-00238	CM3/DIAM22	17,8
	450-00239	CM4/DIAM28	25,8
	450-00233	CM5/DIAM32	23
YELLOW SPRING	450-00230	CM3/DIAM22	9,8
	450-00231	CM4/DIAM28	13,7
	450-00232	CM5/DIAM32	14,1

READY, ALWAYS.

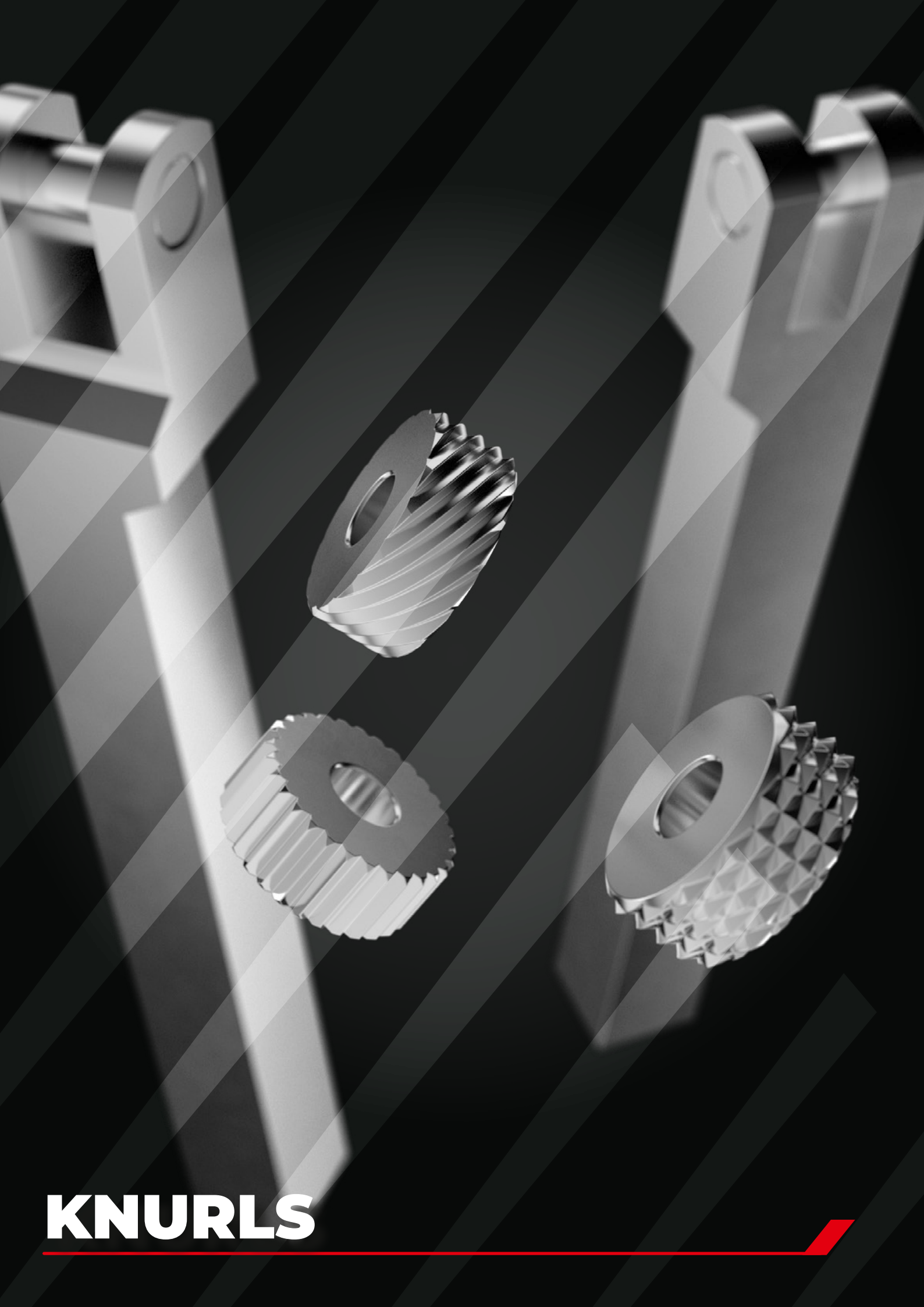

KNURLS

SQUARE SHANK KNURLING-WHEEL HOLDERS

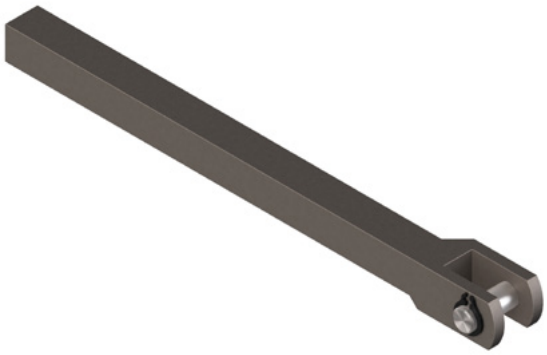

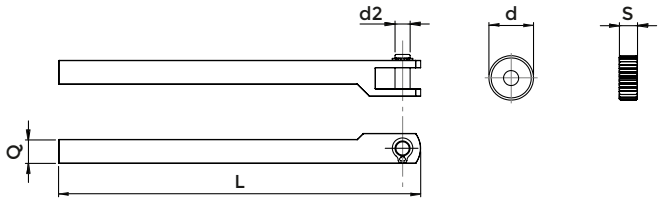

COD.	Q	L	d	d2	S	PIN	KNURL
1280	6 x 6	120	12	4	4	0094	12 x 4 hole ø 4
1281	6 x 6	120	15	5	5	0204	15 x 5 hole ø 5
1282	7 x 7	120	12	4	4	0094	12 x 4 hole ø 4
1283	7 x 7	120	15	5	5	0204	15 x 5 hole ø 5
1284	8 x 8	120	12	4	4	0094	12 x 4 hole ø 4
1285	8 x 8	120	15	5	5	0204	15 x 5 hole ø 5
1352	10 x 10	120	12	4	4	0094	12 x 4 hole ø 4
1286	10 x 10	120	15	5	5	0204	15 x 5 hole ø 5
1410	10 x 10	120	20	6	6	0267	20 x 6 hole ø 6
1287	10 x 10	120	20	6	8	0267	20 x 8 hole ø 6
1411	10 x 10	120	20	6	10	0096	20 x10 hole ø 6
1360	12 x 12	120	15	5	5	0204	15 x 5 hole ø 5
1362	12 x 12	120	20	6	6	0267	20 x 6 hole ø 6
1288	12 x 12	120	20	6	8	0267	20 x 8 hole ø 6
1363	12 x 12	120	20	6	10	0096	20 x10 hole ø 6
1364	16 x 16	120	20	6	8	0267	20 x 8 hole ø 6
1371	16 x 16	120	20	6	10	0267	20 x10 hole ø 6
1381	20 x 20	120	20	6	8	0267	20 x 8 hole ø 6
1461	20 x 20	120	20	6	10	0096	20 x10 hole ø 6

MISALIGNED SQUARE SHANK KNURLING-WHEEL HODERS

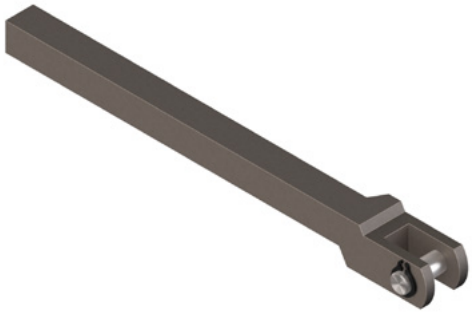

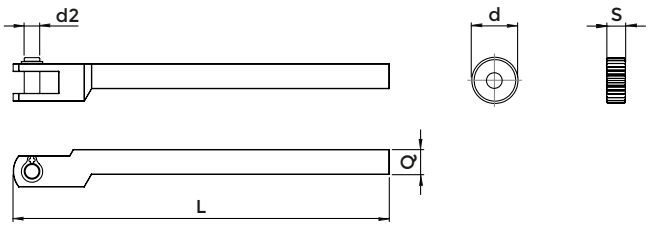

COD.	Q	L	d	d2	S	PIN	KNURL
2112	8 x 8	120	15	5	5	0204	15 x 5 hole ø 5
2113	10 x 10	120	15	5	5	0204	15 x 5 hole ø 5
2114	10 x 10	130	20	6	8	0267	20 x 8 hole ø 6
2115	12 x 12	130	20	6	8	0267	20 x 8 hole ø 6

PINS FOR KNURLING-WHEEL HOLDERS

COD.	d	L
0094	4	14
0204	5	14
0267	6	18
0096	6	20

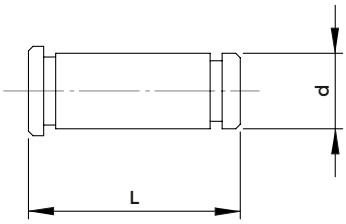

SINTERED STEEL KNURLING WHEELS FOR TRACING WORKING

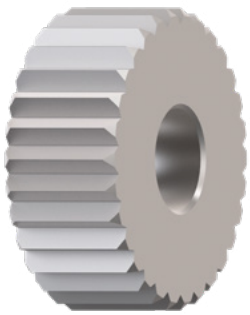

STRAIGHT

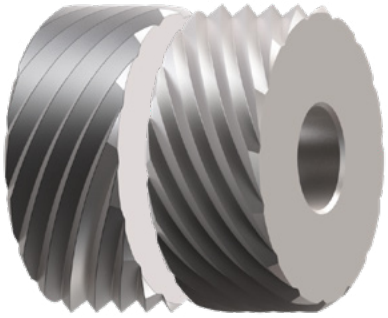

RIGHT 45°/30° LEFT 45°/30°

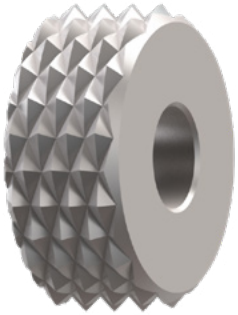

CROSS 45°/30°

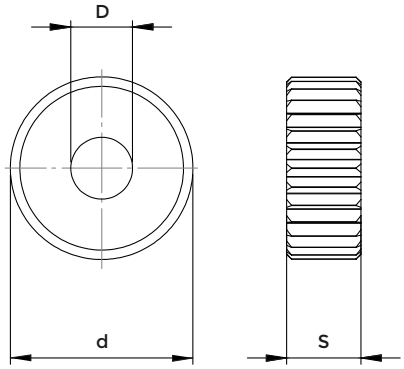

TYPE	DIMENSIONS d x S x D	COD.	STEP
STRAIGHT	8 x 4 x 3	9101	0,4 - 0,5 - 0,6 - 0,7 - 0,8 - 0,9 - 1,0 - 1,2 -1,5
STRAIGHT	10 x 4 x 4	9103	0,4 - 0,5 - 0,6 - 0,7 - 0,8 - 0,9 - 1,0 - 1,2 -1,5
STRAIGHT	12 x 4 x 4	9104	0,5 - 0,6 - 0,7 - 0,8 - 0,9 - 1,0 - 1,2 -1,5
STRAIGHT	15 x 4 x 4	9105	0,5 - 0,6 - 0,7 - 0,8 - 0,9 - 1,0 - 1,2 -1,5
STRAIGHT	15 x 5 x 5	9107	0,5 - 0,6 - 0,7 - 0,8 - 0,9 - 1,0 - 1,2 - 1,5 - 2,0
STRAIGHT	20 x 6 x 6	9108	0,5 - 0,6 - 0,7 - 0,8 - 0,9 - 1,0 - 1,2 - 1,5 - 2,0
STRAIGHT	20 x 8 x 6	9109	0,5 - 0,6 - 0,7 - 0,8 - 0,9 - 1,0 - 1,2 - 1,5 - 2,0
STRAIGHT	20 x 10 x 6	9110	0,5 - 0,6 - 0,7 - 0,8 - 0,9 - 1,0 - 1,2 - 1,5 - 2,0
RIGHT 45°	10 x 4 x 4	9113	0,5 - 0,6 - 0,7 - 0,8 - 0,9 - 1,0 - 1,2 - 1,5
RIGHT 45°	12 x 4 x 4	9114	0,5 - 0,6 - 0,7 - 0,8 - 0,9 - 1,0 - 1,2 - 1,5
RIGHT 45°	15 x 4 x 4	9115	0,5 - 0,6 - 0,7 - 0,8 - 0,9 - 1,0 - 1,2 - 1,5
RIGHT 45°	15 x 5 x 5	9117	0,5 - 0,6 - 0,7 - 0,8 - 0,9 - 1,0 - 1,2 - 1,5
RIGHT 45°	20 x 6 x 6	9118	0,5 - 0,6 - 0,7 - 0,8 - 0,9 - 1,0 - 1,2 - 1,5 - 2,0
RIGHT 45°	20 x 8 x 6	9119	0,5 - 0,6 - 0,7 - 0,8 - 0,9 - 1,0 - 1,2 - 1,5 - 2,0
RIGHT 45°	20 x 10 x 6	9120	0,5 - 0,6 - 0,7 - 0,8 - 0,9 - 1,0 - 1,2 - 1,5 - 2,0
LEFT 45°	10 x 4 x 4	9123	0,5 - 0,6 - 0,7 - 0,8 - 0,9 - 1,0 - 1,2 - 1,5
LEFT 45°	12 x 4 x 4	9124	0,5 - 0,6 - 0,7 - 0,8 - 0,9 - 1,0 - 1,2 - 1,5
LEFT 45°	15 x 4 x 4	9125	0,5 - 0,6 - 0,7 - 0,8 - 0,9 - 1,0 - 1,2 - 1,5
LEFT 45°	15 x 5 x 5	9127	0,5 - 0,6 - 0,7 - 0,8 - 0,9 - 1,0 - 1,2 - 1,5
LEFT 45°	20 x 6 x 6	9128	0,5 - 0,6 - 0,7 - 0,8 - 0,9 - 1,0 - 1,2 - 1,5 - 2,0
LEFT 45°	20 x 8 x 6	9129	0,5 - 0,6 - 0,7 - 0,8 - 0,9 - 1,0 - 1,2 - 1,5 - 2,0
LEFT 45°	20 x 10 x 6	9130	0,5 - 0,6 - 0,7 - 0,8 - 0,9 - 1,0 - 1,2 - 1,5 - 2,0
RIGHT 30°	15 x 4 x 4	9135	0,5 - 0,6 - 0,7 - 0,8 - 0,9 - 1,0 - 1,2 - 1,5 - 2,0
RIGHT 30°	20 x 8 x 6	9139	0,5 - 0,6 - 0,7 - 0,8 - 0,9 - 1,0 - 1,2 - 1,5 - 2,0
LEFT 30°	15 x 4 x 4	9145	0,5 - 0,6 - 0,7 - 0,8 - 0,9 - 1,0 - 1,2 - 1,5 - 2,0
LEFT 30°	20 x 8 x 6	9149	0,5 - 0,6 - 0,7 - 0,8 - 0,9 - 1,0 - 1,2 - 1,5 - 2,0
CROSS 45°	10 x 4 x 4	9153	0,5 - 0,6 - 0,7 - 0,8 - 0,9 - 1,0 - 1,2 - 1,5
CROSS 45°	12 x 4 x 4	9154	0,5 - 0,6 - 0,7 - 0,8 - 0,9 - 1,0 - 1,2 - 1,5
CROSS 45°	15 x 4 x 4	9155	0,5 - 0,6 - 0,7 - 0,8 - 0,9 - 1,0 - 1,2 - 1,5
CROSS 45°	15 x 5 x 5	9157	0,5 - 0,6 - 0,7 - 0,8 - 0,9 - 1,0 - 1,2 - 1,5
CROSS 45°	20 x 6 x 6	9158	0,5 - 0,6 - 0,7 - 0,8 - 0,9 - 1,0 - 1,2 - 1,5 - 2,0
CROSS 45°	20 x 8 x 6	9159	0,5 - 0,6 - 0,7 - 0,8 - 0,9 - 1,0 - 1,2 - 1,5 - 2,0
CROSS 45°	20 x 10 x 6	9160	0,5 - 0,6 - 0,7 - 0,8 - 0,9 - 1,0 - 1,2 - 1,5 - 2,0
CROSS 30°	15 x 4 x 4	9185	0,5 - 0,6 - 0,7 - 0,8 - 0,9 - 1,0 - 1,2 - 1,5 - 2,0
CROSS 30°	20 x 8 x 6	9189	0,5 - 0,6 - 0,7 - 0,8 - 0,9 - 1,0 - 1,2 - 1,5 - 2,0
CROSS 30°	20 x 10 x 6	9190	0,5 - 0,6 - 0,7 - 0,8 - 0,9 - 1,0 - 1,2 - 1,5 - 2,0

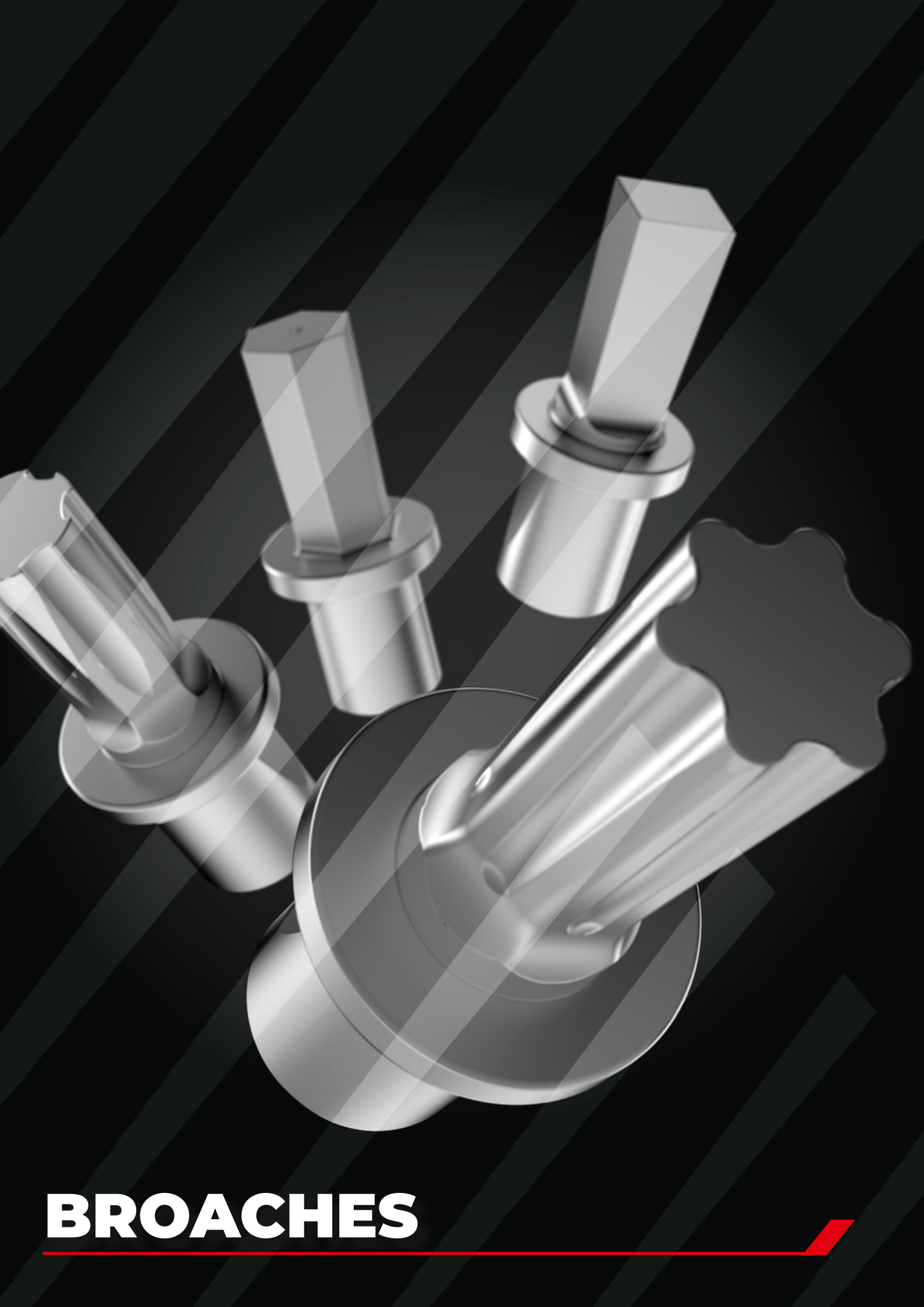

BROACHES

BROACHING HEADS AND BROACHES

TECHNICAL CHARACTERISTICS

The functioning of the broaching head is given by the combination of the inclination of the broach holder body and the rotation of the same. This allows to perform regular profiles both in through holes and in blind holes. With specific broaches it is also possible to create external profiles.
The optimal use of the broaching head derives from the correct alignment of the center of the broach with the center of the hole on which the processing will be carried out. To obtain the alignment of the centers, it is essential to use broaches with the length indicated in the table. The broaching head is adjusted in the factory, so the operator does not have to make any setting.

It can be used on lathes, machining centers and drills.
If it is mounted on lathes, its operation involves the rotation of both the workpiece and the front part of the tool holder, while the body of the broaching head remains stationary.
In the machining centers, both the piece and the front part of the tool holder will be stationary, while the body of the broaching head will rotate.
The rotation speed and advancement are determined by the hardness of the material and the size of the hole. See summary tables on page 558.

Morse Taper Shank

p. 620

VDI Shank

p. 540

Straight Shank

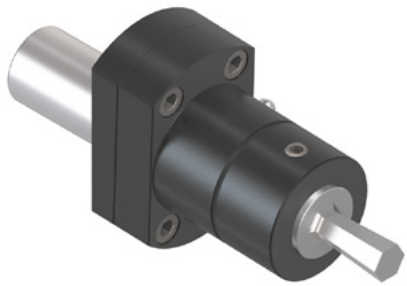

p. 573

STRAIGHT SHANK BROACHING TOOLHOLDERS

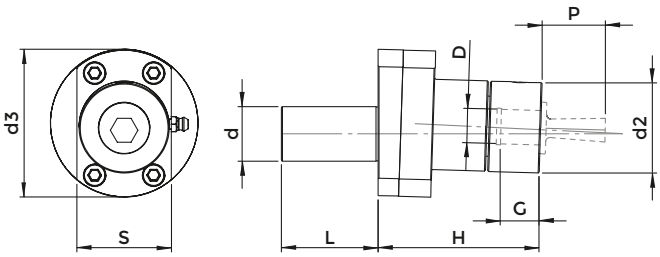

COD.	d	D	P	L	H	G	d2	d3	S
2312	16,00	8	18	35	42	10	22	50	30
2448	19,05	12	25	40	51	16	30	53	36
1680	20,00	12	25	40	51	16	30	53	36
1707	25,00	16	25	45	76	21	42	68	44
2450	25,40	16	25	45	76	21	42	68	44
2709	32,00	16	25	50	76	21	42	68	44
2712	40,00	16	25	50	76	21	42	68	44

For the right broaching toolholder working is important to respect broach P dimension

REDUCTION FOR BROACH SEAT FROM 16 TO 12 SHANK

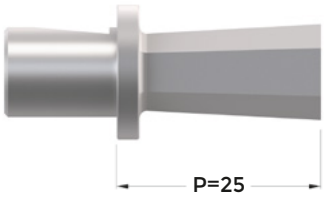

COD.	d	D	G
2351	16	12	20,5

Attention:

reduction can be used only with broach having P=25

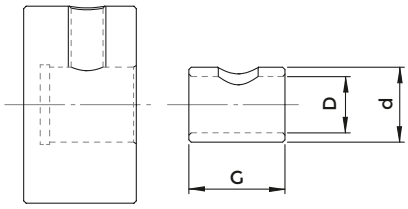

HEXAGONAL BROACHES

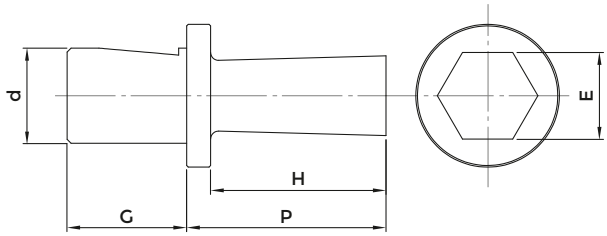

MATERIALS	SHANK D=5					SHANK D=8					SHANK D=12					SHANK D=16					SHANK D=16 EXTENDED P=40				
	COD.					COD.					COD.					COD.					COD.				
HSS	9030					9031					9032					9033					9034				
TiN steel (RM ≤ 850 N/mm²)	9035					9036					9037					9038					9039				
TiAlN steel (RM ≤ 1400 N/mm²)	9040					9041					9042					9043					-				
INOX-PLUS stainless steel - titanium	9045					9046					9047					9048					-				
	E	d	G	P	H	E	d	G	P	H	E	d	G	P	H	E	d	G	P	H	E	d	G	P	H
	1	5	7	10	2	1	8	9	18	2	1	12	15	25	2	1	16	19	25	2	1	16	19	40	2
	1,5	5	7	10	3	1,5	8	9	18	3	1,5	12	15	25	3	1,5	16	19	25	3	1.5	16	19	40	3
	2	5	7	10	4	2	8	9	18	5	2	12	15	25	5	2	16	19	25	5	2	16	19	40	3,5
	2,5	5	7	10	5	2,5	8	9	18	6	2,5	12	15	25	6	2,5	16	19	25	6	2,5	16	19	40	4
	3	5	7	10	6	3	8	9	18	7	3	12	15	25	7	3	16	19	25	7	3	16	19	40	5
	3,5	5	7	10	6	3,5	8	9	18	8	3,5	12	15	25	8	3,5	16	19	25	8	3,5	16	19	40	6
	4	5	7	10	7	4	8	9	18	9	4	12	15	25	9	4	16	19	25	9	4	16	19	40	6,5
	4,5	5	7	10	7	4,5	8	9	18	9	4,5	12	15	25	9	4,5	16	19	25	9	4,5	16	19	40	7
	5	5	7	10	7,5	5	8	9	18	11	5	12	15	25	11	5	16	19	25	11	5	16	19	40	8,5
	5,5	5	7	10	7,5	5,5	8	9	18	11	5,5	12	15	25	11	5,5	16	19	25	11	5,5	16	19	40	9,5
	6	5	7	10	7,5	6	8	9	18	13	6	12	15	25	13	6	16	19	25	13	6	16	19	40	10,5
						7	8	9	18	15	7	12	15	25	15	7	16	19	25	15	7	16	19	40	13
						8	8	9	18	15	8	12	15	25	17	8	16	19	25	17	8	16	19	40	15,5
						9	8	9	18	15	9	12	15	25	19	9	16	19	25	19	9	16	19	40	17,5
						10	8	9	18	15	10	12	15	25	21	10	16	19	25	21	10	16	19	40	18,5
											11	12	15	25	21	11	16	19	25	21	11	16	19	40	20
											12	12	15	25	21	12	16	19	25	21	12	16	19	40	20
											13	12	15	25	21	13	16	19	25	21	13	16	19	40	28
											14	12	15	25	21	14	16	19	25	21	14	16	19	40	32
											15	12	15	25	21	15	16	19	25	21	15	16	19	40	32
											16	12	15	25	21	16	16	19	25	21	16	16	19	40	32
											17	12	15	25	21	17	16	19	25	21	17	16	19	40	32
																18	16	19	25	21	18	16	19	40	32
																19	16	19	25	21	19	16	19	40	32
																20	16	19	25	21	20	16	19	40	32
																22	16	19	25	21	22	16	19	40	32
																24	16	19	25	21	24	16	19	40	32
																25	16	19	25	21	25	16	19	40	32
																26	16	19	25	21	26	16	19	40	32
																27	16	19	25	21	27	16	19	40	32
																28	16	19	25	21	28	16	19	40	32
																29	16	19	25	21	29	16	19	40	32
																30	16	19	25	21	30	16	19	40	32
																31	16	19	25	21	31	16	19	40	32
																32	16	19	25	21	32	16	19	40	32

SQUARE BROACHES

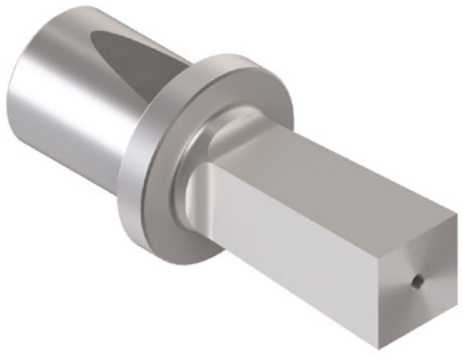

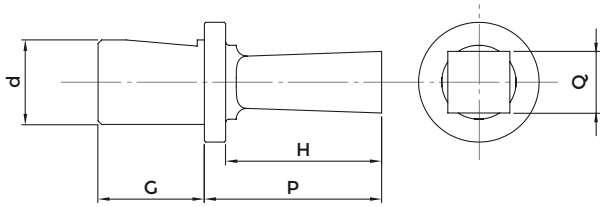

MATERIALS	SHANK D=5					SHANK D=8					SHANK D=12					SHANK D=16					SHANK D=16 EXTENDED P=40				
	COD.					COD.					COD.					COD.					COD.				
HSS	9050					9051					9052					9053					9054				
TiN steel (RM ≤ 850 N/mm²)	9055					9056					9057					9058					9059				
TiAlN steel (RM ≤ 1400 N/mm²)	9060					9061					9062					9063					-				
INOX-PLUS stainless steel - titanium	9065					9066					9067					9068					-				
	Q	d	G	P	H	Q	d	G	P	H	Q	d	G	P	H	Q	d	G	P	H	Q	d	G	P	H
	1	5	7	10	2	1	8	9	18	2	1	12	15	25	2	1	16	19	25	2	1	16	19	40	2
	1,5	5	7	10	3	1,5	8	9	18	3	1,5	12	15	25	3	1,5	16	19	25	3	1,5	16	19	40	3
	2	5	7	10	4	2	8	9	18	5	2	12	15	25	5	2	16	19	25	5	2	16	19	40	3,5
	2,5	5	7	10	5	2,5	8	9	18	6	2,5	12	15	25	6	2,5	16	19	25	6	2,5	16	19	40	4
	3	5	7	10	6	3	8	9	18	7	3	12	15	25	7	3	16	19	25	7	3	16	19	40	5
	3,5	5	7	10	6	3,5	8	9	18	8	3,5	12	15	25	8	3,5	16	19	25	8	3,5	16	19	40	6
	4	5	7	10	7	4	8	9	18	9	4	12	15	25	9	4	16	19	25	9	4	16	19	40	6,5
						4,5	8	9	18	9	4,5	12	15	25	9	4,5	16	19	25	9	4,5	16	19	40	7
						5	8	9	18	11	5	12	15	25	11	5	16	19	25	11	5	16	19	40	8,5
						5,5	8	9	18	11	5,5	12	15	25	11	5,5	16	19	25	11	5,5	16	19	40	9,5
						6	8	9	18	13	6	12	15	25	13	6	16	19	25	13	6	16	19	40	10,5
						7	8	9	18	15	7	12	15	25	15	7	16	19	25	15	7	16	19	40	13
						8	8	9	18	15	8	12	15	25	17	8	16	19	25	17	8	16	19	40	15,5
											9	12	15	25	19	9	16	19	25	19	9	16	19	40	17,5
											10	12	15	25	21	10	16	19	25	21	10	16	19	40	18,5
											11	12	15	25	21	11	16	19	25	21	11	16	19	40	20
											12	12	15	25	21	12	16	19	25	21	12	16	19	40	20
											13	12	15	25	21	13	16	19	25	21	13	16	19	40	28
											14	12	15	25	21	14	16	19	25	21	14	16	19	40	32
																15	16	19	25	21	15	16	19	40	32
																16	16	19	25	21	16	16	19	40	32
																17	16	19	25	21	17	16	19	40	32
																18	16	19	25	21	18	16	19	40	32
																19	16	19	25	21	19	16	19	40	32
																20	16	19	25	21	20	16	19	40	32
																22	16	19	25	21	22	16	19	40	32
																24	16	19	25	21	24	16	19	40	32
																25	16	19	25	21	25	16	19	40	32
																26	16	19	25	21	26	16	19	40	32
																27	16	19	25	21	27	16	19	40	32
																28	16	19	25	21	28	16	19	40	32
																29	16	19	25	21	29	16	19	40	32
																30	16	19	25	21	30	16	19	40	32
																31	16	19	25	21	31	16	19	40	32
																32	16	19	25	21	32	16	19	40	32

TORX® BROACHES

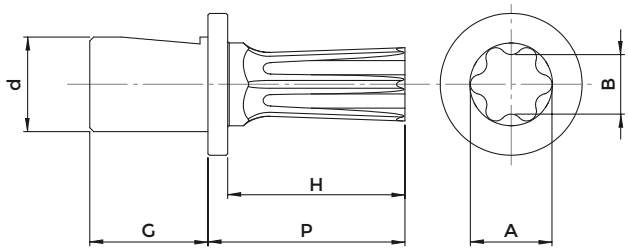

MATERIALS	SHANK D=5	SHANK D=8	SHANK D=12	SHANK D=16	SHANK D=16 EXTENDED P=40
	COD.	COD.	COD.	COD.	COD.
HSS	9029	9070	9071	9072	9073
TiN steel (RM ≤ 850 N/mm²)	9074	9075	9076	9077	9078
TiAlN steel (RM ≤ 1400 N/mm²)	9079	9080	9081	9082	-
INOX-PLUS stainless steel - titanium	9084	9085	9086	9087	-

TORX	d	G	P	H
3	5	7	10	1,2
4	5	7	10	1,2
5	5	7	10	1,5
6	5	7	10	1,7
7	5	7	10	1,7
8	5	7	10	2
9	5	7	10	2
10	5	7	10	2
15	5	7	10	3
20	5	7	10	3,5

TORX	d	G	P	H
3	8	9	18	1,2
4	8	9	18	1,2
5	8	9	18	1,5
6	8	9	18	1,7
7	8	9	18	1,7
8	8	9	18	2
9	8	9	18	2
10	8	9	18	2
15	8	9	18	3
20	8	9	18	3,5
25	8	9	18	4
27	8	9	18	4
30	8	9	18	4,5
40	8	9	18	5

TORX	d	G	P	H
3	12	15	25	1,2
4	12	15	25	1,2
5	12	15	25	1,5
6	12	15	25	1,7
7	12	15	25	1,7
8	12	15	25	2
9	12	15	25	2
10	12	15	25	2
15	12	15	25	3
20	12	15	25	3,5
25	12	15	25	4
27	12	15	25	4
30	12	15	25	4,5
40	12	15	25	5
45	12	15	25	5,5
50	12	15	25	6
55	12	15	25	7

TORX	d	G	P	H
3	16	19	25	1,2
4	16	19	25	1,2
5	16	19	25	1,5
6	16	19	25	1,7
7	16	19	25	1,7
8	16	19	25	2
9	16	19	25	2
10	16	19	25	2
15	16	19	25	3
20	16	19	25	3,5
25	16	19	25	4
27	16	19	25	4
30	16	19	25	4,5
40	16	19	25	5
45	16	19	25	5,5
50	16	19	25	6
55	16	19	25	7
60	16	19	25	7,5

TORX	d	G	P	H
3	16	19	40	1,2
4	16	19	40	1,2
5	16	19	40	1,5
6	16	19	40	1,7
7	16	19	40	1,7
8	16	19	40	2
9	16	19	40	2
10	16	19	40	2
15	16	19	40	3
20	16	19	40	3,5
25	16	19	40	4
27	16	19	40	4
30	16	19	40	4,5
40	16	19	40	5
45	16	19	40	5,5
50	16	19	40	6
55	16	19	40	7
60	16	19	40	7,5

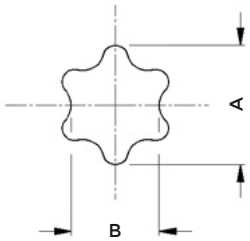

Torx®	3	4	5	6	7	8	9	10	15	20	25	27	30	40	45	50	55	60
A	1,214	1,374	1,449	1,778	2,095	2,418	2,603	2,844	3,378	3,962	4,559	5,118	5,651	6,807	7,975	8,991	11,404	13,487
B	0,884	0,996	1,097	1,293	1,521	1,755	1,889	2,057	2,438	2,857	3,226	3,672	4,065	4,889	5,689	6,502	8,009	9,677

TORX PLUS® BROACHES

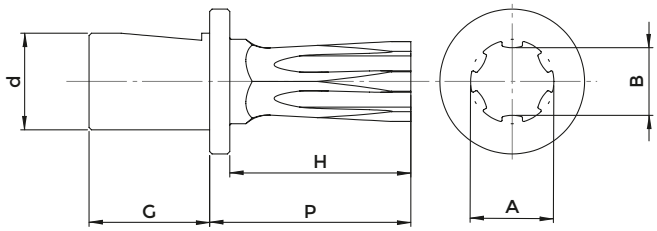

MATERIALS	SHANK D=5					SHANK D=8					SHANK D=12					SHANK D=16					SHANK D=16 EXTENDED P=40				
	COD.					COD.					COD.					COD.					COD.				
HSS	9089					9090					9091					9092					9093				
TiN steel (RM ≤ 850 N/mm²)	9094					9095					9096					9097					9098				
TiAlN steel (RM ≤ 1400 N/mm²)	9776					9777					9778					9779					-				
INOX-PLUS stainless steel - titanium	9781					9782					9783					9784					-				
	TORX PLUS	d	G	P	H	TORX PLUS	d	G	P	H	TORX PLUS	d	G	P	H	TORX PLUS	d	G	P	H	TORX PLUS	d	G	P	H
	6	5	7	10	1,7	6	8	9	18	1,7	6	12	15	25	1,7	-	-	-	-	-	-	-	-	-	-
	7	5	7	10	1,7	7	8	9	18	1,7	7	12	15	25	1,7	-	-	-	-	-	-	-	-	-	-
	8	5	7	10	2	8	8	9	18	2	8	12	15	25	2	-	-	-	-	-	-	-	-	-	-
	9	5	7	10	2	9	8	9	18	2	9	12	15	25	2	-	-	-	-	-	-	-	-	-	-
	10	5	7	10	2	10	8	9	18	2	10	12	15	25	2	10	16	19	25	2	10	16	19	40	2
	15	5	7	10	3	15	8	9	18	3	15	12	15	25	3	15	16	19	25	3	15	16	19	40	3
	20	5	7	10	3,5	20	8	9	18	3,5	20	12	15	25	3,5	20	16	19	25	3,5	20	16	19	40	3,5
						25	8	9	18	4	25	12	15	25	4	25	16	19	25	4	25	16	19	40	4
						27	8	9	18	4	27	12	15	25	4	27	16	19	25	4	27	16	19	40	4
						30	8	9	18	4,5	30	12	15	25	4,5	30	16	19	25	4,5	30	16	19	40	4,5
						40	8	9	18	5	40	12	15	25	5	40	16	19	25	5	40	16	19	40	5
											45	12	15	25	5,5	45	16	19	25	5,5	45	16	19	40	5,5
											50	12	15	25	6	50	16	19	25	6	50	16	19	40	6
											55	12	15	25	7	55	16	19	25	7	55	16	19	40	7
																60	16	19	25	7,5	60	16	19	40	7,5

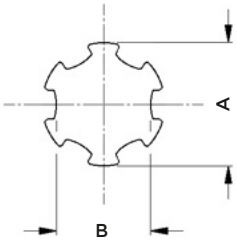

Torx Plus®	6	7	8	9	10	15	20	25	27	30	40	45	50	55	60
A	1,778	2,095	2,418	2,603	2,844	3,378	3,962	4,559	5,118	5,651	6,807	7,975	8,991	11,385	13,442
B	1,381	1,606	1,86	2,014	2,174	2,606	3,088	3,492	3,99	4,391	5,283	6,141	6,923	8,766	10,35

BROACHES USAGE PARAMETERS

Use cooling while broaching			FEED (rpm)								
			Hexagonal			Squadre			TORX® TORX PLUS®		
MATERIAL TO WORK (N/mm²)		Speed (RPM)	1 ÷ 12	13 ÷ 23	24 ÷ 40	1 ÷ 10	11 ÷ 20	21 ÷ 25	T3 ÷ T6	T7 ÷ T27 IP6 ÷ IP27	T30 ÷ T70 IP30 ÷ IP70
brass	Rm <350	600 / 1800	0,1	0,07	0,04	0,08	0,06	0,04	0,1	0,09	0,07
copper	Rm <350	700 / 1900	0,12	0,09	0,05	0,1	0,08	0,06	0,12	0,11	0,09
alluminium	Rm <500	700 / 2000	0,10 - 0,14	0,07 - 0,10	0,04 - 0,06	0,08 - 0,12	0,05 - 0,08	0,02 - 0,04	0,14	0,12 - 0,13	0,09 - 0,12
steel	Rm <700	650 / 1800	0,1	0,08	0,05	0,06	0,04	0,02	0,1	0,09	0,07
steel	Rm 700 - 850	600 / 1600	0,08	0,06	0,04	0,05	0,03	0,02	0,08	0,07	0,05
steel	Rm 850 - 1250	500 / 1400	0,05	0,02	0,01	0,02	0,02	0,01	0,05	0,04	0,03
steel	Rm 1250 - 1400	400 / 1200	0,02	0,015	0,01	0,02	0,015	0,01	0,03	0,02	0,02
stainless steel	Rm <900	600 / 1600	0,08	0,06	0,04	0,05	0,04	0,02	0,08	0,07	0,06
stainless steel	Rm >900	500 / 1200	0,04	0,03	0,02	0,03	0,02	0,01	0,045	0,04	0,03
titanium	Rm >700	450 / 1200	0,03	0,02	0,01	0,02	0,02	0,01	0,035	0,03	0,02
cast iron	Rm <600	650 / 1800	0,1	0,06	0,03	0,08	0,05	0,03	0,1	0,09	0,06

HEXAGONAL Broach	PRE-HOLE
1	ø 1,05 +0,10/0
1,5	ø 1,55 +0,10/0
2	ø 2,10 +0,10/0
2,5	ø 2,60 +0,10/0
3	ø 3,10 +0,10/0
4	ø 4,15 +0,10/0
5	ø 5,15 +0,10/0
6	ø 6,20 +0,10/0
7	ø 7,20 +0,15/0
8	ø 8,25 +0,15/0
9	ø 9,25 +0,15/0
10	ø 10,30 +0,15/0
12	ø 12,35 +0,15/0
13	ø 13,40 +0,15/0
14	ø 14,40 +0,15/0
15	ø 15,45 +0,20/0
16	ø 16,45 +0,20/0
17	ø 17,50 +0,20/0
18	ø 18,55 +0,20/0
19	ø 19,55 +0,20/0
20	ø 20,60 +0,20/0
22	ø 22,65 +0,20/0
24	ø 24,70 +0,20/0
27	ø 27,80 +0,25/0
30	ø 30,90 +0,25/0
32	ø 33,20 +0,25/0

SQUARE Broach	PRE-HOLE
1	ø 1,15 +0,10/0
2	ø 2,20 +0,10/0
3	ø 3,30 +0,10/0
4	ø 4,40 +0,10/0
5	ø 5,50 +0,10/0
6	ø 6,60 +0,10/0
7	ø 7,70 +0,15/0
8	ø 8,80 +0,15/0
9	ø 9,90 +0,15/0
10	ø 11,00 +0,20/0
11	ø 12,10 +0,20/0
12	ø 13,20 +0,20/0
13	ø 14,30 +0,20/0
14	ø 15,40 +0,20/0
15	ø 16,50 +0,20/0
16	ø 17,60 +0,20/0
17	ø 18,70 +0,20/0
18	ø 19,80 +0,20/0
19	ø 20,90 +0,20/0
20	ø 22,00 +0,20/0
21	ø 23,10 +0,25/0
22	ø 24,20 +0,25/0
23	ø 25,30 +0,25/0
24	ø 26,40 +0,25/0
25	ø 27,50 +0,25/0

TORX® Broach	PRE-HOLE
T 3	ø 0,95 +0,05/0
T 4	ø 1,05 +0,05/0
T 5	ø 1,20 +0,05/0
T 6	ø 1,40 +0,10/0
T 7	ø 1,60 +0,10/0
T 8	ø 1,90 +0,10/0
T 9	ø 1,95 +0,10/0
T 10	ø 2,20 +0,10/0
T 15	ø 2,60 +0,10/0
T 20	ø 3,00 +0,10/0
T 25	ø 3,40 +0,10/0
T 27	ø 3,80 +0,10/0
T 30	ø 4,15 +0,10/0
T 40	ø 5,00 +0,15/0
T 45	ø 5,80 +0,15/0
T 50	ø 6,70 +0,20/0
T 55	ø 8,20 +0,20/0
T 60	ø 9,85 +0,20/0

TORX PLUS® Broach	PRE-HOLE
IP 6	ø 1,50 +0,10/0
IP 8	ø 1,95 +0,10/0
IP 9	ø 2,10 +0,10/0
IP 10	ø 2,30 +0,10/0
IP 15	ø 2,70 +0,10/0
IP 20	ø 3,20 +0,10/0
IP 25	ø 3,60 +0,10/0
IP 27	ø 4,10 +0,10/0
IP 30	ø 4,50 +0,10/0
IP 40	ø 5,40 +0,10/0
IP 45	ø 6,40 +0,10/0
IP 50	ø 7,10 +0,10/0
IP 55	ø 9,20 +0,10/0
IP 60	ø 10,60 +0,20/0

Pre-hole depth must be at least 20% greater than the one of the profile to execute.
To facilitate the processing it is recommended to perform an entrance chamfer.

READY, ALWAYS.

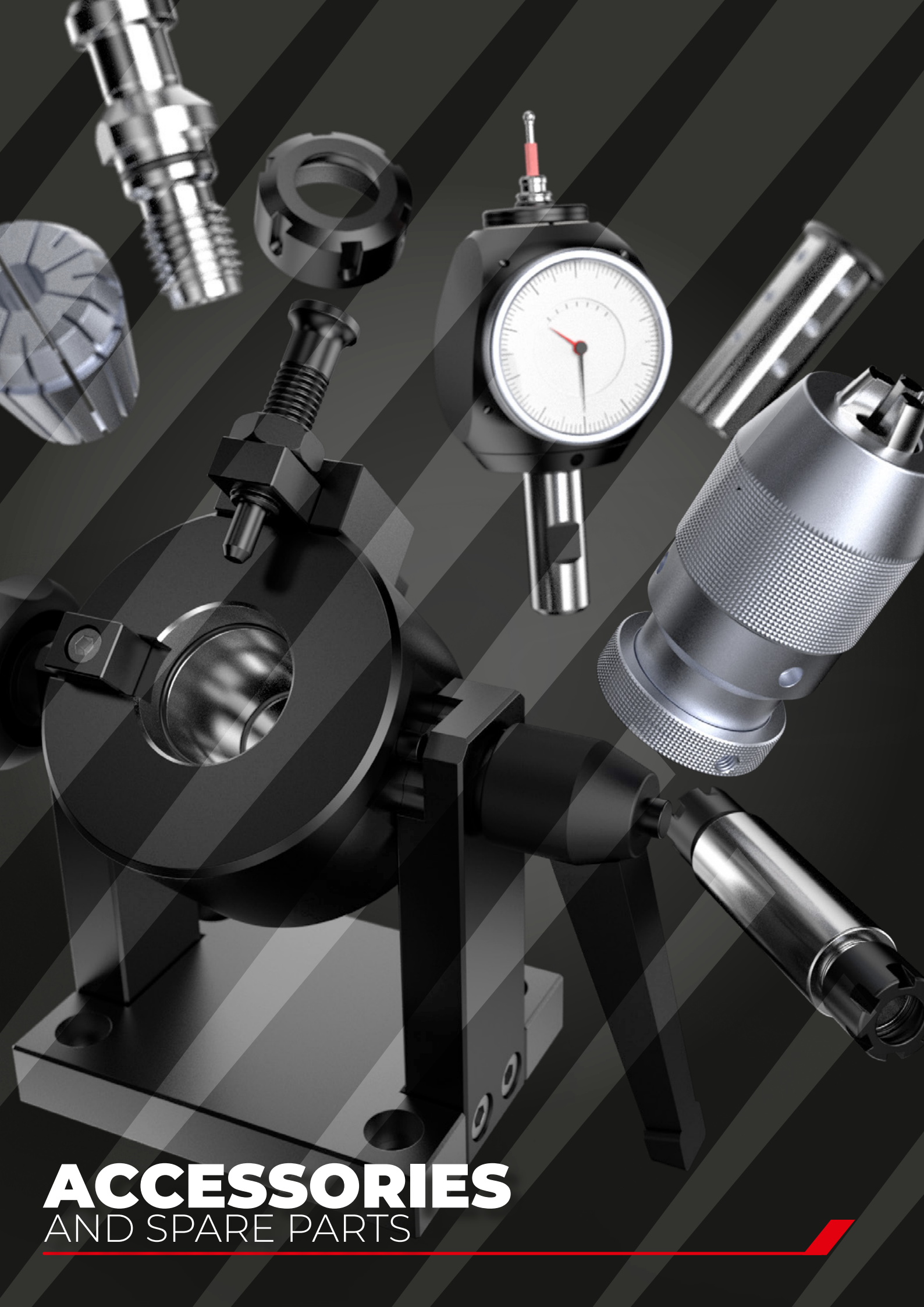

ACCESSORIES
AND SPARE PARTS

STRAIGHT SHANK ER COLLET CHUCKS WITH MINI NUT

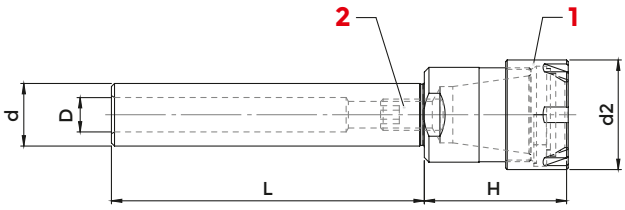

DIN 1835A

COD. (WITHOUT FLAT)	COD. (WITH FLAT)	DESCRIPTION	d	ER	H	d2	D	2 NUT	1 SCREW	WRENCH	COLLET
264-35114	-	d 5 - ER 8 GM / L 45	5	ER 8 1÷ 5	24	12	-	0373	-	816-203007	ER8
214-35101	-	d 6 - ER 8 GM / L 45	6	ER 8 1÷ 5	24	12	-	0373	-	816-203007	ER8
214-35139	-	d 6 - ER11 GM / L 45	6	ER 11 1÷ 8	25	16	-	0432	-	816-203008	ER11
264-35115	-	d 7 - ER11 GM / L 45	7	ER 11 1÷ 8	25	16	-	0432	-	816-203008	ER11
214-35102	-	d 8 - ER 8 GM / L 55	8	ER 8 1÷ 5	24	12	-	0373	-	816-203007	ER8
214-35108	-	d 8 - ER 8 GM / L 80	8	ER 8 1÷ 5	24	12	-	0373	-	816-203007	ER8
214-35714	-	d 8 - ER 8 GM / L 100	8	ER 8 1÷ 5	24	12	-	0373	-	816-203007	ER8
214-35715	-	d 8 - ER 8 GM / L 130	8	ER 8 1÷ 5	24	12	-	0373	-	816-203007	ER8
214-35109	-	d 8 - ER11 GM / L 55	8	ER 11 1÷ 8	25	16	-	0432	-	816-203008	ER11
264-35116	-	d 8 - ER11 GM / L 100	8	ER 11 1÷ 8	25	16	-	0432	-	816-203008	ER11
214-35716	-	d 8 - ER16 GM / L 55	8	ER 16 1÷12	37	22	-	1229	-	816-203009	ER16
214-35717	-	d 8 - ER16 GM / L 100	8	ER 16 1÷12	37	22	-	1229	-	816-203009	ER16
264-35117	-	d 10 - ER 8 GM / L 55	10	ER 8 1÷ 5	24	12	-	0373	811-102113	816-203007	ER8
214-35718	-	d 10 - ER 8 GM / L 80	10	ER 8 1÷ 5	24	12	-	0373	811-102113	816-203007	ER8
264-35118	-	d 10 - ER 8 GM / L 100	10	ER 8 1÷ 5	24	12	-	0373	811-102113	816-203007	ER8
214-35719	-	d 10 - ER 8 GM / L 130	10	ER 8 1÷ 5	24	12	-	0373	811-102113	816-203007	ER8
214-35110	-	d 10 - ER11 GM / L 55	10	ER 11 1÷ 8	25	16	5	0432	811-102113	816-203008	ER11
214-35720	-	d 10 - ER11 GM / L 80	10	ER 11 1÷ 8	25	16	5	0432	811-102113	816-203008	ER11
264-35119	-	d 10 - ER11 GM / L 100	10	ER 11 1÷ 8	25	16	5	0432	811-102113	816-203008	ER11
214-35721	-	d 10 - ER11 GM / L 130	10	ER 11 1÷ 8	25	16	5	0432	811-102113	816-203008	ER11
214-35113	-	d 10 - ER16 GM / L 60	10	ER 16 1÷12	37	22	5	1229	811-102113	816-203009	ER16
214-35722	-	d 10 - ER16 GM / L 80	10	ER 16 1÷12	37	22	5	1229	811-102113	816-203009	ER16
264-35120	-	d 10 - ER16 GM / L 100	10	ER 16 1÷12	37	22	5	1229	811-102113	816-203009	ER16
214-35723	-	d 12 - ER 8 GM / L 55	12	ER 8 1÷ 5	15	12	5	0373	811-102113	816-203007	ER8
214-35724	-	d 12 - ER 8 GM / L 70	12	ER 8 1÷ 5	15	12	5	0373	811-102113	816-203007	ER8
214-35140	-	d 12 - ER 8 GM / L 100	12	ER 8 1÷ 5	15	12	5	0373	811-102113	816-203007	ER8
264-35121	-	d 12 - ER 8 GM / L 140	12	ER 8 1÷ 5	15	12	5	0373	811-102113	816-203007	ER8
264-35122	-	d 12 - ER11 GM / L 55	12	ER 11 1÷ 8	25	16	7	0432	811-102114	816-203008	ER11
214-35141	-	d 12 - ER11 GM / L 70	12	ER 11 1÷ 8	25	16	7	0432	811-102114	816-203008	ER11
214-35142	-	d 12 - ER11 GM / L 100	12	ER 11 1÷ 8	25	16	7	0432	811-102114	816-203008	ER11
214-35143	-	d 12 - ER11 GM / L 140	12	ER 11 1÷ 8	25	16	7	0432	811-102114	816-203008	ER11
264-35123	-	d 12 - ER16 GM / L 55	12	ER 16 1÷12	37	22	7	1229	811-102114	816-203009	ER16
214-35114	-	d 12 - ER16 GM / L 80	12	ER 16 1÷12	37	22	7	1229	811-102114	816-203009	ER16
264-35124	-	d 12 - ER16 GM / L 120	12	ER 16 1÷12	37	22	7	1229	811-102114	816-203009	ER16
264-35125	-	d 15 - ER20 GM / L 100	15	ER 20 1÷15	41	28	9	1230	811-102030	816-203010	ER20
264-35126	0214	d 16 - ER11 GM / L 40	16	ER 11 1÷ 8	22	16	7	0432	811-102114	816-203008	ER11
214-35725	0292	d 16 - ER11 GM / L 60	16	ER 11 1÷ 8	22	16	7	0432	811-102114	816-203008	ER11
264-35127	0441	d 16 - ER11 GM / L 80	16	ER 11 1÷ 8	22	16	7	0432	811-102114	816-203008	ER11

follows >>

STRAIGHT SHANK ER COLLET CHUCKS WITH MINI NUT

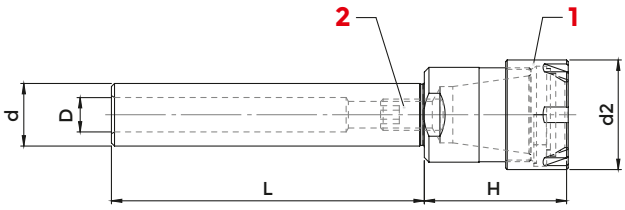

DIN 1835A

COD. (WITHOUT FLAT)	COD. (WITH FLAT)	DESCRIPTION	d	ER	H	d2	D	1 NUT	2 SCREW	WRENCH	COLLET
264-35128	2963	d 16 - ER11 GM / L 100	16	ER 11 1÷ 8	22	16	7	0432	811-102114	816-203008	ER11
264-35129	3903	d 16 - ER11 GM / L 130	16	ER 11 1÷ 8	22	16	7	0432	811-102114	816-203008	ER11
264-35130	D16H160ER11M	d 16 - ER11 GM / L 160	16	ER 11 1÷ 8	22	16	7	0432	811-102114	816-203008	ER11
214-35726	3913	d 16 - ER11 GM / L 200	16	ER 11 1÷ 8	22	16	7	0432	811-102114	816-203008	ER11
264-35131	2591	d 16 - ER16 GM / L 35	16	ER 16 1÷12	37	22	7	1229	811-102114	816-203009	ER16
264-35132	3211	d 16 - ER16 GM / L 60	16	ER 16 1÷12	37	22	7	1229	811-102114	816-203009	ER16
214-35115	3212	d 16 - ER16 GM / L 80	16	ER 16 1÷12	37	22	7	1229	811-102114	816-203009	ER16
214-35145	3226	d 16 - ER16 GM / L 100	16	ER 16 1÷12	37	22	7	1229	811-102114	816-203009	ER16
214-35146	3393	d 16 - ER16 GM / L 130	16	ER 16 1÷12	37	22	7	1229	811-102114	816-203009	ER16
214-35147	3490	d 16 - ER16 GM / L 160	16	ER 16 1÷12	37	22	7	1229	811-102114	816-203009	ER16
214-35727	2005	d 16 - ER16 GM / L 200	16	ER 16 1÷12	37	22	7	1229	811-102114	816-203009	ER16
264-35133	2895	d 16 - ER20 GM / L 55	16	ER 20 1÷15	40	28	9	1230	811-102030	816-203010	ER20
214-35148	3213	d 16 - ER20 GM / L 100	16	ER 20 1÷15	40	28	9	1230	811-102030	816-203010	ER20
264-35134	2982	d 16 - ER20 GM / L 130	16	ER 20 1÷15	40	28	9	1230	811-102030	816-203010	ER20
264-35135	2983	d 16 - ER20 GM / L 160	16	ER 20 1÷15	40	28	9	1230	811-102030	816-203010	ER20
-	214-35728	d 19,05 - ER11GM / L 50	19,05	ER 11 1÷ 8	18	16	7	0432	811-102114	816-203008	ER11
-	214-35729	d 19,05 - ER11GM / L 100	19,05	ER 11 1÷ 8	18	16	7	0432	811-102114	816-203008	ER11
-	214-35730	d 19,05 - ER16GM / L 60	19,05	ER 16 1÷12	30	22	11	1229	811-102038	816-203009	ER16
-	214-35731	d 19,05 - ER16GM / L 100	19,05	ER 16 1÷12	30	22	11	1229	811-102038	816-203009	ER16
-	214-35732	d 19,05 - ER20GM / L 50	19,05	ER 20 1÷15	37	28	11	1230	811-102038	816-203010	ER20
-	214-35733	d 19,05 - ER20GM / L 100	19,05	ER 20 1÷15	37	28	11	1230	811-102038	816-203010	ER20
-	214-35734	d 19,05 - ER25GM / L 50	19,05	ER 25 1÷20	46	35	11	1231	811-102038	816-203011	ER25
0216SP	264-35136	d 20 - ER11 GM / L 50	20	ER 11 1÷ 8	22	16	7	0432	811-102114	816-203008	ER11
1222SP	264-35137	d 20 - ER11 GM / L 100	20	ER 11 1÷ 8	22	16	7	0432	811-102114	816-203008	ER11
214-35736SP	214-35736	d 20 - ER11 GM / L 130	20	ER 11 1÷ 8	22	16	7	0432	811-102114	816-203008	ER11
2043SP	214-35737	d 20 - ER11 GM / L 160	20	ER 11 1÷ 8	22	16	7	0432	811-102114	816-203008	ER11
5144SP	214-35738	d 20 - ER11 GM / L 200	20	ER 11 1÷ 8	22	16	7	0432	811-102114	816-203008	ER11
214-35149SP	214-35149	d 20 - ER16 GM / L 60	20	ER 16 1÷12	30	22	11	1229	811-102038	816-203009	ER16
214-35150SP	214-35150	d 20 - ER16 GM / L 100	20	ER 16 1÷12	30	22	11	1229	811-102038	816-203009	ER16
264-35138SP	264-35138	d 20 - ER16 GM / L 130	20	ER 16 1÷12	30	22	11	1229	811-102038	816-203009	ER16
214-35151SP	214-35151	d 20 - ER16 GM / L 160	20	ER 16 1÷12	30	22	11	1229	811-102038	816-203009	ER16
264-35139SP	264-35139	d 20 - ER16 GM / L 200	20	ER 16 1÷12	30	22	11	1229	811-102038	816-203009	ER16
214-35739SP	214-35739	d 20 - ER16 GM / L 250	20	ER 16 1÷12	30	22	11	1229	811-102038	816-203009	ER16
3215SP	264-35140	d 20 - ER20 GM / L 46	20	ER 20 1÷15	37	28	11	1230	811-102038	816-203010	ER20
214-35152SP	214-35152	d 20 - ER20 GM / L 60	20	ER 20 1÷15	37	28	11	1230	811-102038	816-203010	ER20
214-35111SP	214-35111	d 20 - ER20 GM / L 100	20	ER 20 1÷15	37	28	11	1230	811-102038	816-203010	ER20
214-35153SP	214-35153	d 20 - ER20 GM / L 130	20	ER 20 1÷15	37	28	11	1230	811-102038	816-203010	ER20
214-35154SP	214-35154	d 20 - ER20 GM / L 160	20	ER 20 1÷15	37	28	11	1230	811-102038	816-203010	ER20

follows >>

STRAIGHT SHANK ER COLLET CHUCKS WITH MINI NUT

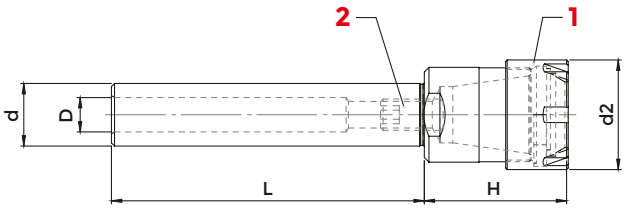

DIN 1835A

COD. (WITHOUT FLAT)	COD. (WITH FLAT)	DESCRIPTION	d	ER	H	d2	D	1 NUT	2 SCREW	WRENCH	COLLET
264-35141SP	264-35141	d 20 - ER20 GM / L 200	20	ER 20 1÷15	37	28	11	1230	811-102038	816-203010	ER20
214-35740SP	214-35740	d 20 - ER20 GM / L 250	20	ER 20 1÷15	37	28	11	1230	811-102038	816-203010	ER20
2899SP	264-35142	d 20 - ER25 GM / L 46	20	ER 25 1÷20	46	35	11	1231	811-102038	816-203011	ER25
214-35155SP	214-35155	d 20 - ER25 GM / L 60	20	ER 25 1÷20	46	35	11	1231	811-102038	816-203011	ER25
214-35116SP	214-35116	d 20 - ER25 GM / L 100	20	ER 25 1÷20	46	35	11	1231	811-102038	816-203011	ER25
214-35156SP	214-35156	d 20 - ER25 GM / L 130	20	ER 25 1÷20	46	35	11	1231	811-102038	816-203011	ER25
3319SP	214-35741	d 20 - ER25 GM / L 160	20	ER 25 1÷20	46	35	11	1231	811-102038	816-203011	ER25
-	214-35742	d 22 - ER16 GM / L 80	22	ER 16 1÷12	27	22	11	1229	811-102038	816-203009	ER16
-	214-35743	d 22 - ER20 GM / L 80	22	ER 20 1÷15	30	28	11	1230	811-102038	816-203010	ER20
0451SP	264-35143	d 25 - ER11 GM / L 100	25	ER 11 1÷ 8	18	16	7	0432	811-102114	816-203008	ER20
5145SP	214-35744	d 25 - ER11 GM / L 130	25	ER 11 1÷ 8	18	16	7	0432	811-102114	816-203008	ER11
5146SP	214-35745	d 25 - ER11 GM / L 160	25	ER 11 1÷ 8	18	16	7	0432	811-102038	816-203008	ER11
0218SP	264-35144	d 25 - ER16 GM / L 60	25	ER 16 1÷12	27	22	11	1229	811-102038	816-203009	ER16
0219SP	214-35157	d 25 - ER16 GM / L 100	25	ER 16 1÷12	27	22	11	1229	811-102038	816-203009	ER16
0231SP	264-35145	d 25 - ER16 GM / L 130	25	ER 16 1÷12	27	22	11	1229	811-102038	816-203009	ER16
3029SP	264-35146	d 25 - ER16 GM / L 160	25	ER 16 1÷12	27	22	11	1229	811-102038	816-203009	ER16
3063SP	214-35746	d 25 - ER16 GM / L 200	25	ER 16 1÷12	27	22	11	1229	811-102038	816-203009	ER16
3907SP	214-35158	d 25 - ER20 GM / L 60	25	ER 20 1÷15	28	28	13	1230	811-106005	816-203010	ER20
214-35159SP	214-35159	d 25 - ER20 GM / L 100	25	ER 20 1÷15	28	28	13	1230	811-106005	816-203010	ER20
0222SP	264-35147	d 25 - ER20 GM / L 130	25	ER 20 1÷15	28	28	13	1230	811-106005	816-203010	ER20
3219SP	214-35160	d 25 - ER20 GM / L 160	25	ER 20 1÷15	28	28	13	1230	811-106005	816-203010	ER20
4004SP	214-35747	d 25 - ER20 GM / L 200	25	ER 20 1÷15	28	28	13	1230	811-106005	816-203010	ER20
264-35148SP	264-35148	d 25 - ER25 GM / L 50	25	ER 25 1÷20	32	35	13	1231	811-106005	816-203011	ER25
3908SP	214-35161	d 25 - ER25 GM / L 70	25	ER 25 1÷20	32	35	13	1231	811-106005	816-203011	ER25
0426SP	264-35149	d 25 - ER25 GM / L 100	25	ER 25 1÷20	32	35	13	1231	811-106005	816-203011	ER25
0446SP	214-35162	d 25 - ER25 GM / L 130	25	ER 25 1÷20	32	35	13	1231	811-106005	816-203011	ER25
264-35150SP	264-35150	d 25 - ER25 GM / L 160	25	ER 25 1÷20	32	35	13	1231	811-106005	816-203011	ER25
0462SP	214-35748	d 25 - ER25 GM / L 200	25	ER 25 1÷20	32	35	13	1231	811-106005	816-203011	ER25
-	214-35749	d 25,4 - ER16 GM / L 60	25,4	ER 16 1÷12	27	22	11	1229	811-102038	816-203009	ER16
-	214-35750	d 25,4 - ER16 GM / L 100	25,4	ER 16 1÷12	27	22	11	1229	811-102038	816-203009	ER16
-	214-35752	d 25,4 - ER20 GM / L 70	25,4	ER 20 1÷15	28	28	13	1230	811-106005	816-203010	ER20
-	214-35753	d 25,4 - ER20 GM / L 100	25,4	ER 20 1÷15	28	28	13	1230	811-106005	816-203010	ER20
-	214-35755	d 25,4 - ER25 GM / L 70	25,4	ER 25 1÷20	32	35	13	1231	811-106005	816-203011	ER25
-	214-35756	d 25,4 - ER25 GM / L 100	25,4	ER 25 1÷20	32	35	13	1231	811-106005	816-203011	ER25
-	264-35151	d 32 - ER16 GM / L 90	32	ER 16 1÷12	30	22	11	1229	811-102038	816-203009	ER16
-	214-35163	d 32 - ER20 GM / L 90	32	ER 20 1÷15	28	28	13	1230	811-106005	816-203010	ER20

ACCESSORIES

p. 648

p. 631

p. 652

STRAIGHT SHANK ER DOUBLE COLLET CHUCKS WITH MINI NUT

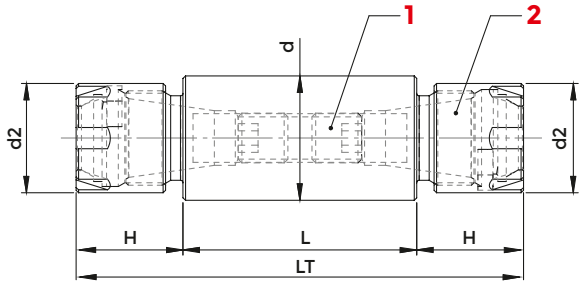

DIN 1835A

COD.	DESCRIPTION	d	H	L	d2	ER	2 NUT	1 SCREW	WRENCH	COLLET
264-35198	d 20 DP - ER 11 GM / L 42	20	14	70	16	ER 11 1÷ 8	0432	811-106015	816-203008	ER11
264-35199	d 20 DP - ER 11 GM / L 52	20	14	80	16	ER 11 1÷ 8	0432	811-102028	816-203008	ER11
214-35702	d 20 DP - ER 11 GM / L 62	20	14	90	16	ER 11 1÷ 8	0432	811-102028	816-203008	ER11
214-35703	d 20 DP - ER 16 GM / L 37	20	21,5	80	22	ER 16 1÷ 12	1229	-	816-203009	ER16
214-35704	d 20 DP - ER 16 GM / L 57	20	21,5	100	22	ER 16 1÷ 12	1229	811-106003	816-203009	ER16
214-35705	d 20 DP - ER 16 GM / L 67	20	21,5	110	22	ER 16 1÷ 12	1229	811-106004	816-203009	ER16
214-35706	d 20 DP - ER 16 GM / L 122	20	21,5	165	22	ER 16 1÷ 12	1229	811-106005	816-203009	ER16
214-35707	d 22 DP - ER 16 GM / L 47	22	21,5	90	22	ER 16 1÷ 12	1229	811-106003	816-203009	ER16
214-35708	d 22 DP - ER 16 GM / L 67	22	21,5	110	22	ER 16 1÷ 12	1229	811-106004	816-203009	ER16
214-35709	d 22 DP - ER 16 GM / L 102	22	21,5	145	22	ER 16 1÷ 12	1229	811-102038	816-203009	ER16
214-35710	d 25 DP - ER 16 GM / L 27	25	21,5	70	22	ER 16 1÷ 12	1229	-	816-203009	ER16
214-35711	d 25 DP - ER 16 GM / L 47	25	21,5	90	22	ER 16 1÷ 12	1229	811-106003	816-203009	ER16
214-35712	d 25 DP - ER 16 GM / L 67	25	21,5	110	22	ER 16 1÷ 12	1229	811-106004	816-203009	ER16
214-35713	d 25 DP - ER 20 GM / L 82	25	24	130	28	ER 20 1÷ 15	1230	811-102038	816-203010	ER20
264-35757	d 32 DP - ER 20 GM / L 57	32	24	105	28	ER 20 1÷ 15	1230	811-106003	816-203010	ER20
264-35758	d 32 DP - ER 20 GM / L 82	32	24	130	28	ER 20 1÷ 15	1230	811-102038	816-203010	ER20

ACCESSORIES

p. 648

p. 631

p. 652

STRAIGHT SHANK ER COLLET CHUCKS WITH HEXAGONAL NUT

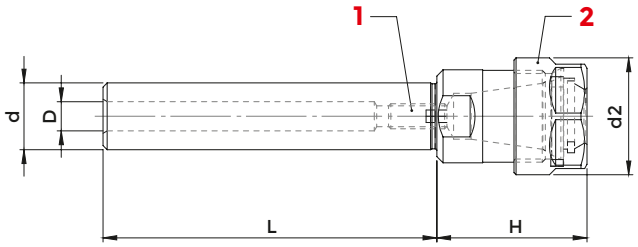

DIN 1835A

COD. (WITHOUT FLAT)	COD. (WITH FLAT)	DESCRIPTION	d	ER	H	d2	D	2 NUT	1 SCREW	WRENCH	COLLET
214-35783	-	d 14 - ER 16 GE / L 60	14	ER 16 1÷12	36	28	7	812-203009	811-102114	816-203012	ER16
214-35784	5245	d 16 - ER 16 GE / L 60	16	ER 16 1÷12	36	28	7	812-203009	811-102114	816-203012	ER16
214-35785	5246	d 16 - ER 16 GE / L 80	16	ER 16 1÷12	36	28	7	812-203009	811-102114	816-203012	ER16
214-35786	5247	d 16 - ER 16 GE / L 100	16	ER 16 1÷12	36	28	7	812-203009	811-102114	816-203012	ER16
214-35787	5248	d 16 - ER 16 GE / L 130	16	ER 16 1÷12	36	28	7	812-203009	811-102114	816-203012	ER16
214-35788	5249	d 16 - ER 16 GE / L 160	16	ER 16 1÷12	36	28	7	812-203009	811-102114	816-203012	ER16
214-35790	5251	d 16 - ER 20 GE / L 60	16	ER 20 1÷15	40	34	9	812-203010	811-102030	816-203013	ER20
-	214-35791	d 19,05 - ER 16 GE / L 50	19,05	ER 16 1÷12	32	28	11	812-203009	811-102038	816-203012	ER16
-	214-35792	d 19,05 - ER 16 GE / L 100	19,05	ER 16 1÷12	32	28	11	812-203009	811-102038	816-203012	ER16
-	214-35793	d 19,05 - ER 20 GE / L 50	19,05	ER 20 1÷15	36	34	11	812-203010	811-102038	816-203013	ER20
5256SP	214-35795	d 20 - ER 16 GE / L 50	20	ER 16 1÷12	31	28	11	812-203009	811-102038	816-203012	ER16
5257SP	214-35796	d 20 - ER 16 GE / L 100	20	ER 16 1÷12	31	28	11	812-203009	811-102038	816-203012	ER16
5258SP	214-35797	d 20 - ER 16 GE / L 130	20	ER 16 1÷12	31	28	11	812-203009	811-102038	816-203012	ER16
5259SP	214-35798	d 20 - ER 16 GE / L 160	20	ER 16 1÷12	31	28	11	812-203009	811-102038	816-203012	ER16
5260SP	214-35799	d 20 - ER 16 GE / L 200	20	ER 16 1÷12	31	28	11	812-203009	811-102038	816-203012	ER16
5261SP	264-35701	d 20 - ER 20 GE / L 46	20	ER 20 1÷15	36	34	11	812-203010	811-102038	816-203013	ER20
5262SP	264-35702	d 20 - ER 20 GE / L 60	20	ER 20 1÷15	36	34	11	812-203010	811-102038	816-203013	ER20
5263SP	264-35703	d 20 - ER 20 GE / L 100	20	ER 20 1÷15	36	34	11	812-203010	811-102038	816-203013	ER20
5264SP	264-35704	d 20 - ER 20 GE / L 130	20	ER 20 1÷15	36	34	11	812-203010	811-102038	816-203013	ER20
5265SP	264-35705	d 20 - ER 20 GE / L 160	20	ER 20 1÷15	36	34	11	812-203010	811-102038	816-203013	ER20
5266SP	264-35706	d 20 - ER 20 GE / L 200	20	ER 20 1÷15	36	34	11	812-203010	811-102038	816-203013	ER20
-	264-35707	d 22 - ER 16 GE / L 80	22	ER 16 1÷12	26	28	11	812-203009	811-102038	816-203012	ER16
-	264-35708	d 22 - ER 20 GE / L 80	22	ER 20 1÷15	36	34	11	812-203010	811-102038	816-203013	ER20
5269SP	264-35709	d 25 - ER 16 GE / L 60	25	ER 16 1÷12	27	28	11	812-203009	811-102038	816-203012	ER16
5270SP	264-35710	d 25 - ER 16 GE / L 100	25	ER 16 1÷12	27	28	11	812-203009	811-102038	816-203012	ER16
5271SP	264-35711	d 25 - ER 16 GE / L 130	25	ER 16 1÷12	27	28	11	812-203009	811-102038	816-203012	ER16
-	264-35712	d 25 - ER 16 GE / L 160	25	ER 16 1÷12	27	28	11	812-203009	811-102038	816-203012	ER16
5274SP	264-35714	d 25 - ER 20 GE / L 60	25	ER 20 1÷15	28	34	13	812-203010	811-106005	816-203013	ER20
5275SP	264-35715	d 25 - ER 20 GE / L 100	25	ER 20 1÷15	28	34	13	812-203010	811-106005	816-203013	ER20

follows >>

STRAIGHT SHANK ER COLLET CHUCKS WITH HEXAGONAL NUT

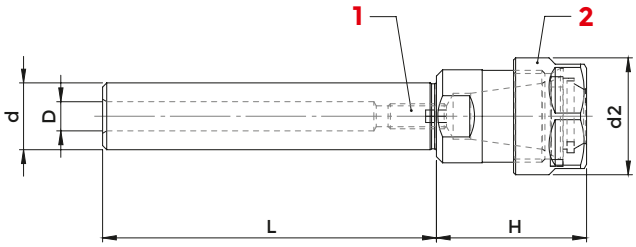

DIN 1835A

COD. (WITHOUT FLAT)	COD. (WITH FLAT)	DESCRIPTION	d	ER	H	d2	D	2 NUT	1 SCREW	WRENCH	COLLET
5276SP	264-35716	d 25 - ER 20 GE / L 130	25	ER 20 1÷15	28	34	13	812-203010	811-106005	816-203013	ER20
5277SP	264-35717	d 25 - ER 20 GE / L 160	25	ER 20 1÷15	28	34	13	812-203010	811-106005	816-203013	ER20
-	264-35718	d 25,4 - ER 16 GE / L 60	25,4	ER 16 1÷12	27	28	11	812-203009	811-102038	816-203012	ER16
-	264-35719	d 25,4 - ER 16 GE / L 100	25,4	ER 16 1÷12	27	28	11	812-203009	811-102038	816-203012	ER16
-	264-35720	d 25,4 - ER 20 GE / L 60	25,4	ER 20 1÷15	28	34	13	812-203010	811-106005	816-203013	ER20
-	264-35721	d 25,4 - ER 20 GE / L 100	25,4	ER 20 1÷15	28	34	13	812-203010	811-106005	816-203013	ER20
-	264-35722	d 32 - ER 16 GE / L 100	32	ER 16 1÷12	27	28	11	812-203009	811-102038	816-203012	ER16
-	264-35723	d 32 - ER 16 GE / L 150	32	ER 16 1÷12	27	28	11	812-203009	811-102038	816-203012	ER16
-	264-35724	d 32 - ER 20 GE / L 100	32	ER 20 1÷15	28	34	13	812-203010	811-106005	816-203013	ER20
-	264-35725	d 32 - ER 20 GE / L 150	32	ER 20 1÷15	28	34	13	812-203010	811-106005	816-203013	ER20

ACCESSORIES

p. 649

p. 631

p. 653

STRAIGHT SHANK ER COLLET CHUCKS WITH STANDARD NUT

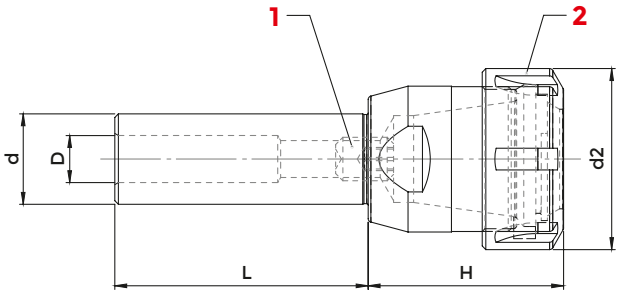

DIN 1835A

COD. (WITHOUT FLAT)	COD. (WITH FLAT)	DESCRIPTION	d	ER	H	d2	D	2 NUT	1 SCREW	WRENCH	COLLET
264-35152	-	d 14 - ER 16 / L 60	14	ER 16 1÷12	36	32	7	812-203005	811-102114	816-203000	ER16
3916SP	3916	d 16 - ER 16 / L 60	16	ER 16 1÷12	36	32	7	812-203005	811-102114	816-203000	ER16
214-35758	5009	d 16 - ER 16 / L 80	16	ER 16 1÷12	36	32	7	812-203005	811-102114	816-203000	ER16
214-35126	3185	d 16 - ER 16 / L 100	16	ER 16 1÷12	36	32	7	812-203005	811-102114	816-203000	ER16
214-35759	5087	d 16 - ER 16 / L 130	16	ER 16 1÷12	36	32	7	812-203005	811-102114	816-203000	ER16
3206SP	3206	d 16 - ER 16 / L 160	16	ER 16 1÷12	36	32	7	812-203005	811-102114	816-203000	ER16
264-35153	3529	d 16 - ER 20 / L 60	16	ER 20 1÷15	40	35	9	812-203006	811-102030	816-203005	ER20
264-35154	0573	d 16 - ER 25 / L 35	16	ER 25 1÷20	46	42	9	812-203001	811-102030	816-203001	ER25
264-35155	0574	d 16 - ER 25 / L 70	16	ER 25 1÷20	46	42	9	812-203001	811-102030	816-203001	ER25
-	214-35762	d 19,05 - ER16 / L 50	19,05	ER 16 1÷12	32	32	11	812-203005	811-102038	816-203000	ER16
-	214-35763	d 19,05 - ER16 / L 100	19,05	ER 16 1÷12	32	32	11	812-203005	811-102038	816-203000	ER16
-	214-35764	d 19,05 - ER20 / L 50	19,05	ER 20 1÷15	36	35	11	812-203006	811-102038	816-203005	ER20
-	214-35766	d 19,05 - ER25 / L 50	19,05	ER 25 1÷20	46	42	11	812-203001	811-102038	816-203001	ER25
-	214-35768	d 19,05 - ER32 / L 50	19,05	ER 32 2÷25	54	50	13	812-203002	811-106005	816-203002	ER32
3917SP	264-35156	d 20 - ER 16 / L 50	20	ER 16 1÷12	31	32	11	812-203005	811-102038	816-203000	ER16
214-35127SP	214-35127	d 20 - ER 16 / L 100	20	ER 16 1÷12	31	32	11	812-203005	811-102038	816-203000	ER16
5098SP	214-35770	d 20 - ER 16 / L 130	20	ER 16 1÷12	31	32	11	812-203005	811-102038	816-203000	ER16
3228SP	264-35157	d 20 - ER 16 / L 160	20	ER 16 1÷12	31	32	11	812-203005	811-102038	816-203000	ER16
5099SP	214-35771	d 20 - ER 16 / L 200	20	ER 16 1÷12	31	32	11	812-203005	811-102038	816-203000	ER16
3919SP	264-35158	d 20 - ER 20 / L 46	20	ER 20 1÷15	36	35	11	812-203006	811-102038	816-203005	ER20
3920SP	264-35159	d 20 - ER 20 / L 60	20	ER 20 1÷15	36	35	11	812-203006	811-102038	816-203005	ER20
264-35160SP	264-35160	d 20 - ER 20 / L 100	20	ER 20 1÷15	36	35	11	812-203006	811-102038	816-203005	ER20
5147SP	214-35772	d 20 - ER 20 / L 130	20	ER 20 1÷15	36	35	11	812-203006	811-102038	816-203005	ER20
5148SP	214-35773	d 20 - ER 20 / L 160	20	ER 20 1÷15	36	35	11	812-203006	811-102038	816-203005	ER20
5149SP	214-35774	d 20 - ER 20 / L 200	20	ER 20 1÷15	36	35	11	812-203006	811-102038	816-203005	ER20
214-35119SP	214-35119	d 20 - ER 25 / L 50	20	ER 25 1÷20	46	42	11	812-203001	811-102038	816-203001	ER25
214-35128SP	214-35128	d 20 - ER 25 / L 100	20	ER 25 1÷20	46	42	11	812-203001	811-102038	816-203001	ER25
3911SP	264-35162	d 20 - ER 25 / L 160	20	ER 25 1÷20	46	42	11	812-203001	811-102038	816-203001	ER25
3203SP	264-35163	d 20 - ER 32 / L 50	20	ER 32 2÷25	54	50	13	812-203002	811-106005	816-203002	ER32
214-35129SP	214-35129	d 20 - ER 32 / L 100	20	ER 32 2÷25	54	50	13	812-203002	811-106005	816-203002	ER32
3931SP	264-35164	d 20 - ER 32 / L 130	20	ER 32 2÷25	54	50	13	812-203002	811-106005	816-203002	ER32
3932SP	264-35165	d 20 - ER 32 / L 160	20	ER 32 2÷25	54	50	13	812-203002	811-106005	816-203002	ER32
-	264-35166	d 22 - ER 16 / L 80	22	ER 16 1÷12	26	32	11	812-203005	811-102038	816-203000	ER16
-	264-35167	d 22 - ER 20 / L 80	22	ER 20 1÷15	36	35	11	812-203006	811-102038	816-203005	ER20
-	264-35168	d 22 - ER 25 / L 50	22	ER 25 1÷20	42	42	13	812-203001	811-106005	816-203001	ER25
-	264-35170	d 22 - ER 32 / L 50	22	ER 32 2÷25	53	50	13	812-203002	811-106005	816-203002	ER32

follows >>

STRAIGHT SHANK ER COLLET CHUCKS WITH STANDARD NUT

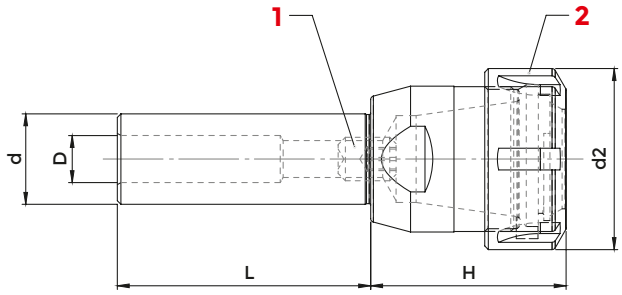

DIN 1835A

COD. (WITHOUT FLAT)	COD. (WITH FLAT)	DESCRIPTION	d	ER	H	d2	D	2 NUT	1 SCREW	WRENCH	COLLET
5163SP	214-35775	d 25 - ER 16 / L 60	25	ER 16 1÷12	27	32	11	812-203005	811-102038	816-203000	ER16
5164SP	214-35776	d 25 - ER 16 / L 100	25	ER 16 1÷12	27	32	11	812-203005	811-102038	816-203000	ER16
5165SP	214-35777	d 25 - ER 16 / L 130	25	ER 16 1÷12	27	32	11	812-203005	811-102038	816-203000	ER16
-	214-35778	d 25 - ER 16 / L 160	25	ER 16 1÷12	27	32	11	812-203005	811-102038	816-203000	ER16
0230SP	264-35171	d 25 - ER 20 / L 60	25	ER 20 1÷15	28	35	13	812-203006	811-106005	816-203005	ER20
0383SP	264-35172	d 25 - ER 20 / L 100	25	ER 20 1÷15	28	35	13	812-203006	811-106005	816-203005	ER20
5168SP	214-35780	d 25 - ER 20 / L 130	25	ER 20 1÷15	28	35	13	812-203006	811-106005	816-203005	ER20
5169SP	214-35781	d 25 - ER 20 / L 160	25	ER 20 1÷15	28	35	13	812-203006	811-106005	816-203005	ER20
3923SP	214-35120	d 25 - ER 25 / L 50	25	ER 25 1÷20	32	42	13	812-203001	811-106005	816-203001	ER25
5183SP	214-35782	d 25 - ER 25 / L 70	25	ER 25 1÷20	32	42	13	812-203001	811-106005	816-203001	ER25
0391SP	214-35130	d 25 - ER 25 / L 100	25	ER 25 1÷20	32	42	13	812-203001	811-106005	816-203001	ER25
0392SP	264-35173	d 25 - ER 25 / L 130	25	ER 25 1÷20	32	42	13	812-203001	811-106005	816-203001	ER25
0393SP	264-35174	d 25 - ER 25 / L 160	25	ER 25 1÷20	32	42	13	812-203001	811-106005	816-203001	ER25
1216SP	264-35175	d 25 - ER 32 / L 50	25	ER 32 2÷25	54	50	13	812-203002	811-106005	816-203002	ER32
1221SP	264-35176	d 25 - ER 32 / L 70	25	ER 32 2÷25	54	50	13	812-203002	811-106005	816-203002	ER32
214-35131SP	214-35131	d 25 - ER 32 / L 100	25	ER 32 2÷25	54	50	13	812-203002	811-106005	816-203002	ER32
3927SP	264-35177	d 25 - ER 32 / L 130	25	ER 32 2÷25	54	50	13	812-203002	811-106005	816-203002	ER32
3928SP	264-35178	d 25 - ER 32 / L 160	25	ER 32 2÷25	54	50	13	812-203002	811-106005	816-203002	ER32
2901SP	264-35179	d 25 - ER 40 / L 50	25	ER 40 3÷32	60	63	16	812-203003	811-106005	816-203003	ER40
3266SP	264-35180	d 25 - ER 40 / L 100	25	ER 40 3÷32	60	63	16	812-203003	811-106005	816-203003	ER40
-	264-35726	d 25,4 - ER 16 / L 60	25,4	ER 16 1÷12	27	32	11	812-203005	811-102038	816-203000	ER16
-	264-35727	d 25,4 - ER 16 / L 100	25,4	ER 16 1÷12	27	32	11	812-203005	811-102038	816-203000	ER16
-	264-35728	d 25,4 - ER 20 / L 60	25,4	ER 20 1÷15	28	35	13	812-203006	811-106005	816-203005	ER20
-	264-35729	d 25,4 - ER 20 / L 100	25,4	ER 20 1÷15	28	35	13	812-203006	811-106005	816-203005	ER20
-	264-35730	d 25,4 - ER 25 / L 50	25,4	ER 25 1÷20	32	42	13	812-203001	811-106005	816-203001	ER25
-	264-35731	d 25,4 - ER 25 / L 70	25,4	ER 25 1÷20	32	42	13	812-203001	811-106005	816-203001	ER25
-	264-35732	d 25,4 - ER 25 / L 100	25,4	ER 25 1÷20	32	42	13	812-203001	811-106005	816-203001	ER25
-	264-35733	d 25,4 - ER 32 / L 50	25,4	ER 32 2÷25	54	50	16	812-203002	811-106005	816-203002	ER32
-	264-35734	d 25,4 - ER 32 / L 70	25,4	ER 32 2÷25	54	50	16	812-203002	811-106005	816-203002	ER32
-	264-35735	d 25,4 - ER 32 / L 100	25,4	ER 32 2÷25	54	50	16	812-203002	811-106005	816-203002	ER32
-	264-35736	d 25,4 - ER 40 / L 50	25,4	ER 40 3÷32	54	50	16	812-203003	811-106005	816-203003	ER40
-	264-35181	d 30 - ER 25 / L 50	30	ER 25 1÷20	45	42	19	812-203001	0190	816-203001	ER25
-	264-35182	d 30 - ER 32 / L 50	30	ER 32 2÷25	53	50	23	812-203002	811-303118	816-203002	ER32
-	264-35737	d 31,75 - ER32 / L 50	31,75	ER 32 2÷25	44	50	23	812-203002	811-303118	816-203002	ER32
-	264-35738	d 31,75 - ER40 / L 50	31,75	ER 40 3÷32	60	63	23	812-203003	811-303118	816-203003	ER40
-	264-35739	d 32 - ER 16 / L 100	32	ER 16 1÷12	27	32	11	812-203005	811-102038	816-203000	ER16
-	264-35740	d 32 - ER 16 / L 150	32	ER 16 1÷12	27	32	11	812-203005	811-102038	816-203000	ER16

follows >>

STRAIGHT SHANK ER COLLET CHUCKS WITH STANDARD NUT

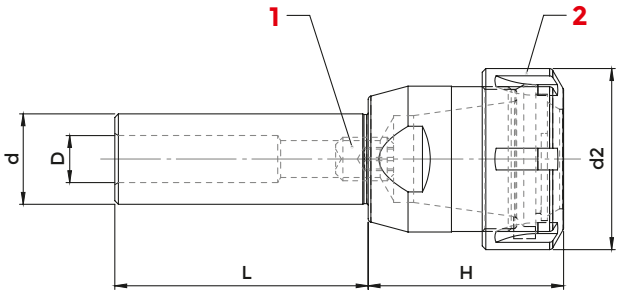

DIN 1835A

COD. (WITHOUT FLAT)	COD. (WITH FLAT)	DESCRIPTION	d	ER	H	d2	D	2 NUT	1 SCREW	WRENCH	COLLET
-	264-35741	d 32 - ER 20 / L 100	32	ER 20 1÷15	28	35	13	812-203006	811-106005	816-203005	ER20
-	264-35742	d 32 - ER 20 / L 150	32	ER 20 1÷15	28	35	13	812-203006	811-106005	816-203005	ER20
-	214-35132	d 32 - ER 25 / L 70	32	ER 25 1÷20	28	42	19	812-203001	0190	816-203001	ER25
-	264-35743	d 32 - ER 25 / L 100	32	ER 25 1÷20	28	42	19	812-203001	0190	816-203001	ER25
-	264-35184	d 32 - ER 25 / L 120	32	ER 25 1÷20	28	42	19	812-203001	0190	816-203001	ER25
-	264-35185	d 32 - ER 32 / L 50	32	ER 32 2÷25	38	50	23	812-203002	811-303118	816-203002	ER32
-	214-35117	d 32 - ER 32 / L 70	32	ER 32 2÷25	38	50	23	812-203002	811-303118	816-203002	ER32
-	264-35186	d 32 - ER 32 / L 100	32	ER 32 2÷25	38	50	23	812-203002	811-303118	816-203002	ER32
-	214-35133	d 32 - ER 32 / L 120	32	ER 32 2÷25	38	50	23	812-203002	811-303118	816-203002	ER32
-	214-35134	d 32 - ER 32 / L 150	32	ER 32 2÷25	38	50	23	812-203002	811-303118	816-203002	ER32
-	264-35188	d 32 - ER 40 / L 70	32	ER 40 3÷32	60	63	23	812-203003	811-303118	816-203003	ER40
-	264-35745	d 32 - ER 40 / L 100	32	ER 40 3÷32	60	63	23	812-203003	811-303118	816-203003	ER40
-	264-35746	d 32 - ER 40 / L 130	32	ER 40 3÷32	60	63	23	812-203003	811-303118	816-203003	ER40
-	264-35747	d 35 - ER 32 / L 80	35	ER 32 2÷25	38	50	23	812-203002	811-303118	816-203002	ER32
-	264-35189	d 40 - ER 25 / L 70	40	ER 25 1÷20	42	42	19	812-203001	0190	816-203001	ER25
-	214-35135	d 40 - ER 25 / L 120	40	ER 25 1÷20	42	42	19	812-203001	0190	816-203001	ER25
-	214-35136	d 40 - ER 32 / L 70	40	ER 32 2÷25	30	50	23	812-203002	811-303118	816-203002	ER32
-	264-35748	d 40 - ER 32 / L 100	40	ER 32 2÷25	30	50	23	812-203002	811-303118	816-203002	ER32
-	214-35137	d 40 - ER 32 / L 130	40	ER 32 2÷25	30	50	23	812-203002	811-303118	816-203002	ER32
-	264-35749	d 40 - ER 32 / L 160	40	ER 32 2÷25	30	50	23	812-203002	811-303118	816-203002	ER32
-	264-35190	d 40 - ER 40 / L 50	40	ER 40 3÷32	60	63	28	812-203003	0195	816-203003	ER40
-	214-35138	d 40 - ER 40 / L 80	40	ER 40 3÷32	60	63	28	812-203003	0195	816-203003	ER40
-	264-35191	d 40 - ER 40 / L 130	40	ER 40 3÷32	60	63	28	812-203003	0195	816-203003	ER40
-	264-35750	d 44,45 - ER32 / L 160	44,45	ER 32 2÷25	33	50	23	812-203002	811-303118	816-203002	ER32
-	264-35751	d 44,45 - ER40 / L 160	44,45	ER 40 3÷32	40	63	28	812-203003	0195	816-203003	ER40
-	264-35192	d 50 - ER 32 / L 125	50	ER 32 2÷25	32	50	23	812-203002	811-303118	816-203002	ER32
-	264-35193	d 50 - ER 32 / L 160	50	ER 32 2÷25	32	50	23	812-203002	811-303118	816-203002	ER32
-	264-35752	d 50 - ER 40 / L 125	50	ER 40 3÷32	37	63	28	812-203003	0195	816-203003	ER40
-	264-35194	d 50 - ER 40 / L 160	50	ER 40 3÷32	37	63	28	812-203003	0195	816-203003	ER40
-	264-35753	d 50,8 - ER 32 / L 160	50,8	ER 32 2÷25	32	50	23	812-203002	811-303118	816-203002	ER32
-	264-35754	d 50,8 - ER 40 / L 160	50,8	ER 40 3÷32	37	63	28	812-203003	0195	816-203003	ER40
-	264-35755	d 60 - ER 32 / L 160	60	ER 32 2÷25	32	50	23	812-203002	811-303118	816-203002	ER32
-	264-35756	d 60 - ER 40 / L 160	60	ER 40 3÷32	37	63	28	812-203003	0195	816-203003	ER40

ACCESSORIES

p. 649

p. 631

p. 653

WELDON SHANK ER COLLET CHUCKS WITH STANDARD NUT

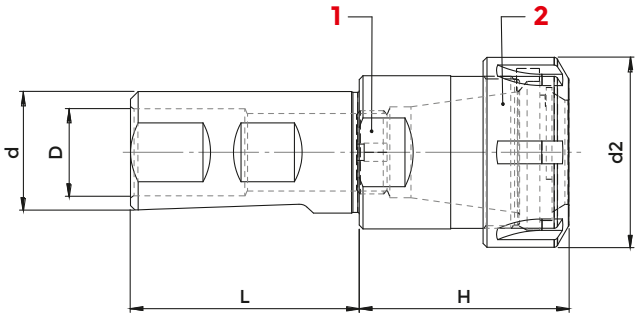

DIN 1835 B+E

COD.	DESCRIPTION	d	H	L	d2	D	ER	2 NUT	1 SCREW	WRENCH	COLLET
214-35214	WE 20 - ER 32 / H 55	20	55	50	50	11	ER 32 2÷25	812-203002	811-102038	816-203002	ER32
214-35215	WE 20 - ER 32 / H 100	20	100	50	50	11	ER 32 2÷25	812-203002	811-102038	816-203002	ER32
214-35216	WE 25 - ER 32 / H 55	25	55	56	50	13	ER 32 2÷25	812-203002	811-106005	816-203002	ER32
214-35217	WE 25 - ER 32 / H 100	25	100	56	50	13	ER 32 2÷25	812-203002	811-106005	816-203002	ER32
214-35218	WE 32 - ER 32 / H 55	32	55	60	50	23	ER 32 2÷25	812-203002	811-303118	816-203002	ER32
214-35219	WE 32 - ER 32 / H 100	32	100	60	50	23	ER 32 2÷25	812-203002	811-303118	816-203002	ER32

ACCESSORIES

p. 649 p. 631 p. 653

STRAIGHT SHANK ER COLLET CHUCKS WITH COOLING HOLES - STANDARD NUT

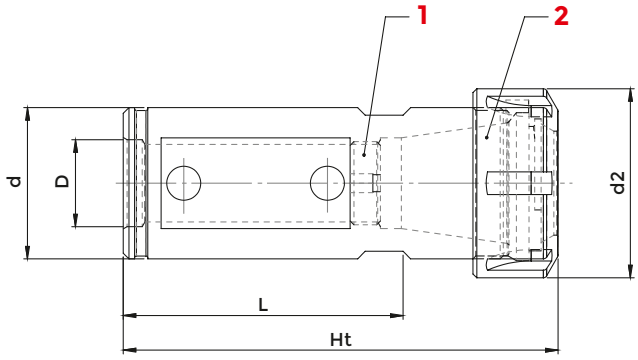

DIN 1835 A

COD.	DESCRIPTION	d	d2	Ht	L	D	ER	2 NUT	1 SCREW	WRENCH	COLLET
214-35170	d 32 NC - ER 25	32	42	110	70	19	ER 25 1÷20	812-203001	0190	816-203001	ER25
214-35171	d 32 NC - ER 32	32	50	118	70	23	ER 32 2÷25	812-203002	811-303118	816-203002	ER32
214-35172	d 40 NC - ER 32	40	50	115	75	23	ER 32 2÷25	812-203002	811-303118	816-203002	ER32
214-35173	d 40 NC - ER 40	40	63	130	75	23	ER 40 3÷32	812-203003	811-303118	816-203003	ER40

ACCESSORIES

p. 649 p. 631 p. 653

STRAIGHT SHANK ER COLLET CHUCKS WITH INNER NUT

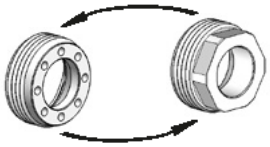

Nut "**GA**" type can be replaced by nut "**GA-E**" type (p. 652) with hexagonal wrench hold.

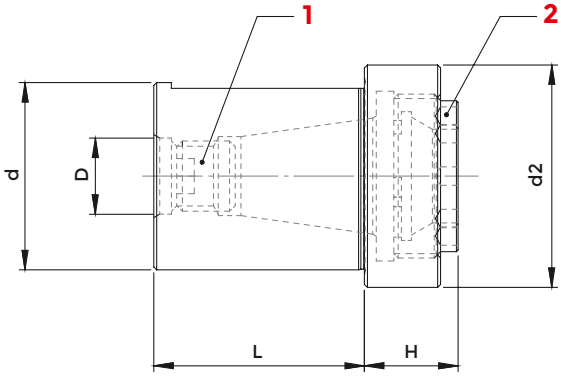

DIN 1835 A

COD.	DESCRIPTION	d	ER	H	L	d2	D	2 NUT	1 SCREW	WRENCH	COLLET
2939	d 20 - ER 16 GA	20	ER 16 1÷12	14	34	32	11	2868	811-106003	CHER16EX	ER16
3200	d 25 - ER 20 GA	25	ER 20 1÷15	18	34	38	13	2869	811-106013	3171	ER20
2940	d 32 - ER 20 GA	32	ER 20 1÷15	16	36	38	13	2869	811-106013	3171	ER20
2942	d 32 - ER 25 GA	32	ER 25 1÷20	19	36	40	19	812-203057	0190	CHER25EX	ER25
2943	d 40 - ER 32 GA	40	ER 32 2÷25	21	45	48	23	812-203032	811-303118	CHER32EX	ER32

ACCESSORIES

p. 651

p. 631

p. 651

SHANKS FOR KEYLESS DRILL CHUCKS

DIN 238 shank keyless drill chucks you can find at p. 615

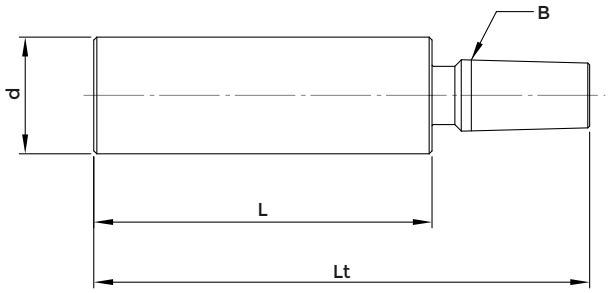

DIN 238

COD.	DESCRIPTION	d	B	L	Lt
402308B10	d 8 - B 10	8	10	35	55
402310B10	d 10 - B 10	10	10	50	70
402310B12	d 10 - B 12	10	12	50	75
402310B16	d 10 - B 16	10	16	50	82
402312B16	d 12 - B 16	12	16	50	82
402312B16L	d 12 - B 16	12	16	60	92
402316B16	d 16 - B 16	16	16	50	81
402316B16L	d 16 - B 16	16	16	70	101
402320B12	d 20 - B 12	20	12	60	85
402320B16	d 20 - B 16	20	16	60	92
402320B18	d 20 - B 18	20	18	60	100
402325B16	d 25 - B 16	25	16	75	107

STRAIGHT SHANK DRILL CHUCKS - RIGHT SPIN

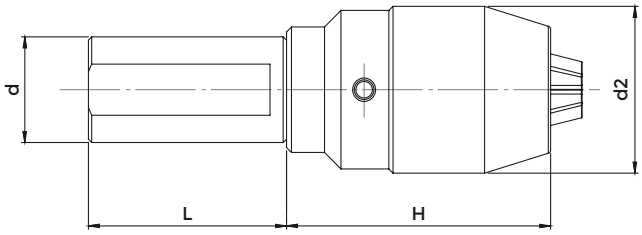

DIN 1835 A

COD.	DESCRIPTION	d	ER	H	L	d2	CLAMPS	SCREW	WRENCH
*252-15701	d 20 - DC 13	20	0,5 ÷ 13	50	80	60	9016	9021	2370
252-15702	d 25 - DC 13	25	0,5 ÷ 13	50	80	80	9016	9021	2370
252-15703	d 32 - DC 13	32	0,5 ÷ 13	50	80	60	9016	9021	2370
252-15704	d 32 - DC 16	32	3 ÷ 16	57	85	60	9017	9023	2371
252-15705	d 40 - DC 13	40	0,5 ÷ 13	50	80	70	9016	9021	2370
252-15706	d 40 - DC 16	40	3 ÷ 16	57	85	70	9017	9023	2371

*Supplied only with cylindrical connection WITHOUT FLAT
Supplied complete with suitable wrench

STRAIGHT SHANK DRILL CHUCKS - LEFT & RIGHT SPIN

Straight shank adapters to DIN238 you can find at p. 591

DIN 238 shank keyless drill chucks you can find at p. 615

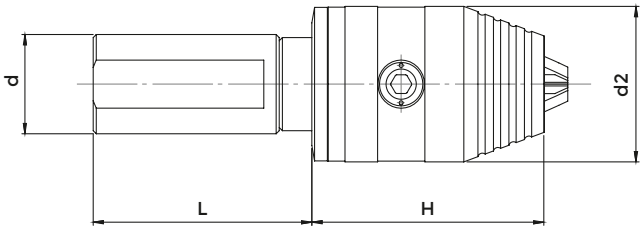

DIN 1835 A

COD.	DESCRIPTION	d	ER	H	L	d2	CLAMPS	SCREW	WRENCH
8607	d 25 - DCU13	25	0,5 ÷ 13	50	85	70	832-012020	9021	816-152001
8608	d 25 - DCU16	25	3 ÷ 16	50	89	70	832-012020	9021	816-152001
252-15709	d 32 - DCU13	32	0,5 ÷ 13	50	85	60	832-012020	9021	816-152001
252-15710	d 32 - DCU16	32	3 ÷ 16	57	89	60	832-012021	9023	816-152001
252-15711	d 40 - DCU13	40	0,5 ÷ 13	50	85	70	832-012020	9021	816-152001
252-15712	d 40 - DCU16	40	3 ÷ 16	57	89	70	832-012021	9023	816-152001

Supplied complete with suitable wrench

CYLINDRICAL SHANK WELDON REDUCTION SLEEVES

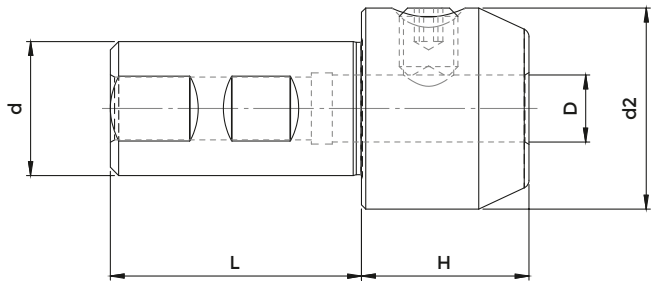

DIN 1835 B

COD.	DESCRIPTION	d	D	H	L	d2	SCREW
213-15203	WE 20 - d 6	20	6	30	50	25	811-106001
213-15204	WE 20 - d 8	20	8	30	50	28	811-106002
213-15205	WE 20 - d 10	20	10	30	50	35	811-106004
213-15206	WE 20 - d 12	20	12	35	50	42	811-106005
213-15207	WE 20 - d 14	20	14	35	50	44	811-106005
213-15208	WE 20 - d 16	20	16	60	50	48	811-106006
213-15209	WE 25 - d 6	25	6	25	56	25	811-106001
213-15210	WE 25 - d 8	25	8	30	56	28	811-106002
213-15211	WE 25 - d 10	25	10	30	56	35	811-106004
213-15212	WE 25 - d 12	25	12	35	56	42	811-106005
213-15213	WE 25 - d 14	25	14	35	56	44	811-106005
213-15214	WE 25 - d 16	25	16	40	56	48	811-106006
213-15215	WE 32 - d 6	32	6	30	60	25	811-106001
213-15216	WE 32 - d 8	32	8	30	60	28	811-106002
213-15217	WE 32 - d 10	32	10	30	60	35	811-106004
213-15218	WE 32 - d 12	32	12	35	60	42	811-106005
213-15219	WE 32 - d 14	32	14	35	60	44	811-106005
213-15220	WE 32 - d 16	32	16	40	60	48	811-106006
213-15221	WE 32 - d 18	32	18	40	60	50	811-106006
213-15222	WE 32 - d 20	32	20	40	60	52	811-106007
213-15223	WE 32 - d 25	32	25	65	60	65	811-106008

STRAIGHT SHANK TAPPING CILINDRIC CHUCKS - TENSION/COMPRESSION

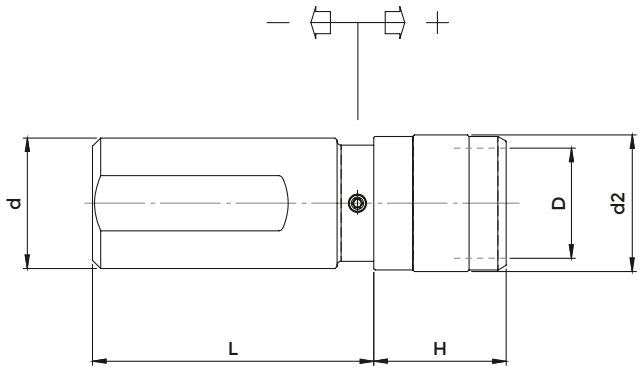

DIN 1835 A

COD.	DESCRIPTION	d	H	L	d2	D	RANGE	TAP SIZE RANGE
3807	d 16 - B. 0	16	37	56	26	13	- 6,5 + 6,5	M 1 ÷ M 10
3808	d 16 - B. 1	16	39	56	36	19	-7,5 + 7,5	M 3 ÷ M 12 (M 18)
3809	d 20 - B. 0	20	37	56	26	13	- 6,5 + 6,5	M 1 ÷ M 10
3851	d 20 - B. 1	20	40	50	38	19	-7,5 + 7,5	M 3 ÷ M 12 (M 18)
3852	d 20 - B. 2	20	63	50	53	31	-12,5 + 12,5	M 6 ÷ M 20 (M 30)
4451	d 25 - B. 1	25	40	53	38	19	-7,5 + 7,5	M 3 ÷ M 12 (M 18)
4452	d 25 - B. 2	25	63	53	53	31	-12,5 + 12,5	M 6 ÷ M 20 (M 30)
4453	d 32 - B. 1	32	40	60	38	19	-7,5 + 7,5	M 3 ÷ M 12 (+ M 18)
4454	d 32 - B. 2	32	63	77	53	31	-12,5 + 12,5	M 6 ÷ M 20 (M 30)
4486	d 32 - B. 3	32	98	100	79	48	-20,0 + 20,0	M 14 ÷ M 33 (M 48)
4455	d 40 - B. 1	40	40	58	38	19	-7,5 + 7,5	M 3 ÷ M 12 (M 18)
4456	d 40 - B. 2	40	63	77	53	31	-12,5 + 12,5	M 6 ÷ M 20 (M 30)
4487	d 40 - B. 3	40	98	100	79	48	-20,0 + 20,0	M 14 ÷ M 33 (M 48)

*Adapters with SCREWS

BORING BAR SLEEVE

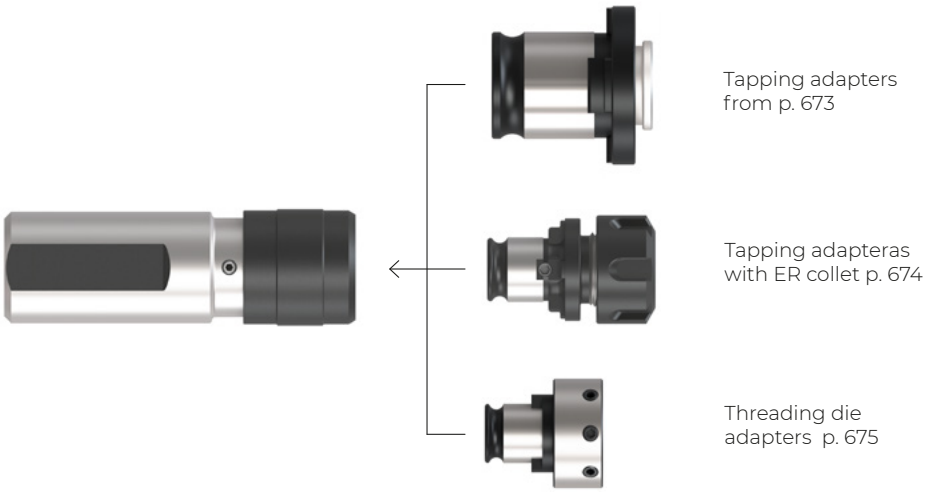

WELDON STRAIGHT SHANK TAPPING CHUCKS - TENSION/COMPRESSION

Tapping adapters
from p. 673

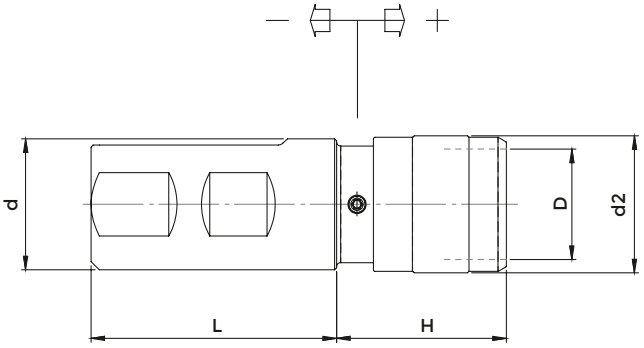

DIN 1835 B+E

COD.	DESCRIPTION	d	H	L	d2	D	RANGE	TAP SIZE RANGE
3127	WE 20 - B. 0	20	37	50	26	13	- 6,5 + 6,5	M 1 ÷ M 10
M401020	WE 20 - B. 1	20	40	50	38	19	-7,5 + 7,5	M 3 ÷ M 12 (* M 18)
3179	WE 20 - B. 2	20	63	50	53	31	-12,5 + 12,5	M 6 ÷ M 20 (* M 30)
M401025	WE 25 - B. 1	25	40	53	38	19	-7,5 + 7,5	M 3 ÷ M 12 (* M 18)
M402025	WE 25 - B. 2	25	63	53	53	31	-12,5 + 12,5	M 6 ÷ M 20 (* M 30)
M401032	WE 32 - B. 1	32	40	60	38	19	-7,5 + 7,5	M 3 ÷ M 12 (* M 18)
M402032	WE 32 - B. 2	32	63	60	53	31	-12,5 + 12,5	M 6 ÷ M 20 (* M 30)
M403032	WE 32 - B. 3	32	120	60	79	48	-20,0 + 20,0	M 14 ÷ M 33 (* M 48)
M401040	WE 40 - B. 1	40	40	72	38	19	-7,5 + 7,5	M 3 ÷ M 12 (* M 18)
M402040	WE 40 - B. 2	40	63	72	55	31	-12,5 + 12,5	M 6 ÷ M 20 (* M 30)
M403040	WE 40 - B. 3	40	98	72	79	48	-20,0 + 20,0	M 14 ÷ M 33 (* M 48)

*Adapters with SCREWS

WELDON STRAIGHT SHANK TAPPING CHUCKS - WITHOUT TENSION/COMPRESSION

Tapping adapters
from p. 673

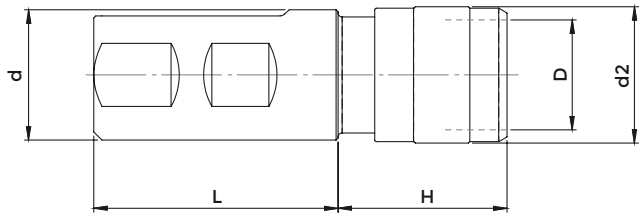

DIN 1835 B+E

COD.	DESCRIPTION	d	H	L	d2	D	TAP SIZE RANGE
2059	WE 20 - B. 1 FISSO	20	40	50	33	19	M 3 ÷ M 12 (* M 18)
2060	WE 20 - B. 2 FISSO	20	60	50	50	31	M 6 ÷ M 20 (* M 30)
2061	WE 25 - B. 1 FISSO	25	40	56	33	19	M 3 ÷ M 12 (* M 18)
2062	WE 25 - B. 2 FISSO	25	60	56	50	31	M 6 ÷ M 20 (* M 30)
2067	WE 32 - B. 1 FISSO	32	40	60	33	19	M 3 ÷ M 12 (* M 18)
2068	WE 32 - B. 2 FISSO	32	60	60	50	31	M 6 ÷ M 20 (* M 30)
2080	WE 40 - B. 1 FISSO	40	40	72	33	19	M 3 ÷ M 12 (* M 18)
2081	WE 40 - B. 2 FISSO	40	60	72	50	31	M 6 ÷ M 20 (* M 30)

*Adapters with SCREWS

DIN 1835 B SHANKS FOR MILLING CUTTERS WITH THREADED SHANK

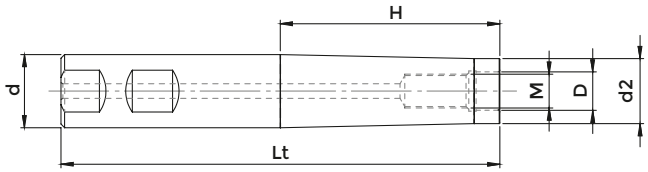

DIN 1835 B

COD.	DESCRIPTION	d	M	D	d2	H	Lt
217-85201	WE 16 - M 8	16	M8	8,5	12,8	60	115
217-85202	WE 16 - M 8	16	M8	8,5	12,8	100	160
217-85203	WE 20 - M 10	20	M10	10,5	17,8	60	120
217-85204	WE 20 - M 10	20	M10	10,5	17,8	100	160
217-85205	WE 25 - M 12	25	M12	12,5	20,8	100	160
217-85206	WE 32 - M 16	32	M16	17	28,8	100	160

EXTENSIONS FOR MILLING CUTTERS WITH THREADED SHANK

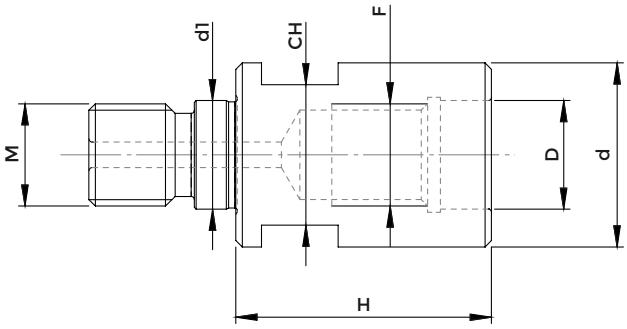

COD.	DESCRIPTION	M	F	D	d	d1	H	CH
217-85709	M 8 - M 8	M8	M8	8,5	12,8	8,5	30	11
217-85710	M 10 - M 10	M10	M10	10,5	17,8	10,5	35	15
217-85711	M 12 - M 12	M12	M12	12,5	20,8	12,5	40	17
217-85712	M 16 - M 16	M16	M16	17	28,8	17	40	22

REDUCTIONS FOR MILLING CUTTERS WITH THREADED SHANK

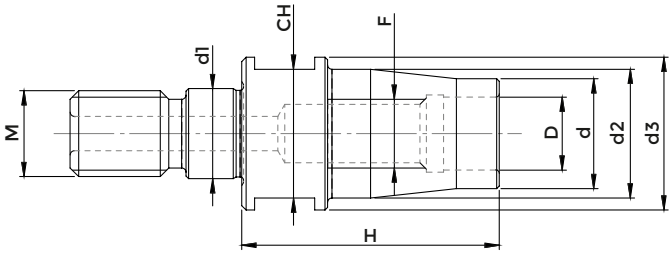

COD.	DESCRIPTION	M	F	D	d	d1	d2	d3	H	CH
217-85713	M 10 - M 8	M10	M8	8,5	12,8	10,5	17,8	18	30	15
217-85714	M 12 - M 8	M12	M8	8,5	12,8	12,5	20,8	21	40	17
217-85715	M 12 - M 10	M12	M10	10,5	17,8	12,5	20,8	21	35	17
217-85716	M 16 - M 10	M16	M10	10,5	17,8	17	28,8	29	60	22
217-85717	M 16 - M 12	M16	M12	12,5	20,8	17	28,8	29	40	22

ER COLLET CHUCKS WITH THREADED SHANK

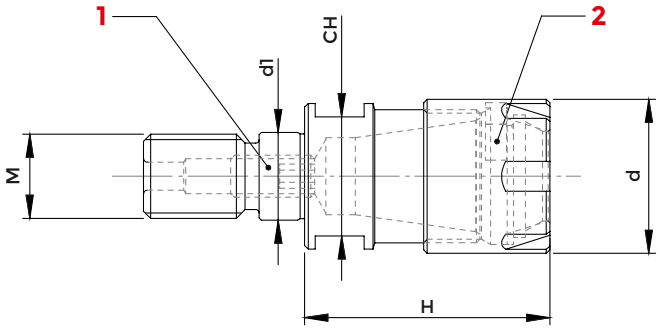

								2	1		
COD.	DESCRIPTION	M	ER	d	d1	H	CH	NUT	SCREW	WRENCH	COLLET
6460	M 12 - ER 16 GM	M12	ER 16 1÷12	22	12,5	35	17	1229	811-102020	816-203009	ER16
6461	M 16 - ER 16 GM	M16	ER 16 1÷12	22	17	40	22	1229	811-102020	816-203009	ER16
6462	M 16 - ER 20 GM	M16	ER 20 1÷15	28	17	40	22	1230	811-102020	816-203010	ER20
6463	M 16 - ER 25 GM	M16	ER 25 1÷20	35	17	45	22	1231	811-102020	816-203011	ER25

TRAPEZOIDAL SHANK ER COLLET CHUCKS WITH MINI NUT

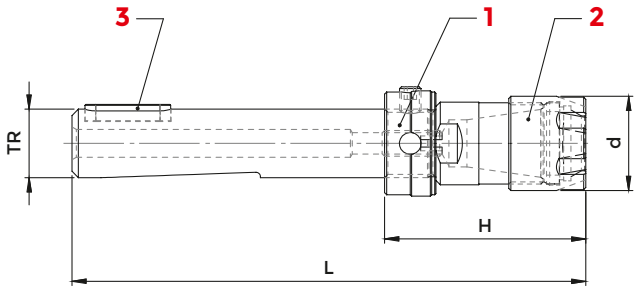

DIN 6327

COD.	DESCRIPTION	TR	ER	L	H	d	1 ADJUSTMENT NUT	3 KEY	2 NUT	WRENCH	COLLET
* 3146	TR 8 - ER 8 GM	8x1	ER 8 1÷ 5	75	35	12	2964	0101	0373	5717	0554
3147	TR10 - ER 11 GM	10x1,5	ER 11 1÷ 8	95	45	16	2965	0103	0432	5718	5573
3148	TR12 - ER 11 GM	12x1,5	ER 11 1÷ 8	95	45	16	2966	0103	0432	5718	5573
3149	TR12 - ER 16 GM	12x1,5	ER 16 1÷12	103	53	22	2966	0103	1229	5719	0364
3150	TR16 - ER 16 GM	16x1,5	ER 16 1÷12	120	47	22	2967	0107	1229	5719	0364
3151	TR16 - ER 20 GM	16x2	ER 20 1÷15	130	57	28	2967	0107	1230	5720	0787
3153	TR20 - ER 16 GM	20x2	ER 16 1÷12	135	59	22	2968	0107	1229	5719	0364
3154	TR20 - ER 20 GM	20x2	ER 20 1÷15	135	59	28	2968	0107	1230	5720	0787
3155	TR20 - ER 25 GM	20x2	ER 25 1÷20	135	59	35	2968	0107	1231	5721	0996

Supplied complete with adjustment nut
*Woodruff Key

ACCESSORIES

p. 648

p. 631

p. 652

TRAPEZOIDAL SHANK ER COLLET CHUCKS WITH EXAGONAL NUT

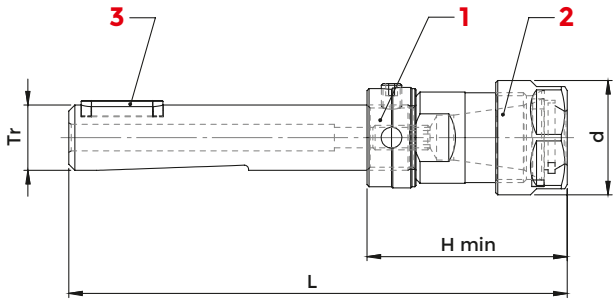

DIN 6327

COD.	DESCRIPTION	TR	ER	L	H MIN	d	1 ADJUSTMENT NUT	3 KEY	2 NUT	WRENCH	COLLET
3137	TR 16 - ER11 GE	16x1,5	ER 11 1÷ 8	110	37	19	2967	0107	1157	2905	5573
3138	TR 16 - ER16 GE	16x1,5	ER 16 1÷12	122	49	28	2967	0107	1214	2906	0364
3139	TR 20 - ER16 GE	20x2	ER 16 1÷12	128	52	28	2968	0107	1214	2906	0364
3140	TR 20 - ER20 GE	20x2	ER 20 1÷15	135	59	34	2968	0107	1215	2907	0787
3141	TR 28 - ER20 GE	28x2	ER 20 1÷15	140	57	34	2969	0108	1215	2907	0787

Supplied complete with adjustment nut

ACCESSORIES

p. 649

p. 631

p. 653

TRAPEZOIDAL SHANK ER COLLET CHUCKS WITH STANDARD NUT

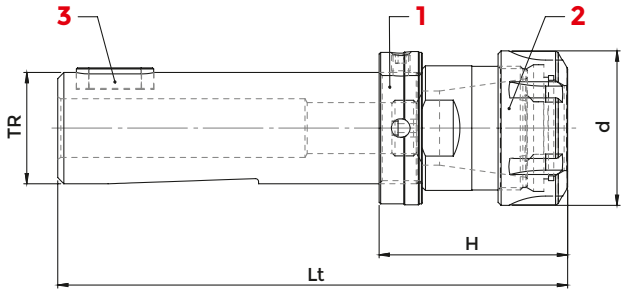

DIN 6327

COD.	DESCRIPTION	TR	ER	L	H	d	1 ADJUSTMENT NUT	3 KEY	2 NUT	WRENCH	COLLET
3142	TR 28 - ER 25	28x2	ER 25 1÷20	140	57	42	2969	108	4995	3669	0996
3143	TR 28 - ER 32	28x2	ER 32 2÷25	147	64	50	2969	108	4996	3670	0988
3162	TR 28 - ER 40	28x2	ER 40 3÷32	190	107	63	2969	108	4997	3671	0821
3973	TR 36 - ER 25	36x2	ER 25 1÷20	163	57	42	2970	111	4995	3669	0996
3144	TR 36 - ER 32	36x2	ER 32 2÷25	165	61	50	2970	111	4996	3670	0988
3145	TR 36 - ER 40	36x2	ER 40 3÷32	186	82	63	2970	111	4997	3671	0821
3667	TR 48 - ER 32	48x2	ER 32 2÷25	200	74	50	2971	114	4996	3670	0988

Supplied complete with adjustment nut

ACCESSORIES

p. 649

p. 631

p. 653

DIN 6327 ADJUSTMENT NUTS

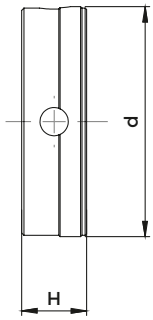

DIN 6327

COD.	DESCRIPTION	TR	H	d	SCREW
2964	GH - TR 8 x 1	8x1	10	14,8	0011
2965	GH - TR10 x1,5	10x1,5	12	17,8	0017
2966	GH - TR12 x1,5	12x1,5	12	19,7	0017
2967	GH - TR16 x1,5	16x1,5	12	24,6	0019
2968	GH - TR20 x 2	20x2	12	31,6	0019
2969	GH - TR28 x 2	28x2	12	39,6	0020
2970	GH - TR36 x 2	36x2	14	49,6	0020
2971	GH - TR48 x 2	48x2	18	66,6	0021

SHANKS FOR DRILL CHUCKS DIN 238 / ISO 239 TYPE

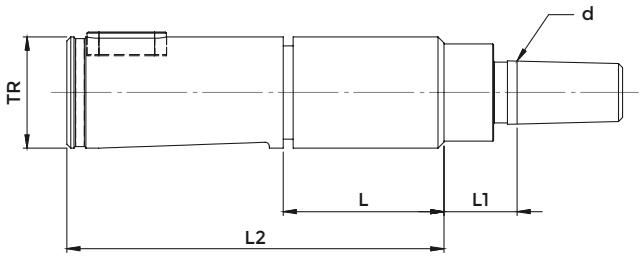

DIN 6327

COD.	DESCRIPTION	TR	L	L1	L2	d	ADJUSTMENT NUT
2774	TR 28 - B 16	28x2	42	21	95	15,733	2969
2775	TR 36 - B 16	36x2	50	21	118	15,733	2970

ACCESSORIES
p. 615

DIN 6327 ADJUSTABLE MORSE TAPER ADAPTERS - "E" TYPE

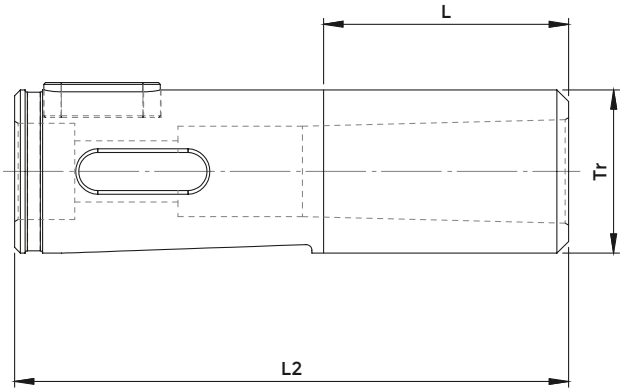

DIN 6327

COD.	DESCRIPTION	TR	L	L2	ADJUSTMENT NUT
2984	E 16 x 1	16	40	85	2967
2985	E 20 x 1	20	40	88	2968
2986	E 28 x 1	28	42	95	2969
3167	E 28 x 2	28	42	95	2969
3168	E 36 x 2	36	50	118	2970
3410	E 36 x 3	36	50	118	2970
3198	E 48 x 2	48	65	144	2971

ACCESSORIES

p. 601

TENSION/COMPRESSION QUICK CHANGE TAPPING HEADS

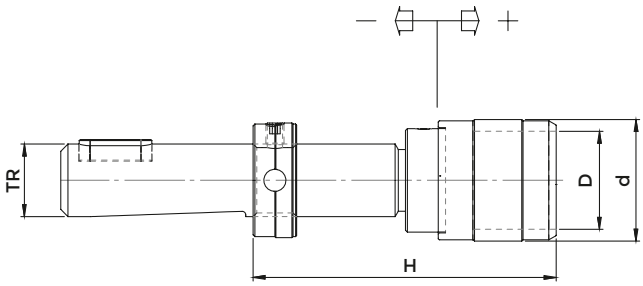

Tapping adapters
from p. 673

DIN 6327

COD.	DESCRIPTION	TR	H	d	D	RANGE	TAP SIZE RANGE
							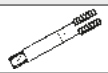
3811	TR 16 - B. 0	16x2	49	26	13	- 6,5 + 6,5	M 1 ÷ M 10
3564	TR 16 - B. 1	16x2	51	36	19	-7,5 + 7,5	M 3 ÷ M 12 (* M 18)
3156	TR 20 - B. 0	20x2	49	26	13	- 6,5 + 6,5	M 1 ÷ M 10
3565	TR 20 - B. 1	20x2	51	38	19	-7,5 + 7,5	M 3 ÷ M 12 (* M 18)
3926	TR 20 - B. 2	20x2	75	55	31	-12,5 + 12,5	M 6 ÷ M 20 (* M 30)
3566	TR 28 - B. 1	28x2	51	38	19	-7,5 + 7,5	M 3 ÷ M 12 (* M 18)
3567	TR 28 - B. 2	28x2	76	55	31	-12,5 + 12,5	M 6 ÷ M 20 (* M 30)
3220	TR 28 - B. 3	28x2	108	79	48	-20,0 + 20,0	M14 ÷ M 33 (* M 48)
3568	TR 36 - B. 1	36x2	53	38	19	-7,5 + 7,5	M 3 ÷ M 12 (* M 18)
3569	TR 36 - B. 2	36x2	78	55	31	-12,5 + 12,5	M 6 ÷ M 20 (* M 30)
3570	TR 36 - B. 3	36x2	110	79	48	-20,0 + 20,0	M14 ÷ M 33 (* M 48)
3571	TR 48 - B. 3	48x2	114	79	48	-20,0 + 20,0	M14 ÷ M 33 (* M 48)

*Adapters with SCREWS
Supplied complete with adjustment nut

SOLID TAPPING HEADS

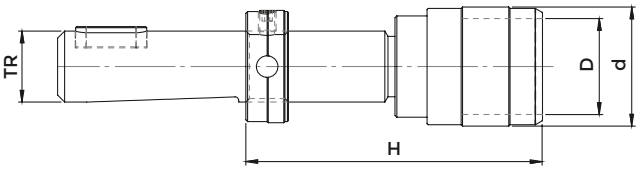

Tapping adapters
from p. 673

DIN 6327

COD.	DESCRIPTION	TR	H	d	D	TAP SIZE RANGE
5198	TR 16 - B. 0 FISSO	16x2	45	23	13	M 1 ÷ M 10
5199	TR 16 - B. 1 FISSO	16x2	49	32	19	M 3 ÷ M 12 (* M 18)
5211	TR 20 - B. 1 FISSO	20x2	49	32	19	M 3 ÷ M 12 (* M 18)
5212	TR 20 - B. 2 FISSO	20x2	66	50	31	M 6 ÷ M 20 (* M 30)
5213	TR 28 - B. 1 FISSO	28x2	49	32	19	M 3 ÷ M 12 (* M 18)
5214	TR 28 - B. 2 FISSO	28x2	66	50	31	M 6 ÷ M 20 (* M 30)
5215	TR 36 - B. 1 FISSO	36x2	49	32	19	M 3 ÷ M 12 (* M 18)
5216	TR 36 - B. 2 FISSO	36x2	68	50	31	M 6 ÷ M 20 (* M 30)

Supplied complete with adjustment nut

ER COLLET CHUCKS WITH MINI NUT

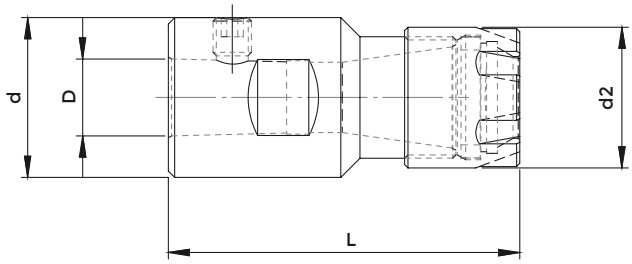

DIN 238

COD.	DESCRIPTION	d	ER	L	d2	d	NUT	WRENCH	COLLET
3193	"B12" - ER 11 GM	25	ER 11 1÷ 8	63	12,06	16	0432	5718	5573
3194	"B12" - ER 16 GM	25	ER 16 1÷12	55	12,06	22	1229	5719	0364
3221	"B12" - ER 20 GM	25	ER 20 1÷15	67	12,06	28	1230	5720	0787
3195	"B16" - ER 16 GM	25	ER 16 1÷12	85	15,73	22	1229	5719	0364
3196	"B16" - ER 20 GM	25	ER 20 1÷15	80	15,73	28	1230	5720	0787
3197	"B18" - ER 20 GM	28	ER 20 1÷15	74	17,78	28	1230	5720	0787

ACCESSORIES

p. 648

p. 631

p. 652

SOLID TAPPING HEADS

Tapping adapters
from p. 673

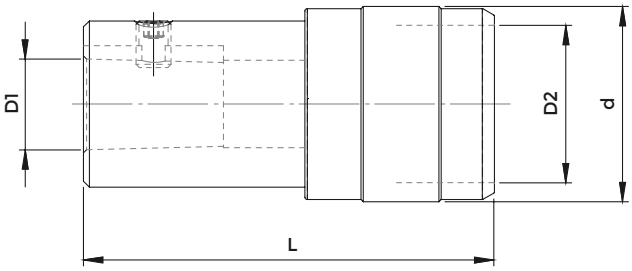

DIN 238

COD.	DESCRIPTION	L	D1	d	D2	TAP SIZE RANGE
0244	"B 12" - B. 0 FISSO	55	12,06	26	13	M 1 ÷ M 10
0320	"B 12" - B. 1 FISSO	59	12,06	33	19	M 3 ÷ M 12 (* M 18)
0340	"B 16" - B. 1 FISSO	65	15,73	33	19	M 3 ÷ M 12 (* M 18)
0071	"B 16" - B. 2 FISSO	84	15,73	50	31	M 6 ÷ M 20 (* M 30)
0384	"B 18" - B. 1 FISSO	73	17,78	33	19	M 3 ÷ M 12 (* M 18)
0072	"B 18" - B. 2 FISSO	92	17,78	50	31	M 6 ÷ M 20 (* M 30)

*Adapters with SCREWS

MORSE TAPER DIN 228-A
STANDARD FEATURES (WITH THREAD)

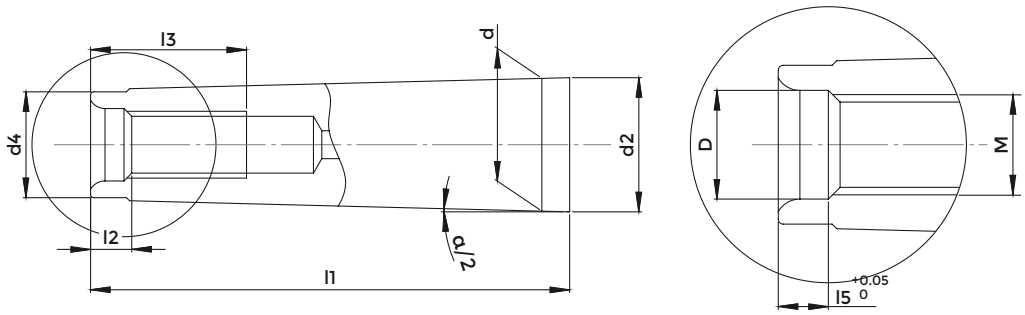

DIN 288-A

CONE	d	d2	d4	D	M	l1	l2	l3	l5	α/2
CM 0	9,045	9,2	6	-	-	50	4	-	-	1° 29' 27"
CM 1	12,065	12,2	9	6,4	M 6	53,5	5	16	4	1° 25' 43"
CM 2	17,78	18	14	10,5	M 10	64	5	24	5	1° 25' 50"
CM 3	23,825	24,1	19	13	M 12	81	7	24	5,5	1° 26' 16"
CM 4	31,267	31,6	25	17	M 16	102,5	9	32	8,2	1° 29' 15"
CM 5	44,399	44,7	35,7	21	M 20	129,5	10	40	10	1° 30' 26"
CM 6	63,348	63,8	51	25	M 24	182	16	47	11,5	1° 29' 36"

MORSE TAPER DIN 228-B
STANDARD FEATURES (WITH TENON)

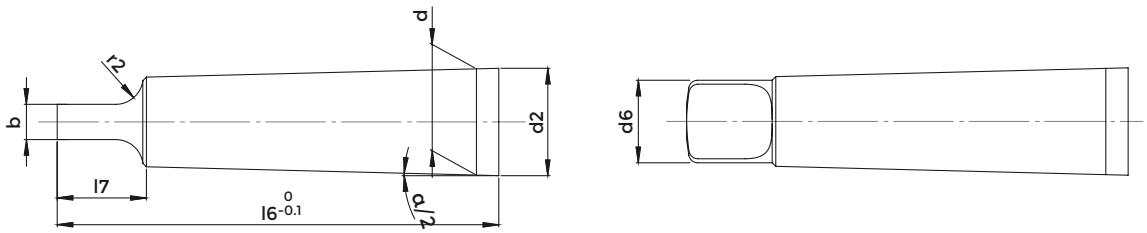

DIN 288-A

CONE	b	d	d2	d6	l6	l7	r2	α/2
CM 0	3,9	9,045	9,2	6	56,5	10,5	4	1° 29' 27"
CM 1	5,2	12,065	12,2	8,7	62	13,5	5	1° 25' 43"
CM 2	6,3	17,78	18	13,5	75	16	6	1° 25' 50"
CM 3	7,9	23,825	24,1	18,5	94	20	7	1° 26' 16"
CM 4	11,9	31,267	31,6	24,5	117,5	24	8	1° 29' 15"
CM 5	15,9	44,399	44,7	35,7	149,5	29	10	1° 30' 26"
CM 6	19	63,348	63,8	51	210	40	13	1° 29' 36"

MORSE TAPER SHANK ER COLLET CHUCKS WITH THREAD - MINI NUT

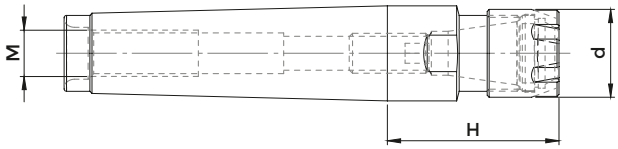

DIN 228-A

COD.	DESCRIPTION	CM	ER	H	d	M	NUT	WRENCH	COLLET
3509	CM 1 A - ER 11 GM	1	ER 11 1÷ 8	25	16	M 6	0432	5718	5573
3510	CM 1 A - ER 16 GM	1	ER 16 1÷ 12	40	22	M 6	1229	5719	0364
3511	CM 2 A - ER 16 GM	2	ER 16 1÷ 12	42	22	M 10	1229	5719	0364
3512	CM 2 A - ER 20 GM	2	ER 20 1÷ 15	50	28	M 10	1230	5720	0787
3513	CM 2 A - ER 25 GM	2	ER 25 1÷ 20	54	35	M 10	1231	5721	0996
3516	CM 3 A - ER 16 GM	3	ER 16 1÷ 12	43	22	M 12	1229	5719	0364
3517	CM 3 A - ER 20 GM	3	ER 20 1÷ 15	47	28	M 12	1230	5720	0787
3518	CM 3 A - ER 25 GM	3	ER 25 1÷ 20	58	35	M 12	1231	5721	0996

ACCESSORIES

p. 648

p. 631

p. 652

MORSE TAPER SHANK ER COLLET CHUCKS WITH TENON - MINI NUT

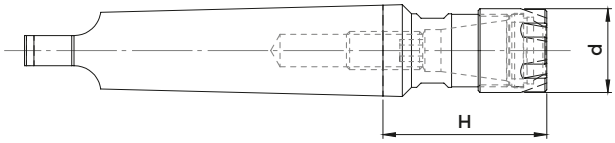

DIN 228-B

COD.	DESCRIPTION	CM	ER	H	d	NUT	WRENCH	COLLET
8613	CM 1 - ER 11 GM	1	ER 11 1÷ 8	25	16	0432	5718	5573
8614	CM 1 - ER 16 GM	1	ER 16 1÷12	40	22	1229	5719	0364
8615	CM 2 - ER 16 GM	2	ER 16 1÷12	42	22	1229	5719	0364
8616	CM 2 - ER 20 GM	2	ER 20 1÷15	50	28	1230	5720	0787
8617	CM 2 - ER 25 GM	2	ER 25 1÷20	54	35	1231	5721	0996
8618	CM 3 - ER 16 GM	3	ER 16 1÷12	43	22	1229	5719	0364
8619	CM 3 - ER 20 GM	3	ER 20 1÷15	47	28	1230	5720	0787
8620	CM 3 - ER 25 GM	3	ER 25 1÷20	58	35	1231	5721	0996

ACCESSORIES

p. 648

p. 631

p. 652

MORSE TAPER SHANK ER COLLET CHUCKS WITH THREAD - HEXAGONAL NUT

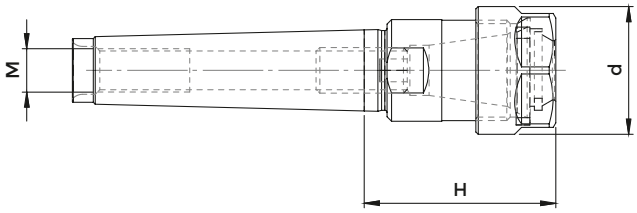

DIN 228-A

COD.	DESCRIPTION	CM	ER	H	d	M	NUT	WRENCH	COLLET
8621	CM 1 A - ER 16 GE	1	ER 16 1÷ 12	40	28	M 6	1214	2906	0364
8622	CM 2 A - ER 16 GE	2	ER 16 1÷ 12	42	28	M 10	1214	2906	0364
8623	CM 2 A - ER 20 GE	2	ER 20 1÷ 15	50	34	M 10	1215	2907	0787

ACCESSORIES

p. 649 p. 631 p. 653

MORSE TAPER SHANK ER COLLET CHUCKS WITH TENON - HEXAGONAL NUT

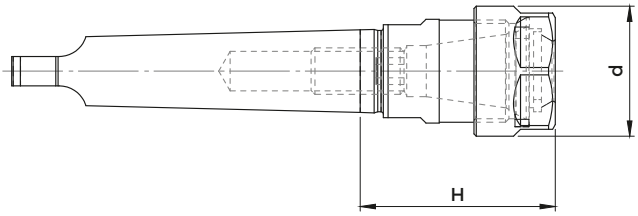

DIN 228-B

COD.	DESCRIPTION	CM	ER	H	d	NUT	WRENCH	COLLET
8624	CM 1 - ER 16 GE	1	ER 16 1÷12	40	28	1214	2906	0364
8625	CM 2 - ER 16 GE	2	ER 16 1÷12	42	28	1214	2906	0364
8626	CM 2 - ER 20 GE	2	ER 20 1÷15	50	34	1215	2907	0787

ACCESSORIES

p. 649 p. 631 p. 653

MORSE TAPER SHANK ER COLLET CHUCKS WITH THREAD - STANDARD NUT

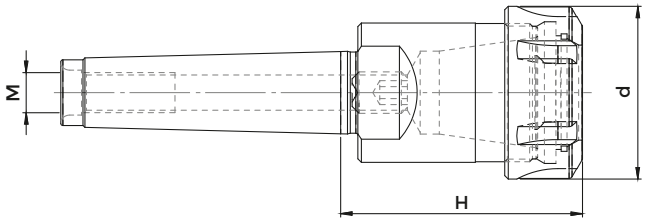

DIN 238-A

COD.	DESCRIPTION	CM	ER	H	d	M	NUT	WRENCH	COLLET
2915	CM 1 A - ER 16	1	ER 16 1÷12	40	32	M 6	4993	3698	0364
2916	CM 2 A - ER 16	2	ER 16 1÷12	42	32	M 10	4993	3698	0364
2917	CM 2 A - ER 20	2	ER 20 1÷15	50	35	M 10	4994	3699	0787
2918	CM 2 A - ER 25	2	ER 25 1÷20	54	42	M 10	4995	3669	0996
3310	CM 2 A - ER 32	2	ER 32 2÷25	59	50	M 10	4996	3670	0988
2919	CM 3 A - ER 25	3	ER 25 1÷20	53	42	M 12	4995	3669	0996
2920	CM 3 A - ER 32	3	ER 32 2÷25	70	50	M 12	4996	3670	0988
2921	CM 3 A - ER 40	3	ER 40 3÷32	80	63	M 12	4997	3671	0821
2922	CM 4 A - ER 32	4	ER 32 2÷25	60	50	M 16	4996	3670	0988
2923	CM 4 A - ER 40	4	ER 40 3÷32	81	63	M 16	4997	3671	0821
2924	CM 4 A - ER 50	4	ER 50 6÷36	96	78	M 16	4998	3668	4055
2902	CM 5 A - ER 32	5	ER 32 2÷25	50	50	M 20	4996	3670	0988
2925	CM 5 A - ER 40	5	ER 40 3÷32	81	63	M 20	4997	3671	0821
2926	CM 5 A - ER 50	5	ER 50 6÷36	91	78	M 20	4998	3668	4055

ACCESSORIES

p. 649

p. 631

p. 653

EQUIPMENT CASES WITH REDUCED SET OF ER COLLETS

COD.	DESCRIPTION	CM	CHUCK	CASE	WRENCH	COLLET
7524	KIT Rid CM 2 A - ER 25	2	2918	7022	3669	0996: Ø 4 - 6 - 8 -10 -12 -16
7525	KIT Rid CM 2 A - ER 32	2	3310	7023	3670	0988: Ø 4 - 6 - 8 -10 -12 -16 - 20
7526	KIT Rid CM 3 A - ER 25	3	2919	7022	3669	0996: Ø 4 - 6 - 8 -10 -12 -16
7527	KIT Rid CM 3 A - ER 32	3	2920	7023	3670	0988: Ø 4 - 6 - 8 -10 -12 -16 - 20
7528	KIT Rid CM 3 A - ER 40	3	2921	7024	3671	0821: Ø 4 - 6 - 8 -10 -12 -16 - 20 -25
7529	KIT Rid CM 4 A - ER 32	4	2922	7023	3670	0988: Ø 4 - 6 - 8 -10 -12 -16 - 20
7530	KIT Rid CM 4 A - ER 40	4	2923	7024	3671	0821: Ø 4 - 6 - 8 -10 -12 -16 - 20 -25

EQUIPMENT CASES WITH COMPLETE SET OF ER COLLETS

COD.	DESCRIPTION	CM	CHUCK	CASE	WRENCH	COLLET
7508	KIT CM 2 A - ER 25	2	2918	7022	3669	0996: Ø 2 ÷ 16 (15 Pinze)
7509	KIT CM 2 A - ER 32	2	3310	7023	3670	0988: Ø 3 ÷ 20 (18 Pinze)
7510	KIT CM 3 A - ER 25	3	2919	7022	3669	0996: Ø 2 ÷ 16 (15 Pinze)
7511	KIT CM 3 A - ER 32	3	2920	7023	3670	0988: Ø 3 ÷ 20 (18 Pinze)
7512	KIT CM 3 A - ER 40	3	2921	7024	3671	0821: Ø 4 ÷ 26 (23 Pinze)
7513	KIT CM 4 A - ER 32	4	2922	7023	3670	0988: Ø 3 ÷ 20 (18 Pinze)
7514	KIT CM 4 A - ER 40	4	2923	7024	3671	0821: Ø 4 ÷ 26 (23 Pinze)

MORSE TAPER SHANK ER COLLET CHUCKS WITH TENON - STANDARD NUT

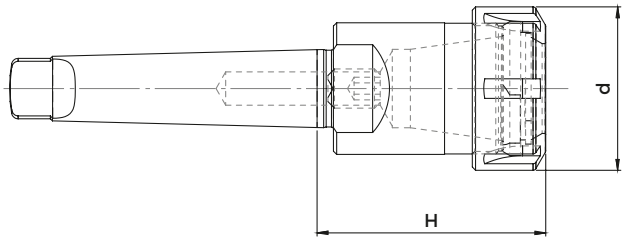

DIN 228-B

COD.	DESCRIPTION	CM	ER	H	d	NUT	SCREW	WRENCH	COLLET
8627	CM 1 - ER 16	1	ER 16 1÷12	40	32	4993	0181	3698	0364
8628	CM 2 - ER 16	2	ER 16 1÷12	42	32	4993	0186	3698	0364
8629	CM 2 - ER 20	2	ER 20 1÷15	50	35	4994	0186	3699	0787
8630	CM 2 - ER 25	2	ER 25 1÷20	54	42	4995	0186	3669	0996
8631	CM 2 - ER 32	2	ER 32 2÷25	59	50	4996	0186	3670	0988
8632	CM 3 - ER 25	3	ER 25 1÷20	53	42	4995	4973	3669	0996
8633	CM 3 - ER 32	3	ER 32 2÷25	70	50	4996	4973	3670	0988
8634	CM 3 - ER 40	3	ER 40 3÷32	80	63	4997	4973	3671	0821
8635	CM 4 - ER 32	4	ER 32 2÷25	60	50	4996	0190	3670	0988
8636	CM 4 - ER 40	4	ER 40 3÷32	81	63	4997	0190	3671	0821
8637	CM 4 - ER 50	4	ER 50 6÷36	96	78	4998	0190	3668	4055
8638	CM 5 - ER 32	5	ER 32 2÷25	50	50	4996	0191	3670	0988
8639	CM 5 - ER 40	5	ER 40 3÷32	81	63	4997	0195	3671	0821
8640	CM 5 - ER 50	5	ER 50 6÷36	91	78	4998	0195	3668	4055

ACCESSORIES

p. 649

p. 631

p. 653

EQUIPMENT CASES WITH REDUCED SET OF ER COLLETS

COD.	DESCRIPTION	CM	CHUCK	CASE	WRENCH	COLLET
7727	KIT Rid CM 2 - ER 25	2	8630	7022	3669	0996: Ø 4 - 6 - 8 -10 -12 -16
7728	KIT Rid CM 2 - ER 32	2	8631	7023	3670	0988: Ø 4 - 6 - 8 -10 -12 -16 - 20
7729	KIT Rid CM 3 - ER 25	3	8632	7022	3669	0996: Ø 4 - 6 - 8 -10 -12 -16
7730	KIT Rid CM 3 - ER 32	3	8633	7023	3670	0988: Ø 4 - 6 - 8 -10 -12 -16 - 20
7731	KIT Rid CM 3 - ER 40	3	8634	7024	3671	0821: Ø 4 - 6 - 8 -10 -12 -16 - 20 -25
7732	KIT Rid CM 4 - ER 32	4	8635	7023	3670	0988: Ø 4 - 6 - 8 -10 -12 -16 - 20
7733	KIT Rid CM 4 - ER 40	4	8636	7024	3671	0821: Ø 4 - 6 - 8 -10 -12 -16 - 20 -25

EQUIPMENT CASES WITH COMPLETE SET OF ER COLLETS

COD.	DESCRIPTION	CM	CHUCK	CASE	WRENCH	COLLET
7734	KIT CM 2 - ER 25	2	8630	7022	3669	0996: Ø 2 ÷ 16 (15 Pinze)
7735	KIT CM 2 - ER 32	2	8631	7023	3670	0988: Ø 3 ÷ 20 (18 Pinze)
7736	KIT CM 3 - ER 25	3	8632	7022	3669	0996: Ø 2 ÷ 16 (15 Pinze)
7737	KIT CM 3 - ER 32	3	8633	7023	3670	0988: Ø 3 ÷ 20 (18 Pinze)
7738	KIT CM 3 - ER 40	3	8634	7024	3671	0821: Ø 4 ÷ 26 (23 Pinze)
7739	KIT CM 4 - ER 32	4	8635	7023	3670	0988: Ø 3 ÷ 20 (18 Pinze)
7740	KIT CM 4 - ER 40	4	8636	7024	3671	0821: Ø 4 ÷ 26 (23 Pinze)

MORSE TAPER END MILL HOLDERS FOR DIN 1835-B SHANKS

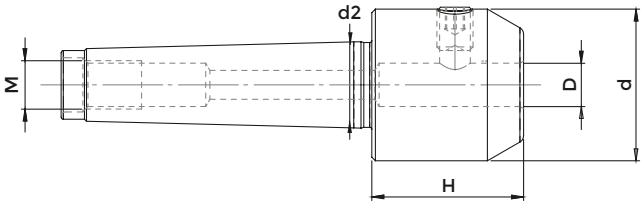

DIN 228-A

COD.	DESCRIPTION	D	H	d	d2	M
9535	CM 2 A - d 16	16	58	48	18,0	M 10
9545	CM 3 A - d 20	20	60	52	24,1	M 12
9546	CM 3 A - d 25	25	70	65	24,1	M 12
9552	CM 4 A - d 16	16	58	48	31,6	M 16
9554	CM 4 A - d 20	20	60	52	31,6	M 16
9555	CM 4 A - d 25	25	70	65	31,6	M 16
9556	CM 4 A - d 32	32	75	72	31,6	M 16
9557	CM 4 A - d 40	40	85	90	31,6	M 16

TENON FOR MORSE TAPER

DIN 228-A-B

COD.	DESCRIPTION	M
4079	T . CM 1 - M 6	M 6
4080	T . CM 2 - M 10	M 10
4081	T . CM 3 - M 12	M 12
4082	T . CM 4 - M 16	M 16
4083	T . CM 5 - M 20	M 20

MORSE TAPER SHANK DRILL CHUCKS - RIGHT SPIN

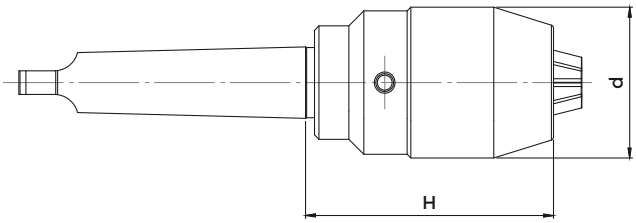

DIN 228-B

COD.	DESCRIPTION	CM	RANGE	d	H	WRENCH
8646	CM 2 - DC 13	2	0,5 ÷ 13	50	86	2370
8647	CM 3 - DC 13	3	0,5 ÷ 13	50	86	2370
8648	CM 3 - DC 16	3	3 ÷ 16	57	90	2371
8649	CM 4 - DC 13	4	0,5 ÷ 13	50	87	2370
8650	CM 4 - DC 16	4	3 ÷ 16	57	91	2371

Supplied complete with suitable wrench

MORSE TAPER SHANK DRILL CHUCKS - RIGHT & LEFT SPIN

DIN 238 shank keyless drill chucks you can find at p. 615

Morse taper shank adapters to DIN 238 you can find at p. 616

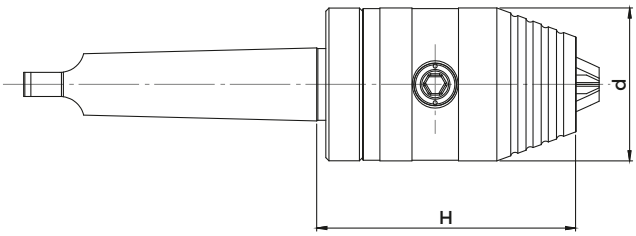

DIN 228-B

COD.	DESCRIPTION	CM	RANGE	d	H	WRENCH
8651	CM 2 - DCU 13	2	0,5 ÷ 13	50	87	2372
8652	CM 3 - DCU 13	3	0,5 ÷ 13	50	87	2372
8653	CM 3 - DCU 16	3	3 ÷ 16	50	92	2372
8654	CM 4 - DCU 13	4	0,5 ÷ 13	50	88	2372
8655	CM 4 - DCU 16	4	3 ÷ 16	50	94	2372

Supplied complete with suitable wrench

KEYLESS DRILL CHUCKS

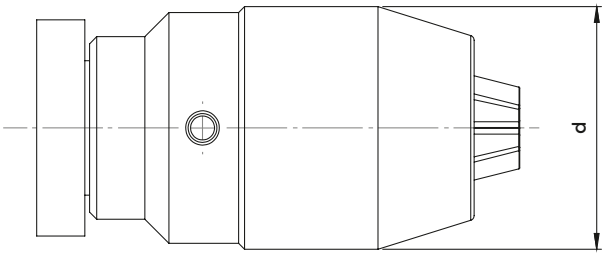

DIN 238

COD.	DESCRIPTION	d	RANGE	CLAMPS	SCREW	WRENCH
2800	B 10 - DC 6	33	0,5 ÷ 6,5	832-012014	9018	-
2801	B 10 - DC 8	38	0,5 ÷ 8	832-012015	9019	2368
2834	B 10 - DC 10	43	0,5 ÷ 10	832-012016	9020	2369
2802	B 12 - DC 8	38	0,5 ÷ 8	832-012015	9019	2368
2803	B 12 - DC 10	43	0,5 ÷ 10	832-012016	9020	2369
2804	B 12 - DC 13	50	0,5 ÷ 13	832-012017	9021	2370
2805	B 16 - DC 10	43	0,5 ÷ 10	832-012018	9022	2369
2806	B 16 - DC 13	50	0,5 ÷ 13	832-012017	9021	2370
2807	B 16 - DC 16	57	3 ÷ 16	832-012019	9023	2371
2808	B 18 - DC 16	57	3 ÷ 16	832-012019	9023	2371

Supplied complete with suitable wrench

HIGH PRECISION KEYLESS DRILL CHUCKS

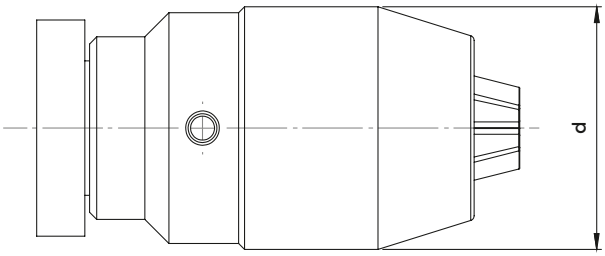

DIN 238

COD.	DESCRIPTION	d	RANGE	CLAMPS	SCREW	WRENCH
2853	B 10 - DC 8 Precision	38	0,5 ÷ 8	832-012015	9019	2368
2854	B 10 - DC 10 Precision	43	0,5 ÷ 10	832-012016	9020	2369
2810	B 12 - DC 8 Precision	38	0,5 ÷ 8	832-012015	9019	2368
2856	B 12 - DC 10 Precision	43	0,5 ÷ 10	832-012016	9020	2369
2858	B 12 - DC 13 Precision	50	0,5 ÷ 13	832-012020	9021	2370
2811	B 16 - DC 10 Precision	43	0,5 ÷ 10	832-012018	9022	2369
2812	B 16 - DC 13 Precision	50	0,5 ÷ 13	832-012020	9021	2370
2813	B 16 - DC 16 Precision	57	3 ÷ 16	832-012021	9023	2371
2818	B 18 - DC 16 Precision	57	3 ÷ 16	832-012021	9023	2371

Supplied complete with suitable wrench

MORSE TAPER ADAPTERS TO DIN 238 (ISO 239)

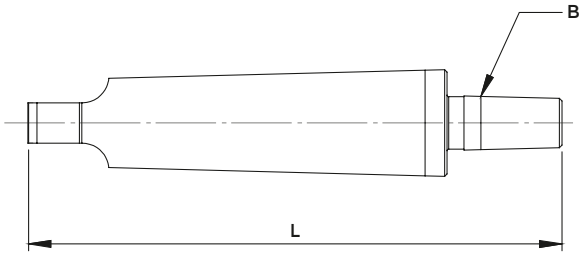

DIN 238-B

COD.	DESCRIPTION	CM	B	L
409601B10	CM 1 - B 10	1	10	83
409601B12	CM 1 - B 12	1	12	89
409601B16	CM 1 - B 16	1	16	99
409601B18	CM 1 - B 18	1	18	99
409602B10	CM 2 - B 10	2	10	105
409602B12	CM 2 - B 12	2	12	106
409602B16	CM 2 - B 16	2	16	112
409602B18	CM 2 - B 18	2	18	119
409602B22	CM 2 - B 22	2	22	130
409603B12	CM 3 - B 12	3	12	125
409603B16	CM 3 - B 16	3	16	134
409603B18	CM 3 - B 18	3	18	140
409603B22	CM 3 - B 22	3	22	147
409604B12	CM 4 - B 12	4	12	152
409604B16	CM 4 - B 16	4	16	156
409604B18	CM 4 - B 18	4	18	164
409604B22	CM 4 - B 22	4	22	176
409604B24	CM 4 - B 24	4	24	186
409605B16	CM 5 - B 16	5	16	190
409605B18	CM 5 - B 18	5	18	204
409605B22	CM 5 - B 22	5	22	213
409605B24	CM 5 - B 24	5	24	221

MORSE TAPER ADAPTERS WITH THREAD TO DIN 238 (ISO 239)

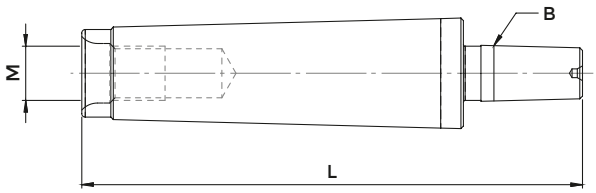

DIN 238-A

COD.	DESCRIPTION	CM	M	B	L
402402B10	CM 2 A - B 10	2	M 10	10	90
402402B12	CM 2 A - B 12	2	M 10	12	95
402402B16	CM 2 A - B 16	2	M 10	16	101
402403B16	CM 3 A - B 16	3	M 12	16	118
402404B16	CM 4 A - B 16	4	M 16	16	141

MORSE TAPER COLLETS FOR TWIST DRILLS

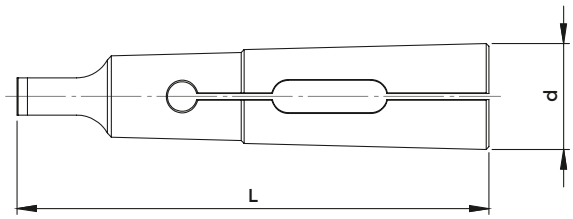

DIN 6329

COD.	DESCRIPTION	CM	RANGE	d	L	EINHEITS
5570 P	CM 0 - PUNTE	0	1 ÷ 5,5	9,2	59,5	510E
0640 P	CM 1 - PUNTE	1	1 ÷ 10,0	12,2	65,5	511E
0641 P	CM 2 - PUNTE	2	2,0 ÷ 15,0	18	80	514E
0642 P	CM 3 - PUNTE	3	8,0 ÷ 20,0	24,1	99	545E
0643 P	CM 4 - PUNTE	4	12,0 ÷ 25,0	31,6	124	548E
5571 P	CM 5 - PUNTE	5	32	44,7	156,2	599E

MORSE TAPER COLLETS FOR MILLING CUTTERS

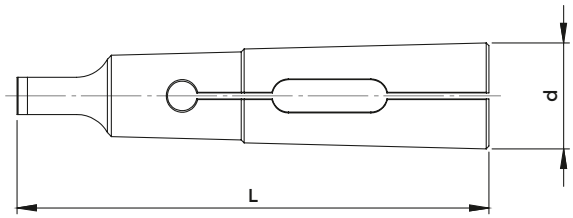

DIN 6328

COD.	DESCRIPTION	CM	RANGE	d	L	EINHEITS
5570 M	CM 0 - MASCHI	0	2,5 ÷ 4,5	9,2	59,5	500E
0640 M	CM 1 - MASCHI	1	2,5 ÷ 10,0	12,2	65,5	501E
0641 M	CM 2 - MASCHI	2	3,15 ÷ 14,0	18	80	504E
0642 M	CM 3 - MASCHI	3	6,0 ÷ 18,0	24,1	99	535E
0643 M	CM 4 - MASCHI	4	11,0 ÷ 25,0	31,6	124	538E
5571 M	CM 5 - MASCHI	5	20,0 ÷ 36,0	44,7	156,2	589E

THREADED MORSE TAPER COLLETS

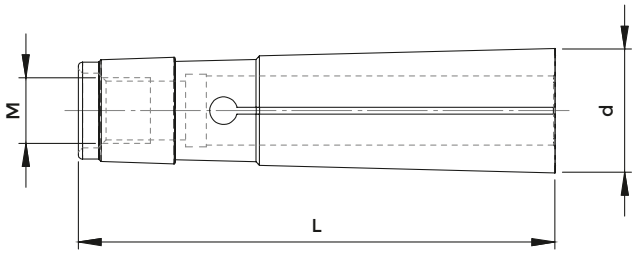

UNI 4702

COD.	DESCRIPTION	CM	RANGE	M	d	L	EINHEITS
0752	CM 2	2	1 ÷ 14	M 10	18	69	503E
0712	CM 3	3	2 ÷ 18	M 12	24,1	85,5	536E
0865	CM 4	4	4 ÷ 25	M 16	31,6	108,5	539E

MORSE TAPER FLOATING REAMER HOLDERS WITH ER COLLET

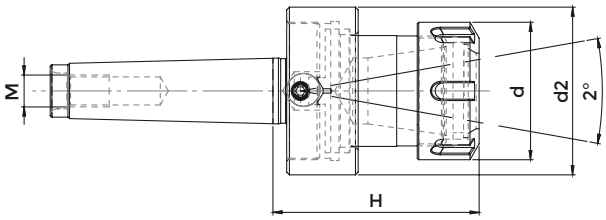

DIN 228-A

COD.	DESCRIPTION	CM	ER	d	d2	H	M	NUT	WRENCH	COLLET
3532	CM2 RM - ER 16	2	ER 16 1÷12	32	40	55	M 10	4993	3698	0364
3533	CM2 RM - ER 20	2	ER 20 1÷15	35	40	60	M 10	4994	3698	0787
3534	CM3 RM - ER 25	3	ER 25 1÷20	42	61	63	M 12	4995	3699	0996
3535	CM3 RM - ER 32	3	ER 32 2÷25	50	61	75	M 12	4996	3670	0988

ACCESSORIES

p. 649

p. 631

p. 653

MORSE TAPER SHELL REAMER HOLDERS WITH EJECTOR

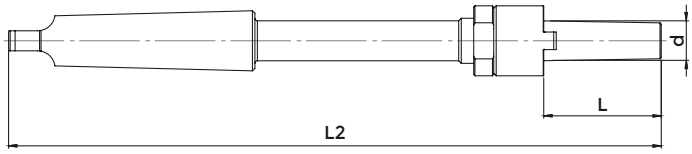

DIN 228-B

COD.	DESCRIPTION	CM	d	L	L2
1906	PA . CM 2 - D. 10	2	10	40	220
1907	PA . CM 3 - D. 13	3	13	45	250
1913	PA . CM 3 - D. 16	3	16	50	261
1914	PA . CM 3 - D. 19	3	19	56	270
1922	PA . CM 3 - D. 22	3	22	63	278
1925	PA . CM 4 - D. 19	4	19	56	298
1939	PA . CM 4 - D. 22	4	22	63	312
1944	PA . CM 4 - D. 27	4	27	71	325
1945	PA . CM 4 - D. 32	4	32	80	345
1946	PA . CM 5 - D. 27	5	27	71	359
1964	PA . CM 5 - D. 32	5	32	80	376
1966	PA . CM 5 - D. 40	5	40	90	396

MORSE TAPER BROACHING TOOLHOLDERS

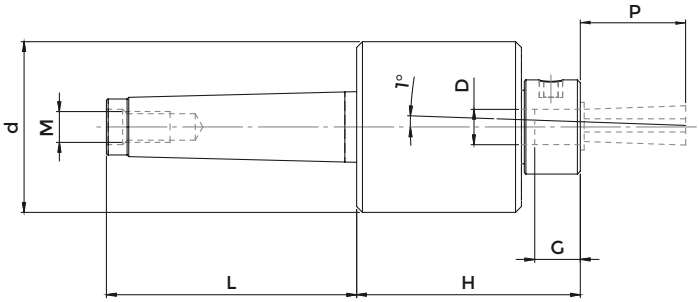

DIN 228-A

COD.	DESCRIPTION	CM	D	P	L	H	G	d	M
1668	P/UTENSILE a BROCCIARE - CM.2 / F. 8	2	8	**18**	69	38	10	32	M 10
1669	P/UTENSILE a BROCCIARE - CM.2 / F.12	2	12	**25**	69	46	16	44	M 10
1670	P/UTENSILE a BROCCIARE - CM.3 / F.16	3	16	**40**	85	76	21	58	M 12
1671	P/UTENSILE a BROCCIARE - CM.4 / F.16	4	16	**40**	109	76	21	58	M 16

For the right broaching toolholder working is important to respect broach **P** dimension. Informations from p. 553

BROACHES
p. 574

MORSE TAPER SHANK WITH THREAD DIN 6358 COMBI SHELL MILL HOLDERS

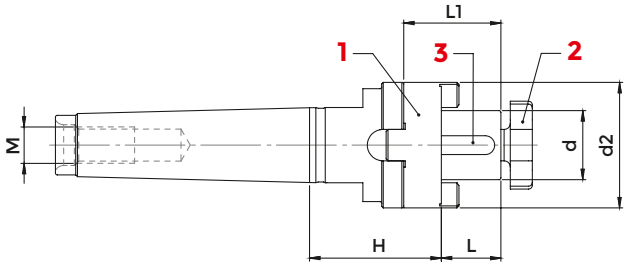

DIN 228-A

COD.	DESCRIPTION	CM	d	H	L1	L	d2	M	1 COUPLING	2 CROSS SCREW	3 KEY	WRENCH
4420	CM 2 A - D. 16 C	2	16	37	27	17	32	M 10	4090	4985	0115	4562
4421	CM 2 A - D. 22 C	2	22	42	31	19	40	M 10	4091	4986	0116	4563
4292	CM 3 A - D. 16 C	3	16	37	27	17	32	M 12	4090	4985	0115	4562
4293	CM 3 A - D. 22 C	3	22	42	31	19	40	M 12	4091	4986	0116	4563
4294	CM 3 A - D. 27 C	3	27	42	33	21	48	M 12	4092	4987	0122	4564
4295	CM 3 A - D. 32 C	3	32	63	38	24	58	M 12	4093	4988	0125	4565
4296	CM 4 A - D. 16 C	4	16	55	27	17	32	M 16	4090	4985	0115	4562
4297	CM 4 A - D. 22 C	4	22	55	31	19	40	M 16	4091	4986	0116	4563
4298	CM 4 A - D. 27 C	4	27	55	33	21	48	M 16	4092	4987	0122	4564
4299	CM 4 A - D. 32 C	4	32	55	38	24	58	M 16	4093	4988	0125	4565

ACCESSORIES

p. 694

p. 693

p. 694

MORSE TAPER SHANK WITH THREAD DIN 6358 COMBI SHELL MILL HOLDERS

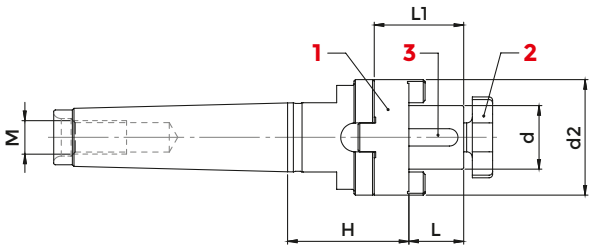

DIN 228-B

COD.	DESCRIPTION	CM	d	H	L1	L	d2	1 JOINT OF TRANSMISSION	2 CROSS SCREW	3 KEY	WRENCH
8656	CM 2 - D. 16 C	2	16	37	27	17	32	4090	4985	0115	4562
8657	CM 2 - D. 22 C	2	22	42	31	19	40	4091	4986	0116	4563
8659	CM 3 - D. 22 C	3	22	42	31	19	40	4091	4986	0116	4563
8660	CM 3 - D. 27 C	3	27	42	33	21	48	4092	4987	0122	4564
8661	CM 3 - D. 32 C	3	32	63	38	24	58	4093	4988	0125	4565
8662	CM 4 - D. 16 C	4	16	55	27	17	32	4090	4985	0115	4562
8663	CM 4 - D. 22 C	4	22	55	31	19	40	4091	4986	0116	4563
8664	CM 4 - D. 27 C	4	27	55	33	21	48	4092	4987	0122	4564
8665	CM 4 - D. 32 C	4	32	55	38	24	58	4093	4988	0125	4565

ACCESSORIES

p. 694

p. 693

p. 694

TENSION/COMPRESSION MORSE TAPER TAPPING HEADS WITH THREAD

Tapping adapters
from p. 673

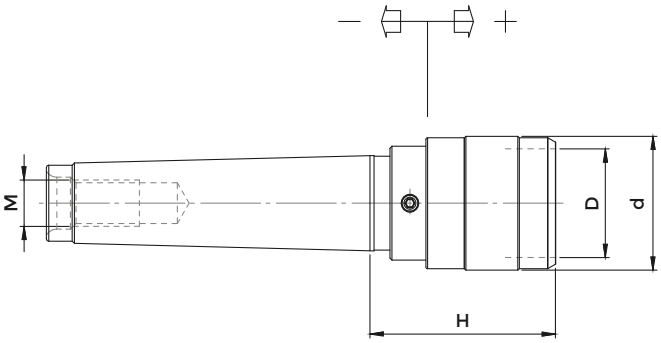

DIN 228-A

COD.	DESCRIPTION	CM	H	d	D	M	RANGE	TAP SIZE RANGE
4287	CM 2 A - B. 0	2	44	26	13	M 10	- 6,5 + 6,5	M 1 ÷ M 10
4286	CM 2 A - B. 1	2	46	38	19	M 10	-7,5 + 7,5	M 3 ÷ M 12 (* M 18)
4288	CM 3 A - B. 1	3	46	38	19	M 12	-7,5 + 7,5	M 3 ÷ M 12 (* M 18)
4289	CM 3 A - B. 2	3	70	55	31	M 12	-12,5 + 12,5	M 6 ÷ M 20 (* M 30)
4290	CM 4 A - B. 2	4	71	55	31	M 16	-12,5 + 12,5	M 6 ÷ M 20 (* M 30)
4291	CM 4 A - B. 3	4	104	79	48	M 16	-20,0 + 20,0	M 14 ÷ M 33 (* M 48)
4426	CM 5 A - B. 3	5	104	79	48	M 20	-20,0 + 20,0	M 14 ÷ M 33 (* M 48)

*Adapters with screw

TENSION/COMPRESSION MORSE TAPER TAPPING HEADS WITH TENON

Tapping adapters
from p. 673

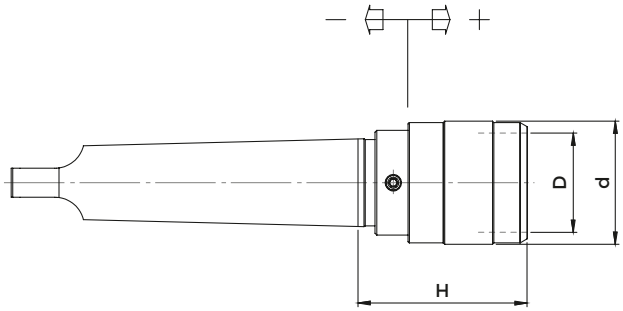

DIN 228-B

COD.	DESCRIPTION	CM	H	d	D	RANGE	TAP SIZE RANGE
4278	CM 2 - B. 0	2	44	26	13	- 6,5 + 6,5	M 1 ÷ M 10
3846	CM 2 - B. 1	2	46	38	19	-7,5 + 7,5	M 3 ÷ M 12 (* M 18)
3847	CM 3 - B. 1	3	46	38	19	-7,5 + 7,5	M 3 ÷ M 12 (* M 18)
3848	CM 3 - B. 2	3	69	55	31	-12,5 + 12,5	M 6 ÷ M 20 (* M 30)
3849	CM 4 - B. 2	4	70	55	31	-12,5 + 12,5	M 6 ÷ M 20 (* M 30)
3850	CM 4 - B. 3	4	104	79	48	-20,0 + 20,0	M 14 ÷ M 33 (* M 48)
4427	CM 5 - B. 3	5	104	79	48	-20,0 + 20,0	M 14 ÷ M 33 (* M 48

*Adapters with screw

MORSE TAPER SOLID TAPPING HEADS WITH THREAD

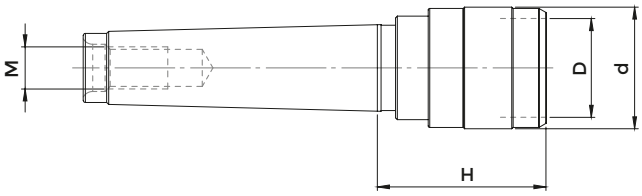

Tapping adapters
from p. 673

DIN 228-A

COD.	DESCRIPTION	CM	H	d	D	M	TAP SIZE RANGE
4696	CM 2 A FISSO - B. 1	2	44	33	19	M 10	M 3 ÷ M 12 (* M 18)
4697	CM 2 A FISSO - B. 2	2	61	50	31	M 10	M 6 ÷ M 20 (* M 30)
4698	CM 3 A FISSO - B. 1	3	44	33	19	M 12	M 3 ÷ M 12 (* M 18)
4699	CM 3 A FISSO - B. 2	3	61	50	31	M 12	M 6 ÷ M 20 (* M 30)

MORSE TAPER SOLID TAPPING HEADS WITH TENON

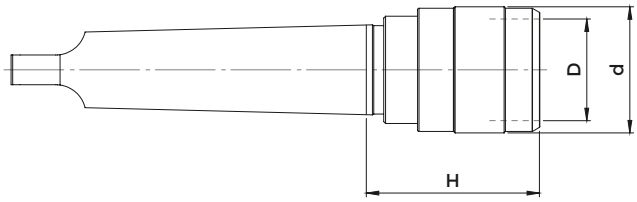

Tapping adapters
from p. 673

DIN 228-B

COD.	DESCRIPTION	CM	H	d	D	TAP SIZE RANGE
4279	CM 1 FISSO - B. 0	1	39	23	13	M 1 ÷ M 10
4282	CM 2 FISSO - B. 0	2	40	23	13	M 1 ÷ M 10
4283	CM 2 FISSO - B. 1	2	45	33	19	M 3 ÷ M 12 (* M 18)
4027	CM 2 FISSO - B. 2	2	61	50	31	M 6 ÷ M 20 (* M 30)
4284	CM 3 FISSO - B. 1	3	45	33	19	M 3 ÷ M 12 (* M 18)
4285	CM 3 FISSO - B. 2	3	61	50	31	M 6 ÷ M 20 (* M 30)
4340	CM 4 FISSO - B. 2	4	61	50	31	M 6 ÷ M 20 (* M 30)

MORSE TAPER OPEN-ENDED SLEEVES

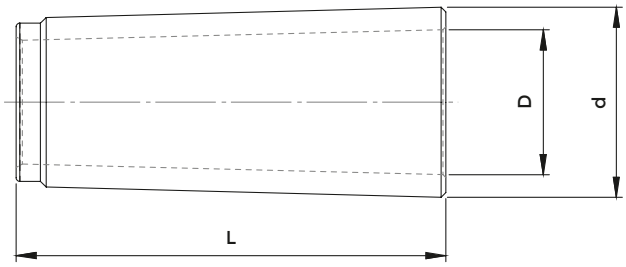

RCM.P

COD.	DESCRIPTION	EXTERNAL MT	INTERNAL MT	L	d	D
409700021	RCM. P/2 - 1	2	1	60	18	12
409700031	RCM. P/3 - 1	3	1	70	24,1	12
409700032	RCM. P/3 - 2	3	2	70	24,1	17,7
409700042	RCM. P/4 - 2	4	2	70	31,6	17,7
409700043	RCM. P/4 - 3	4	3	70	31,6	23,8
409700052	RCM. P/5 - 2	5	2	77	44,7	17,7
409700053	RCM. P/5 - 3	5	3	77	44,7	23,8
409700054	RCM. P/5 - 4	5	4	77	44,7	31,2
409700063	RCM. P/6 - 3	6	3	110	63,8	23,8
409700064	RCM. P/6 - 4	6	4	110	63,8	31,2
409700065	RCM. P/6 - 5	6	5	110	63,8	44,3

MORSE TAPER SLEEVES WITH RELEASE NUT

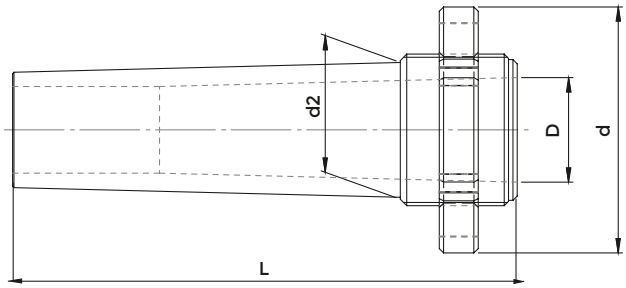

RCM.E

COD.	DESCRIPTION	EXTERNAL MT	INTERNAL MT	L	d	D	d2
404200021	RCM.E / 2 - 1	2	1	84	38	12,0	17,7
404200031	RCM.E / 3 - 1	3	1	102	48	12,0	23,8
404200032	RCM.E / 3 - 2	3	2	102	48	17,7	23,8
404200041	RCM.E / 4 - 1	4	1	122	57	12,00	31,2
404200042	RCM.E / 4 - 2	4	2	122	57	17,7	31,2
404200043	RCM.E / 4 - 3	4	3	122	57	23,8	31,2
404200052	RCM.E / 5 - 2	5	2	153	73	17,7	44,3
404200053	RCM.E / 5 - 3	5	3	153	73	23,8	44,3
404200054	RCM.E / 5 - 4	5	4	153	73	31,2	44,3
404200063	RCM.E / 6 - 3	6	3	212	98	23,8	63,3
404200064	RCM.E / 6 - 4	6	4	212	98	31,2	63,3
404200065	RCM.E / 6 - 5	6	5	212	98	44,3	63,3

MORSE TAPER ADAPTERS

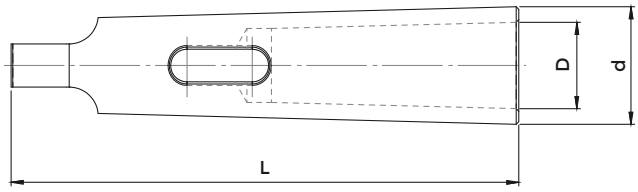

RCM.C - DIN 2185

COD.	DESCRIPTION	EXTERNAL MT	INTERNAL MT	L	d	D
409800010	RCM.C/ 1 - 0	1	0	80	12,2	9,045
409800021	RCM.C/ 2 - 1	2	1	92	18	12,065
409800031	RCM.C/ 3 - 1	3	1	99	24,1	12,065
409800032	RCM.C/ 3 - 2	3	2	112	24,1	17,78
409800041	RCM.C/ 4 - 1	4	1	124	31,6	12,065
409800042	RCM.C/ 4 - 2	4	2	124	31,6	17,78
409800043	RCM.C/ 4 - 3	4	3	140	31,6	23,825
409800051	RCM.C/ 5 - 1	5	1	156	44,7	12,065
409800052	RCM.C/ 5 - 2	5	2	156	44,7	17,78
409800053	RCM.C/ 5 - 3	5	3	156	44,7	23,825
409800054	RCM.C/ 5 - 4	5	4	171	44,7	31,267
409800062	RCM.C/ 6 - 2	6	2	218	63,8	17,78
409800063	RCM.C/ 6 - 3	6	3	218	63,8	23,825
409800064	RCM.C/ 6 - 4	6	4	218	63,8	31,267
409800065	RCM.C/ 6 - 5	6	5	218	63,8	44,399

EXTENDED MORSE TAPER ADAPTERS

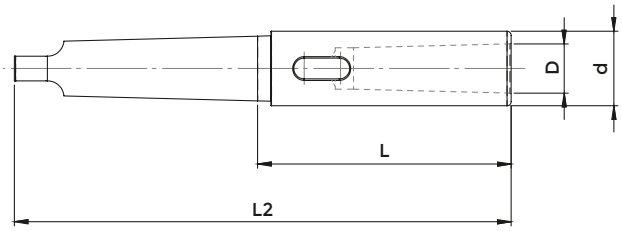

RCM.L - DIN 2187

COD.	DESCRIPTION	EXTERNAL MT	INTERNAL MT	L	L2	d	D
409900011	RCM.L / 1 - 1	1	1	83	145	20	12,065
409900012	RCM.L / 1 - 2	1	2	98	160	30	17,78
409900021	RCM.L / 2 - 1	2	1	85	160	20	12,065
409900022	RCM.L / 2 - 2	2	2	100	175	30	17,78
409900023	RCM.L/ 2 - 3	2	3	121	196	36	23,825
409900024	RCM.L/ 2 - 4	2	4	145	220	48	31,267
409900031	RCM.L / 3 - 1	3	1	81	175	20	12,065
409900032	RCM.L / 3 - 2	3	2	100	194	30	17,78
409900033	RCM.L / 3 - 3	3	3	112	215	36	23,825
409900034	RCM.L / 3 - 4	3	4	146	240	48	31,267
409900041	RCM.L / 4 - 1	4	1	82,5	200	20	12,065
409900042	RCM.L / 4 - 2	4	2	97,5	215	30	17,78
409900043	RCM.L / 4 - 3	4	3	122,5	240	36	23,825
409900044	RCM.L / 4 - 4	4	4	147,5	265	48	31,267
409900045	RCM.L / 4 - 5	4	5	182,5	300	63	44,399
409900051	RCM.L / 5 - 1	5	1	82,5	232	20	12,065
409900052	RCM.L / 5 - 2	5	2	97,5	247	30	17,78
409900053	RCM.L / 5 - 3	5	3	118,5	268	36	23,825
409900054	RCM.L / 5 - 4	5	4	150,5	300	48	31,267
409900055	RCM.L / 5 - 5	5	5	185,5	335	63	44,399
409900056	RCM.L / 5 - 6	5	6	247	396	82	63,348
409900063	RCM.L / 6 - 3	6	3	120	330	36	23,825
409900064	RCM.L / 6 - 4	6	4	180	355	48	31,267
409900065	RCM.L / 6 - 5	6	5	180	390	63	44,399
409900066	RCM.L / 6 - 6	6	6	241	451	82	63,348

EXTRA-LONG MORSE TAPER EXTENSIONS

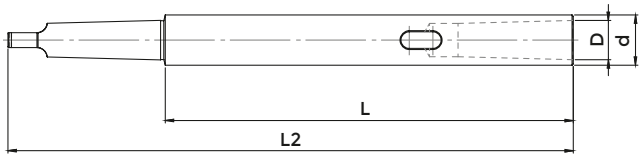

RXL

COD.	DESCRIPTION	EXTERNAL MT	INTERNAL MT	L	L2	d	D
8800	RXL 1 - 1 / 200	1	1	138	200	20	12,065
8801	RXL 1 - 1 / 250	1	1	188	250	20	12,065
8802	RXL 1 - 1 / 300	1	1	238	300	20	12,065
8803	RXL 1 - 1 / 350	1	1	288	350	20	12,065
8804	RXL 1 - 1 / 400	1	1	338	400	20	12,065
8805	RXL 1 - 1 / 450	1	1	388	450	20	12,065
8806	RXL 1 - 1 / 500	1	1	438	500	20	12,065
8807	RXL 2 - 2 / 200	2	2	125	200	25	17,78
8808	RXL 2 - 2 / 250	2	2	175	250	25	17,78
8809	RXL 2 - 2 / 300	2	2	225	300	25	17,78
8810	RXL 2 - 2 / 350	2	2	275	350	25	17,78
8811	RXL 2 - 2 / 400	2	2	325	400	25	17,78
8812	RXL 2 - 2 / 450	2	2	375	450	25	17,78
8813	RXL 2 - 2 / 500	2	2	425	500	25	17,78
8814	RXL 2 - 2 / 600	2	2	525	600	25	17,78
8815	RXL 3 - 3 / 250	3	3	156	250	32	23,825
8816	RXL 3 - 3 / 300	3	3	206	300	32	23,825
8817	RXL 3 - 3 / 350	3	3	256	350	32	23,825
8818	RXL 3 - 3 / 400	3	3	306	400	32	23,825
8819	RXL 3 - 3 / 450	3	3	356	450	32	23,825
8820	RXL 3 - 3 / 500	3	3	405	500	32	23,825
8821	RXL 3 - 3 / 600	3	3	506	600	32	23,825
8822	RXL 4 - 4 / 300	4	4	182,5	300	40	31,267
8823	RXL 4 - 4 / 350	4	4	232,5	350	40	31,267
8824	RXL 4 - 4 / 400	4	4	282,5	400	40	31,267
8825	RXL 4 - 4 / 450	4	4	332,5	450	40	31,267
8826	RXL 4 - 4 / 500	4	4	382,5	500	40	31,267
8827	RXL 4 - 4 / 600	4	4	482,5	600	40	31,267

CONE EJECTORS

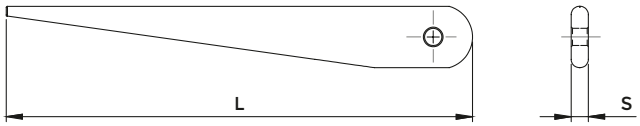

DIN 317

COD.	DESCRIPTION	CM	L	S
5235	BC.CM 0	0	90	4
5236	BC.CM 1	1	140	5
5236	BC.CM 2	2	140	5
5237	BC.CM 3	3	190	7
5238	BC.CM 4	4	225	10
5239	BC.CM 5	5	265	15
5239	BC.CM 6	6	265	15

CONE EJECTORS UNIVERSAL VERSION

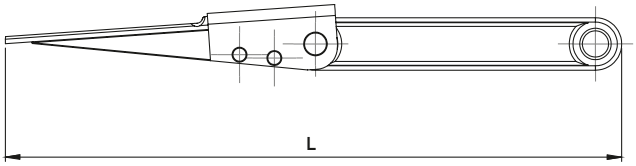

DIN 317

COD.	DESCRIPTION	CM	L
5288	BU . CM 1 - 2 - 3	1-2-3	317
5289	BU . CM 4 - 5 - 6	4-5-6	380

MORSE TAPER SHANK STORAGE

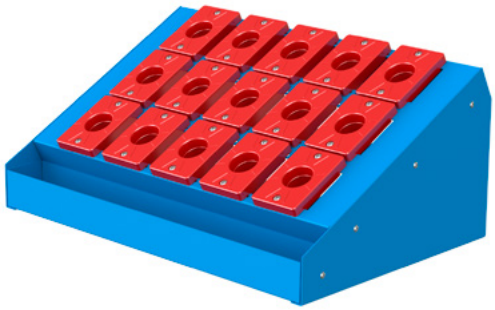

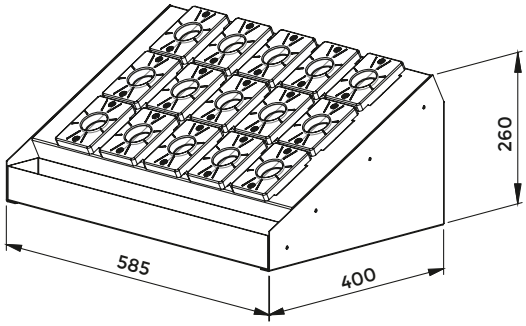

DIN 807

COD.	DESCRIPTION	MT	N° OF SEATS	MORSE TAPER BUSH	SCREW
9468	MAG. CM 2	2	15	9448	0033
9469	MAG. CM 3	3	15	9449	0033
3696	MAG. CM 4	4	15	4400	0033
3702G	MAG. CM 5	5	15	4418G	0033

Supplied complete of red tool holder bushings

BENCH SUPPORTS FOR MORSE TAPER SHANK

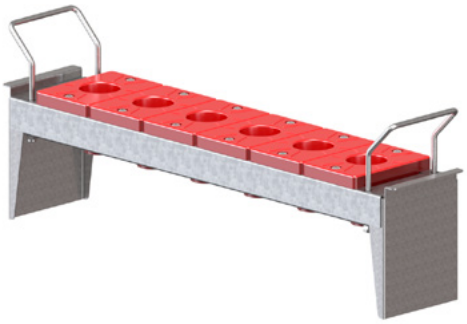

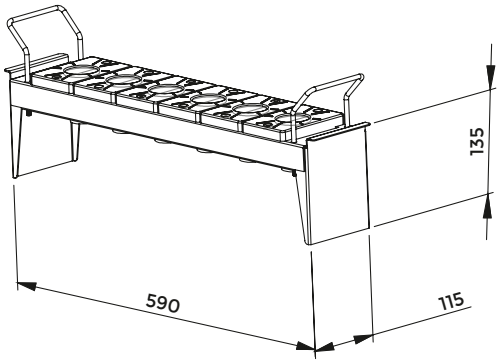

DIN 317

COD.	DESCRIPTION	MT	N° OF SEATS	MORSE TAPER BUSH
9458	UNITÀ CM 2	2	6	9448
9459	UNITÀ CM 3	3	6	9449
4329	UNITÀ CM 4	4	6	4400
4330G	UNITÀ CM 5	5	6	4418G

Supplied complete of red tool holder bushings

ER COLLETS

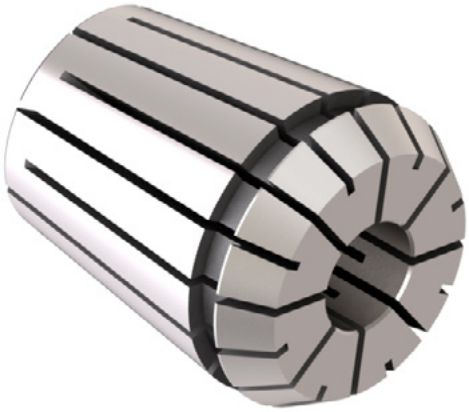

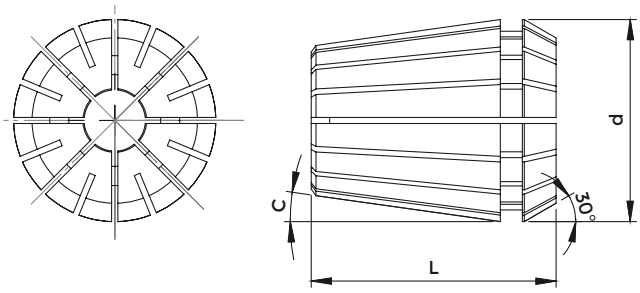

DIN 6499/B

COD.	TYPE	RANGE	CLAMPING	STEP	d	L	C	EINHEITS
0554	ER 8	1 ÷ 5	mm 0,5	0,5	8,5	13,5	8 °	4004E
5573	ER 11	1 ÷ 7 OVERSIZE 7,5 ÷ 8	mm 0,5 mm 0,5	0,5	11,5	18,0 OVERSIZE → 15,0	8 °	4008E
5601	ER 12	1 ÷ 3 3 ÷ 8	mm 0,5 mm 1,0	0,5	12	19,5	8 °	424E
0364	ER 16	1 ÷ 3 3 ÷ 10 OVERSIZE 10,5 ÷ 12	mm 0,5 mm 1,0 mm 0,5	0,5	17	27,5 OVERSIZE → 21,5	8 °	426E
0787	ER 20	1÷ 3 3 ÷ 13 OVERSIZE 14 ÷ 15	mm 0,5 mm 1,0 mm 0,5	0,5	21	31,5 OVERSIZE → 26,5	8 °	428E
0996	ER 25	1 ÷ 3 3 ÷ 16 OVERSIZE 16,5 ÷ 20	mm 0,5 mm 1,0 mm 0,5	0,5	26	34,0 OVERSIZE → 28,0	8 °	430E
0988	ER 32	2 ÷ 20 OVERSIZE 21 ÷ 25	mm 1,0 mm 0,5	0,5	33	40,0 OVERSIZE → 34,0	8 °	470E
0821	ER 40	3 ÷ 30 OVERSIZE 31 ÷ 32	mm 1,0 mm 0,5	0,5	41	46,0 OVERSIZE → 39,5	8 °	472E
4055	ER 50	6 ÷ 34 OVERSIZE 35 ÷ 36	mm 1,0 mm 1,0	1,0	52	60,0 OVERSIZE 60,0	8 °	477E
4056	ER 60	10 ÷ 40	mm 2,0	2,0	61	60	10°	494E

PLASTIC EMPTY TRAY

COD.	COLLETS	N°OF LOCATIONS
3672	ER 8	16
3673	ER 11	16
3673	ER 12	16
3674	ER 16	16
3675	ER 20	16
3676	ER 25	20
3677	ER 32	20
3678	ER 40	28

WOODEN EMPTY CASE

COD.	N°OF LOCATIONS
3974	10
3975	15
3975	15
3976	12
3977	12
3978	15
3979	18
3980	24

EMPTY CASE WITH SPINDLE SEAT

COD.	N°OF LOCATIONS
3690	16
3691	16
3691	16
3692	16
3693	16
7022	28
7023	28
7024	28

ER COLLETS - REDUCED SET

	COD.	DESCRIPTION	DIAMETERS	NUMBER OF COLLETS
IN SINGLE PACKS	7463	ER 8 Reduced	Ø 1 - 2 - 3 - 4 - 5	5
	7464	ER 11 Reduced	Ø 1 - 2 - 3 - 4 - 5 - 6 - 7	7
	7465	ER 16 Reduced	Ø 2 - 4 - 6 - 8 -10	5
	7466	ER 20 Reduced	Ø 2 - 4 - 6 - 8 -10 -12	6
	7467	ER 25 Reduced	Ø 4 - 6 - 8 -10 -12 -16	6
	7468	ER 32 Reduced	Ø 4 - 6 - 8 -10 -12 -16 - 20	7
	7469	ER 40 Reduced	Ø 4 - 6 - 8 -10 -12 -16 - 20 - 25	8
IN PLASTIC TRAY	4048	ER 8 Reduced	Ø 1 - 2 - 3 - 4 - 5	5
	4049	ER 11 Reduced	Ø 1 - 2 - 3 - 4 - 5 - 6 - 7	7
	4050	ER 16 Reduced	Ø 2 - 4 - 6 - 8 -10	5
	4051	ER 20 Reduced	Ø 2 - 4 - 6 - 8 -10 -12	6
	4052	ER 25 Reduced	Ø 4 - 6 - 8 -10 -12 -16	6
	4053	ER 32 Reduced	Ø 4 - 6 - 8 -10 -12 -16 - 20	7
	4054	ER 40 Reduced	Ø 4 - 6 - 8 -10 -12 -16 - 20 - 25	8
IN WOODEN CASE	7337	ER 8 Reduced	Ø 1 - 2 - 3 - 4 - 5	5
	7338	ER 11 Reduced	Ø 1 - 2 - 3 - 4 - 5 - 6 - 7	7
	7339	ER 16 Reduced	Ø 2 - 4 - 6 - 8 -10	5
	7340	ER 20 Reduced	Ø 2 - 4 - 6 - 8 -10 -12	6
	7341	ER 25 Reduced	Ø 4 - 6 - 8 -10 -12 -16	6
	7342	ER 32 Reduced	Ø 4 - 6 - 8 -10 -12 -16 - 20	7
	7343	ER 40 Reduced	Ø 4 - 6 - 8 -10 -12 -16 - 20 - 25	8

ER COLLETS - COMPLETE SET

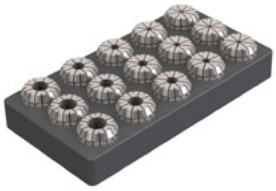

	COD.	DESCRIPTION	DIAMETERS	NUMBER OF COLLETS
IN SINGLE PACKS	SERIE-ER8	ER 8 Complete	from Ø 1 to Ø 5 - progression 0,5	9
	SERIE-ER11	ER 11 Complete	from Ø 1 to Ø 7 - progression 0,5	13
	7472	ER 12 Complete	from Ø 1 to Ø 7 - progression 0,5 - 1	9
	SERIE-ER16	ER 16 Complete	from Ø 1 to Ø 10 - progression 1	10
	SERIE-ER20	ER 20 Complete	from Ø 2 to Ø 13 - progression 1	12
	SERIE-ER25	ER 25 Complete	from Ø 2 to Ø 16 - progression 1	15
	SERIE-ER32	ER 32 Complete	from Ø 3 to Ø 20 - progression 1	18
	SERIE-ER40	ER 40 Complete	from Ø 4 to Ø 26 - progression 1	9
IN PLASTIC TRAY	4058	ER 8 Complete	from Ø 1 to Ø 5 - progression 0,5	9
	4060	ER 11 Complete	from Ø 1 to Ø 7 - progression 0,5	13
	4061	ER 12 Complete	from Ø 1 to Ø 7 - progression 0,5 - 1	9
	4062	ER 16 Complete	from Ø 1 to Ø 10 - progression 1	10
	4063	ER 20 Complete	from Ø 2 to Ø 13 - progression 1	12
	4064	ER 25 Complete	from Ø 2 to Ø 16 - progression 1	15
	4065	ER 32 Complete	from Ø 3 to Ø 20 - progression 1	18
	4066	ER 40 Complete	from Ø 4 to Ø 26 - progression 1	23
IN WOODEN CASE	7344	ER 8 Complete	from Ø 1 to Ø 5 - progression 0,5	9
	7345	ER 11 Complete	from Ø 1 to Ø 7 - progression 0,5	13
	7346	ER 12 Complete	from Ø 1 to Ø 7 - progression 0,5 - 1	9
	7347	ER 16 Complete	from Ø 1 to Ø 10 - progression 1	10
	7348	ER 20 Complete	from Ø 2 to Ø 13 - progression 1	12
	7349	ER 25 Complete	from Ø 2 to Ø 16 - progression 1	15
	7350	ER 32 Complete	from Ø 3 to Ø 20 - progression 1	18
	7351	ER 40 Complete	from Ø 4 to Ø 26 - progression 1	23

ER COLLETS - SET WITH OVERSIZE DIAMETERS

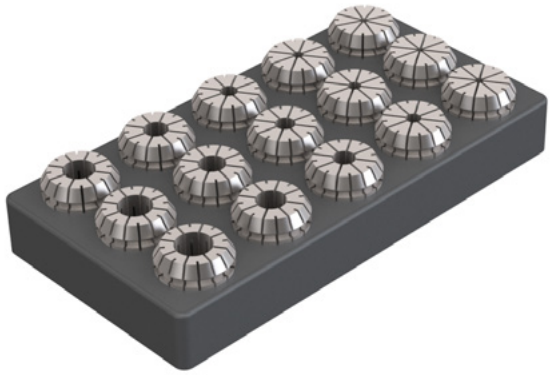

	COD.	DESCRIPTION	DIAMETERS	STEP	N°OF COLLETS
IN PLASTIC TRAY	7352	ER 11 Oversize	from Ø 1 to Ø 8	0,5	15
	7353	ER 16 Oversize	from Ø 1 to Ø 12	1	12
	7354	ER 20 Oversize	from Ø 2 to Ø 15	1	14
	7355	ER 25 Oversize	from Ø 2 to Ø 20	1	19
	7356	ER 32 Oversize	from Ø 6 to Ø 25	1	20
	7357	ER 40 Oversize	from Ø 6 to Ø 32	1	27

ER COLLETS – COMPLETE SET

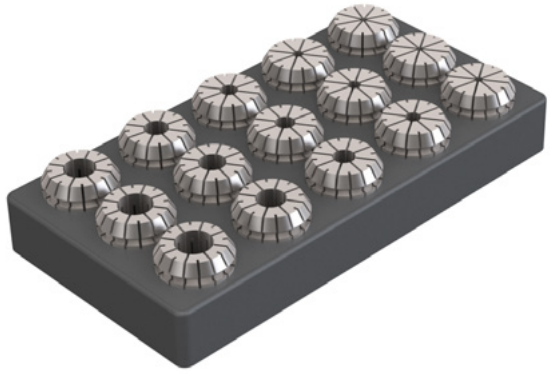

	COD.	DESCRIPTION	DIAMETERS	N°OF COLLETS
IN PLASTIC TRAY	7746	ER 16 Integrale	da Ø 1 a Ø 10 **+ half measures** da Ø 1,5 a Ø 9,5	19
	7747	ER 20 Integrale	da Ø 1 a Ø 13 **+ half measures** da Ø 1,5 a Ø 12,5	25
	7748	ER 25 Integrale	da Ø 1 a Ø 16 **+ half measures** da Ø 1,5 a Ø 15,5	31
	7749	ER 32 Integrale	da Ø 2 a Ø 20 **+ half measures** da Ø2,5 a Ø 19,5	37
	7750	ER 40 Integrale	da Ø 3 a Ø 30	28

ER COLLETS - REDUCED SET IN CASE WITH SPINDLE SEAT

COD.	DESCRIPTION	DIAMETERS	N°OF COLLETS
7487	ER 8 Set Reduced	Ø 1 - 2 - 3 - 4 - 5	5
7488	ER 11 Set Reduced	Ø 1 - 2 - 3 - 4 - 5 - 6 - 7	7
7489	ER 16 Set Reduced	Ø 2 - 4 - 6 - 8 -10	5
7490	ER 20 Set Reduced	Ø 2 - 4 - 6 - 8 -10 -12	6
7491	ER 25 Set Reduced	Ø 4 - 6 - 8 -10 -12 -16	6
7492	ER 32 Set Reduced	Ø 4 - 6 - 8 -10 -12 -16 - 20	7
7493	ER 40 Set Reduced	Ø 4 - 6 - 8 -10 -12 -16 - 20 - 25	8

It is possible to complete all the sets in case with collet chuck and wrench you need

ER COLLETS - COMPLETE SET IN CASE WITH SPINDLE SEAT

COD.	DESCRIPTION	DIAMETERS	N°OF COLLETS
7551	ER 8 Set Complete	from Ø 1 to Ø 5 - progression 0,5	9
7552	ER 11 Set Complete	from Ø 1 to Ø 7 - progression 0,5	13
7599	ER 12 Set Complete	from Ø 1 to Ø 7 - progression 0,5 - 1	9
7553	ER 16 Set Complete	from Ø 1 to Ø 10 - progression 1	10
7554	ER 20 Set Complete	from Ø 2 to Ø 13 - progression 1	12
7555	ER 25 Set Complete	from Ø 2 to Ø 16 - progression 1	15
7556	ER 32 Set Complete	from Ø 3 to Ø 20 - progression 1	18
7557	ER 40 Set Complete	from Ø 4 to Ø 26 - progression 1	23

It is possible to complete all the sets in case with collet chuck and wrench you need

ER COLLETS - REDUCED SET AND MINI WRENCH IN CASE WITH SPINDLE SEAT

COD.	DESCRIPTION	DIAMETERS	N°OF COLLETS	WRENCH
7751	ER 8 Reduced + Mini Wrench	Ø 1 - 2 - 3 - 4 - 5	5	5717
7752	ER 11 Reduced + Mini Wrench	Ø 1 - 2 - 3 - 4 - 5 - 6 - 7	7	5718
7753	ER 16 Reduced + Mini Wrench	Ø 2 - 4 - 6 - 8 - 10	5	5719
7754	ER 20 Reduced + Mini Wrench	Ø 2 - 4 - 6 - 8 - 10 - 12	6	5720
7755	ER 25 Reduced + Mini Wrench	Ø 4 - 6 - 8 -10 - 12 - 16	6	5721

It is possible to complete all the sets in case with collet chuck and wrench you need

ER COLLETS - COMPLETE SET AND MINI WRENCH IN CASE WITH SPINDLE SEAT

COD.	DESCRIPTION	DIAMETERS	N°OF COLLETS	WRENCH
7001	ER 8 Complete + WRENCH Mini	da Ø 1 a Ø 5	9	5717
7002	ER 11 Complete + WRENCH Mini	da Ø 1 a Ø 7	13	5718
7003	ER 16 Complete + WRENCH Mini	da Ø 1 a Ø 10	10	5719
7004	ER 20 Complete + WRENCH Mini	da Ø 2 a Ø 13	12	5720
7005	ER 25 Complete + WRENCH Mini	da Ø 2 a Ø 16	15	5721

It is possible to complete all the sets in case with collet chuck and wrench you need

ER COLLETS - REDUCED SET AND STANDARD WRENCH IN CASE WITH SPINDLE SEAT

COD.	DESCRIPTION	DIAMETERS	N°OF COLLETS	WRENCH
7495	ER 16 Reduced + Standard Wrench	Ø 2 - 4 - 6 - 8 - 10	5	3698
7496	ER 20 Reduced + Standard Wrench	Ø 2 - 4 - 6 - 8 - 10 - 12	6	3699
7497	ER 25 Reduced + Standard Wrench	Ø 4 - 6 - 8 - 10 - 12 - 16	6	3669
7498	ER 32 Reduced + Standard Wrench	Ø 4 - 6 - 8 - 10 - 12 -16 - 20	7	3670
7499	ER 40 Reduced + Standard Wrench	Ø 4 - 6 - 8 - 10 - 12 - 16 - 20 - 25	8	3671

It is possible to complete all the sets in case with collet chuck and wrench you need

ER COLLETS - COMPLETE SET AND STANDARD WRENCH IN CASE WITH SPINDLE SEAT

COD.	DESCRIPTION	DIAMETERS	N°OF COLLETS	WRENCH
7536	ER 16 Complete + Standard Wrench	from Ø 1 to Ø 10	10	3698
7537	ER 20 Complete + Standard Wrench	from Ø 2 to Ø 13	12	3699
7538	ER 25 Complete + Standard Wrench	from Ø 2 to Ø 16	15	3669
7539	ER 32 Complete + Standard Wrench	from Ø 3 to Ø 20	18	3670
7540	ER 40 Complete + Standard Wrench	from Ø 4 to Ø 26	23	3671

It is possible to complete all the sets in case with collet chuck and wrench you need

HIGH PRECISION ER COLLETS

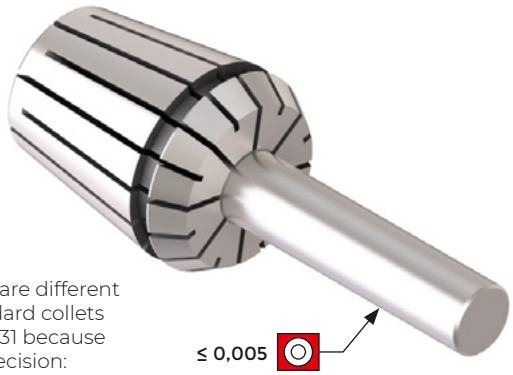

ER-HP collets are different from ER standard collets on p. pagina 631 because of the high precision:
< 0,005 runout accuracy

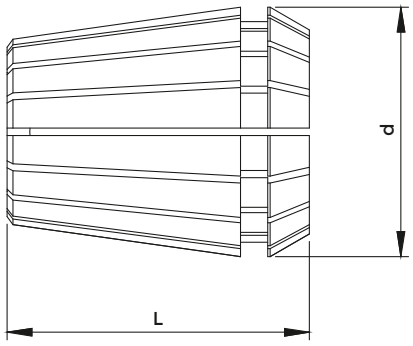

DIN 6499/B

COD.	DESCRIPTION	RANGE	d	L
0554 HP	ER 8 HP	1 ÷ 5	8,5	13,5
5573 HP	ER 11 HP	1 ÷ 7 - OVERSIZE 7,5 ÷ 8	11,5	18,0 - OVERSIZE → 15,0
0364 HP	ER 16 HP	1 ÷ 10 - OVERSIZE 10,5 ÷ 12	17	27,5 - OVERSIZE → 21,5
0787 HP	ER 20 HP	1 ÷ 13 - OVERSIZE 14 ÷ 15	21	31,5 - OVERSIZE → 26,5
0996 HP	ER 25 HP	1 ÷ 16 - OVERSIZE 17 ÷ 20	26	34,0 - OVERSIZE → 28,0
0988 HP	ER 32 HP	2 ÷ 20 - OVERSIZE 21 ÷ 25	33	40,0 - OVERSIZE → 34,0
0821 HP	ER 40 HP	3 ÷ 30 - OVERSIZE 31 ÷ 32	41	46,0 - OVERSIZE → 39,5
4055 HP	ER 50 HP	6 ÷ 34 - OVERSIZE 35 ÷ 36	52	60,0 - OVERSIZE 60,0

REDUCED SET OF COLLETS ER-HP TYPE

	COD.	DESCRIPTION	DIAMETERS	N°OF COLLETS
IN PLASTIC TRAY	7558	ER 8 HP Reduced	Ø 1 - 2 - 3 - 4 - 5	5
	7559	ER 11 HP Reduced	Ø 1 - 2 - 3 - 4 - 5 - 6 - 7	7
	7560	ER 16 HP Reduced	Ø 2 - 4 - 6 - 8 - 10	5
	7561	ER 20 HP Reduced	Ø 2 - 4 - 6 - 8 - 10 - 12	6
	7562	ER 25 HP Reduced	Ø 4 - 6 - 8 - 10 - 12 - 16	6
	7563	ER 32 HP Reduced	Ø 4 - 6 - 8 - 10 - 12 - 16 - 20	7
	7564	ER 40 HP Reduced	Ø 4 - 6 - 8 - 10 - 12 - 16 - 20 - 25	8
IN WOODEN CASE	7572	ER 8 HP Reduced	Ø 1 - 2 - 3 - 4 - 5	5
	7573	ER 11 HP Reduced	Ø 1 - 2 - 3 - 4 - 5 - 6 - 7	7
	7574	ER 16 HP Reduced	Ø 2 - 4 - 6 - 8 - 10	5
	7575	ER 20 HP Reduced	Ø 2 - 4 - 6 - 8 - 10 - 12	6
	7576	ER 25 HP Reduced	Ø 4 - 6 - 8 - 10 - 12 - 16	6
	7577	ER 32 HP Reduced	Ø 4 - 6 - 8 - 10 - 12 - 16 - 20	7
	7578	ER 40 HP Reduced	Ø 4 - 6 - 8 - 10 - 12 - 16 - 20 - 25	8

COMPLETE SET OF COLLETS ER-HP TYPE

	COD.	DESCRIPTION	DIAMETERS	N°OF COLLETS
IN PLASTIC TRAY	7565	ER 8 HP Complete	from Ø 1 to Ø 5	9
	7566	ER 11 HP Complete	from Ø 1 to Ø 7	13
	7567	ER 16 HP Complete	from Ø 1 to Ø 10	10
	7568	ER 20 HP Complete	from Ø 2 to Ø 13	12
	7569	ER 25 HP Complete	from Ø 2 to Ø 16	15
	7570	ER 32 HP Complete	from Ø 3 to Ø 20	18
	7571	ER 40 HP Complete	from Ø 4 to Ø 26	23
IN WOODEN CASE	7579	ER 8 HP Complete	from Ø 1 to Ø 5	9
	7580	ER 11 HP Complete	from Ø 1 to Ø 7	13
	7581	ER 16 HP Complete	from Ø 1 to Ø 10	10
	7582	ER 20 HP Complete	from Ø 2 to Ø 13	12
	7583	ER 25 HP Complete	from Ø 2 to Ø 16	15
	7584	ER 32 HP Complete	from Ø 3 to Ø 20	18
	7585	ER 40 HP Complete	from Ø 4 to Ø 26	23

ER COLLETS WITH COOLANT HOLES

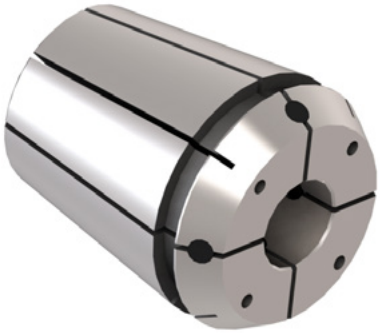

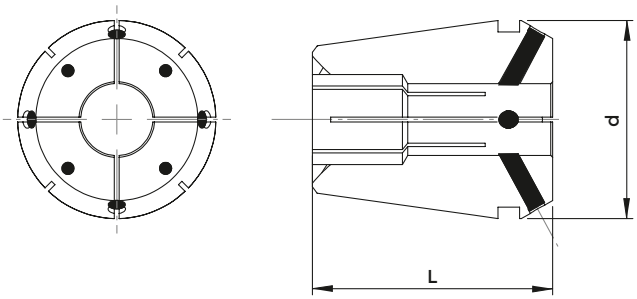

Coolant flows towards the edges of the tool through oriented holes. Working pressure: up to 40 Bar / 600 PSI

DIN 6499/A

COD.	DESCRIPTION	RANGE	d	L	STEP
0364 JE	ER 16 JET	3 ÷ 7	17	27,5	0,5
0787 JE	ER 20 JET	3 ÷ 9	21	31,5	0,5
0996 JE	ER 25 JET	3 ÷ 14	26	34	0,5
0988 JE	ER 32 JET	3 ÷ 20	33	40	0,5
0821 JE	ER 40 JET	4 ÷ 26	41	46	1
4055 JE	ER 50 JET	6 ÷ 34	52	60	1

REDUCED SET OF COLLETS ER-JET TYPE

	COD.	DESCRIPTION	DIAMETERS	N°OF COLLETS
IN PLASTIC TRAY	Serie ER25 JET	ER 25 JET Ridotta	Ø 4 - 6 - 8 -10 -12	5
	Serie ER32 JET	ER 32 JET Ridotta	Ø 4 - 6 - 8 -10 -12 -16 - 20	7
	Serie ER40 JET	ER 40 JET Ridotta	Ø 4 - 6 - 8 -10 -12 -16 - 20 - 25	8
IN WOODEN CASE	Serie ER25 JETWB	ER 25 JET Ridotta	Ø 4 - 6 - 8 -10 -12	5
	Serie ER32 JETWB	ER 32 JET Ridotta	Ø 4 - 6 - 8 -10 -12 -16 - 20	7
	Serie ER40 JETWB	ER 40 JET Ridotta	Ø 4 - 6 - 8 -10 -12 -16 - 20 - 25	8

COMPLETE SET OF COLLETS ER-JET TYPE

	COD.	DESCRIPTION	DIAMETERS	N°OF COLLETS
IN PLASTIC TRAY	Serie ER16 JETC	ER 16 JET Completa	da Ø 3 a Ø 7	5
	Serie ER20 JETC	ER 20 JET Completa	da Ø 3 a Ø 9	7
	Serie ER25 JETC	ER 25 JET Completa	da Ø 3 a Ø 14	12
	Serie ER32 JETC	ER 32 JET Completa	da Ø 3 a Ø 20	18
	Serie ER40 JETC	ER 40 JET Completa	da Ø 4 a Ø 26	23
IN WOODEN CASE	7650	ER 16 JET Completa	da Ø 3 a Ø 7	5
	7651	ER 20 JET Completa	da Ø 3 a Ø 9	7
	7652	ER 25 JET Completa	da Ø 3 a Ø 14	12
	7653	ER 32 JET Completa	da Ø 3 a Ø 20	18
	7654	ER 40 JET Completa	da Ø 4 a Ø 26	23

SEALED ER COLLETS

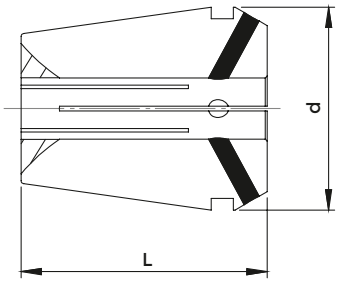

Coolant flows exclusively through central hole, collet cuts are sealed with neoprene inserts (above Ø 3). Working pressure: up to 40 Bar / 600 PSI

DIN 6499/A

COD.	DESCRIPTION	RANGE	d	L	STEP
5573 RF	ER 11 RF	1 ÷ 7	11,5	18	0,5
0364 RF	ER 16 RF	1 ÷ 10	17	27,5	0,5
0787 RF	ER 20 RF	2 ÷ 13	21	31,5	0,5
0996 RF	ER 25 RF	2 ÷ 16	26	34	0,5
0988 RF	ER 32 RF	3 ÷ 20	33	40	0,5
0821 RF	ER 40 RF	4 ÷ 26	41	46	1
4055 RF	ER 50 RF	6 ÷ 34	52	60	1

REDUCED SET OF COLLETS RF TYPE

	COD.	DESCRIPTION	DIAMETERS	N°OF COLLETS
IN PLASTIC TRAY	7587	ER 16 RF Reduced	Ø 4 - 6 - 8 -10	4
	7588	ER 20 RF Reduced	Ø 4 - 6 - 8 -10 -12	5
	7589	ER 25 RF Reduced	Ø 4 - 6 - 8 -10 -12 -16	6
	7590	ER 32 RF Reduced	Ø 4 - 6 - 8 -10 -12 -16 - 20	7
	7591	ER 40 RF Reduced	Ø 4 - 6 - 8 -10 -12 -16 - 20 - 25	8
IN WOODEN CASE	7600	ER 16 RF Reduced	Ø 4 - 6 - 8 -10	4
	7601	ER 20 RF Reduced	Ø 4 - 6 - 8 -10 -12	5
	7602	ER 25 RF Reduced	Ø 4 - 6 - 8 -10 -12 -16	6
	7603	ER 32 RF Reduced	Ø 4 - 6 - 8 -10 -12 -16 - 20	7
	7604	ER 40 RF Reduced	Ø 4 - 6 - 8 -10 -12 -16 - 20 - 25	8

COMPLETE SET OF COLLETS RF TYPE

	COD.	DESCRIPTION	DIAMETERS	N°OF COLLETS
IN PLASTIC TRAY	7593	ER 16 RF Complete	from Ø 3 to Ø 10	8
	7594	ER 20 RF Complete	from Ø 3 to Ø 13	11
	7595	ER 25 RF Complete	from Ø 3 to Ø 16	14
	7596	ER 32 RF Complete	from Ø 3 to Ø 20	18
	7597	ER 40 RF Complete	from Ø 4 to Ø 26	23
IN WOODEN CASE	7606	ER 16 RF Complete	from Ø 3 to Ø 10	8
	7607	ER 20 RF Complete	from Ø 3 to Ø 13	11
	7608	ER 25 RF Complete	from Ø 3 to Ø 16	14
	7609	ER 32 RF Complete	from Ø 3 to Ø 20	18
	7610	ER 40 RF Complete	from Ø 4 to Ø 26	23

ULTRA PRECISION SEALED ER COLLETS

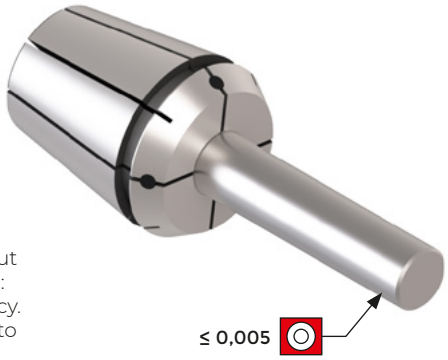

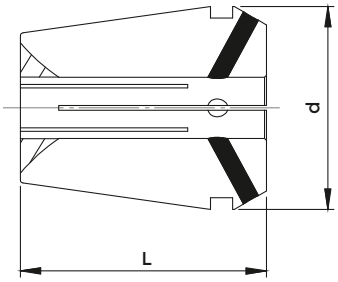

Collets with the same features of SSC type but with an ultra precision: ≤ 0,005 runout accuracy. Working pressure: up to 40 Bar / 600 PSI

DIN 6499/A

COD.	DESCRIPTION	RANGE	d	L	STEP
5573 UP	ER 11 RF - UP	1 ÷ 7	11,5	18	0,5
0364 UP	ER 16 RF - UP	1 ÷ 10	17	27,5	0,5
0787 UP	ER 20 RF - UP	2 ÷ 13	21	31,5	0,5
0996 UP	ER 25 RF - UP	2 ÷ 16	26	34	0,5
0988 UP	ER 32 RF - UP	3 ÷ 20	33	40	0,5
0821 UP	ER 40 RF - UP	4 ÷ 26	41	46	1
4055 UP	ER 50 RF - UP	6 ÷ 34	52	60	1

REDUCED SET OF COLLETS RF-UP TYPE

	COD.	DESCRIPTION	DIAMETERS	N°OF COLLETS
IN PLASTIC TRAY	7612	ER 16 UP Reduced	Ø 4 - 6 - 8 - 10	4
	7613	ER 20 UP Reduced	Ø 4 - 6 - 8 - 10 - 12	5
	7614	ER 25 UP Reduced	Ø 4 - 6 - 8 - 10 - 12 - 16	6
	7615	ER 32 UP Reduced	Ø 4 - 6 - 8 - 10 - 12 - 16 - 20	7
	7616	ER 40 UP Reduced	Ø 4 - 6 - 8 -10 - 12 - 16 - 20 - 25	8
IN WOODEN CASE	7624	ER 16 UP Reduced	Ø 4 - 6 - 8 - 10	4
	7625	ER 20 UP Reduced	Ø 4 - 6 - 8 - 10 - 12	5
	7626	ER 25 UP Reduced	Ø 4 - 6 - 8 - 10 - 12 - 16	6
	7627	ER 32 UP Reduced	Ø 4 - 6 - 8 - 10 - 12 - 16 - 20	7
	7628	ER 40 UP Reduced	Ø 4 - 6 - 8 -10 - 12 - 16 - 20 - 25	8

COMPLETE SET OF COLLETS RF-UP TYPE

	COD.	DESCRIPTION	DIAMETERS	N°OF COLLETS
IN PLASTIC TRAY	7618	ER 16 UP Complete	from Ø 3 to Ø 10	8
	7619	ER 20 UP Complete	from Ø 3 to Ø 13	11
	7620	ER 25 UP Complete	from Ø 3 to Ø 16	14
	7621	ER 32 UP Complete	from Ø 3 to Ø 20	18
	7622	ER 40 UP Complete	from Ø 4 to Ø 26	23
IN WOODEN CASE	7630	ER 16 UP Complete	from Ø 3 to Ø 10	8
	7631	ER 20 UP Complete	from Ø 3 to Ø 13	11
	7632	ER 25 UP Complete	from Ø 3 to Ø 16	14
	7633	ER 32 UP Complete	from Ø 3 to Ø 20	18
	7634	ER 40 UP Complete	from Ø 4 to Ø 26	23

STEEL SEALED ER COLLETS FOR HIGH PRESSURES

The coolant is channeled exclusively in the central hole thanks to the mechanical seal guaranteed by the cuts conformation. Working pressure: up to 130 BAR / 1900 PSI

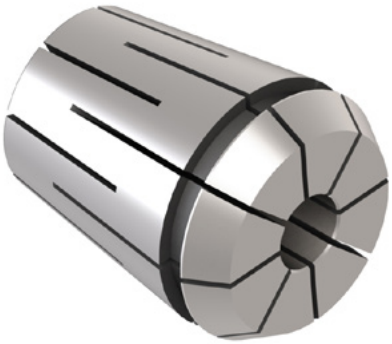

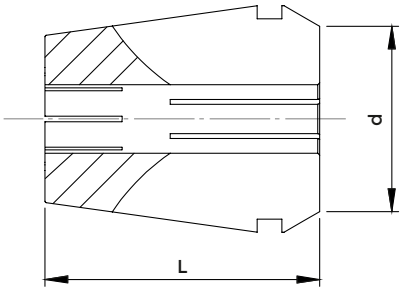

DIN 6499/A

COD.	DESCRIPTION	RANGE	d	L	STEP
5573 SC	ER 11 SSC	3 ÷ 7 OVERSIZE 7,5 ÷ 8	11,5	18,0 OVERSIZE → 15,0	0,5
ERC16D...	ER 16 SSC	3 ÷ 10 OVERSIZE 10,5 ÷ 12	17	27,5 OVERSIZE → 21,5	0,5
ERC20D...	ER 20 SSC	3 ÷ 13 OVERSIZE 13,5 ÷ 15	21	31,5 OVERSIZE → 26,5	0,5
ERC25D...	ER 25 SSC	3 ÷ 16 OVERSIZE 16,5 ÷ 20	26	34,0 OVERSIZE → 28,0	0,5
ERC32D...	ER 32 SSC	3 ÷ 20 OVERSIZE 20,5 ÷ 25	33	40,0 OVERSIZE → 34,0	0,5
ERC40D...	ER 40 SSC	3 ÷ 30 OVERSIZE 31 ÷ 32	41	46,0 OVERSIZE → 39,5	1

REDUCED SET OF COLLETS ER-SSC TYPE

	COD.	DESCRIPTION	DIAMETERS	N°OF COLLETS
IN PLASTIC TRAY	7670	ER 16 SSC Reduced	Ø 4 - 6 - 8 - 10	4
	7671	ER 20 SSC Reduced	Ø 4 - 6 - 8 - 10 - 12	5
	7672	ER 25 SSC Reduced	Ø 4 - 6 - 8 - 10 - 12 - 16	6
	7673	ER 32 SSC Reduced	Ø 4 - 6 - 8 - 10 - 12 - 16 - 20	7
	7674	ER 40 SSC Reduced	Ø 4 - 6 - 8 - 10 - 12 - 16 - 20 - 25	8
IN WOODEN CASE	7690	ER 16 SSC Reduced	Ø 4 - 6 - 8 - 10	4
	7691	ER 20 SSC Reduced	Ø 4 - 6 - 8 - 10 - 12	5
	7692	ER 25 SSC Reduced	Ø 4 - 6 - 8 - 10 - 12 - 16	6
	7693	ER 32 SSC Reduced	Ø 4 - 6 - 8 - 10 - 12 - 16 - 20	7
	7694	ER 40 SSC Reduced	Ø 4 - 6 - 8 - 10 - 12 - 16 - 20 - 25	8

COMPLETE SET OF COLLETS ER-SSC TYPE

	COD.	DESCRIPTION	DIAMETERS	N°OF COLLETS
IN PLASTIC TRAY	7675	ER 16 SSC Complete	from Ø 3 to Ø 10	8
	7676	ER 20 SSC Complete	from Ø 3 to Ø 13	11
	7677	ER 25 SSC Complete	from Ø 3 to Ø 16	14
	7678	ER 32 SSC Complete	from Ø 3 to Ø 20	18
	7679	ER 40 SSC Complete	from Ø 4 to Ø 26	23
IN WOODEN CASE	7695	ER 16 SSC Complete	from Ø 3 to Ø 10	8
	7696	ER 20 SSC Complete	from Ø 3 to Ø 13	11
	7697	ER 25 SSC Complete	from Ø 3 to Ø 16	14
	7698	ER 32 SSC Complete	from Ø 3 to Ø 20	18
	7699	ER 40 SSC Complete	from Ø 4 to Ø 26	23

HIGH PRECISION STEEL SEALED ER COLLETS FOR HIGH PRESSURES

Collets with the same cooling mechanical seal features of SSC type, but with an high precision: ≤ 0,005 mm runout accurancy. Working pressure: up to 130 Bar / 1900 PSI.

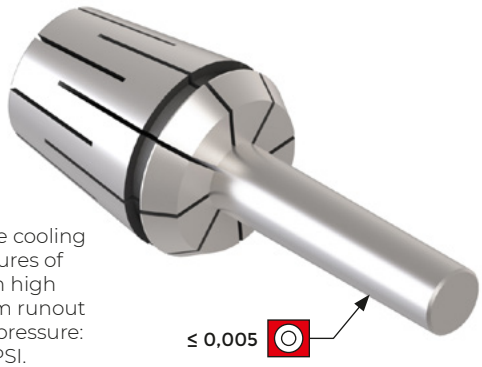

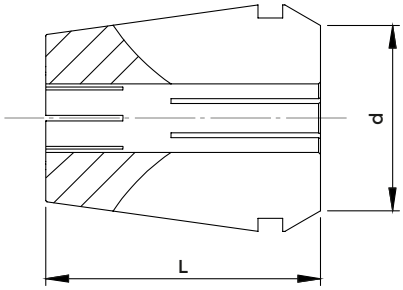

DIN 6499/A

COD.	DESCRIPTION	RANGE	d	L
5573 SH	ER 11 SSC - HP	3 ÷ 7 OVERSIZE 7,5 ÷ 8	11,5	18,0 OVERSIZE → 15,0
0364 SH	ER 16 SSC - HP	3 ÷ 10 OVERSIZE 10,5 ÷ 12	17	27,5 OVERSIZE → 21,5
0787 SH	ER 20 SSC - HP	3 ÷ 13 OVERSIZE 13,5 ÷ 15	21	31,5 OVERSIZE → 26,5
0996 SH	ER 25 SSC - HP	3 ÷ 16 OVERSIZE 16,5 ÷ 20	26	34,0 OVERSIZE → 28,0
0988 SH	ER 32 SSC - HP	3 ÷ 20 OVERSIZE 20,5 ÷ 25	33	40,0 OVERSIZE → 34,0
0821 SH	ER 40 SSC - HP	3 ÷ 30 OVERSIZE 31 ÷ 32	41	46,0 OVERSIZE → 39,5

REDUCED SET OF COLLETS SSC - HP TYPE

	COD.	DESCRIPTION	DIAMETERS	N°OF COLLETS
IN PLASTIC TRAY	7360	ER 16 SH Reduced	Ø 4 - 6 - 8 - 10	4
	7361	ER 20 SH Reduced	Ø 4 - 6 - 8 - 10 - 12	5
	7362	ER 25 SH Reduced	Ø 4 - 6 - 8 - 10 - 12 - 16	6
	7363	ER 32 SH Reduced	Ø 4 - 6 - 8 - 10 - 12 - 16 - 20	7
	7364	ER 40 SH Reduced	Ø 4 - 6 - 8 - 10 - 12 - 16 - 20 - 25	8
IN WOODEN CASE	7370	ER 16 SH Reduced	Ø 4 - 6 - 8 - 10	4
	7371	ER 20 SH Reduced	Ø 4 - 6 - 8 - 10 - 12	5
	7372	ER 25 SH Reduced	Ø 4 - 6 - 8 - 10 - 12 - 16	6
	7373	ER 32 SH Reduced	Ø 4 - 6 - 8 - 10 - 12 - 16 - 20	7
	7374	ER 40 SH Reduced	Ø 4 - 6 - 8 - 10 - 12 - 16 - 20 - 25	8

COMPLETE SET OF COLLETS SSC - HP TYPE

	COD.	DESCRIPTION	DIAMETERS	N°OF COLLETS
IN PLASTIC TRAY	7365	ER 16 SH Complete	from Ø 3 to Ø 10	8
	7366	ER 20 SH Complete	from Ø 3 to Ø 13	11
	7367	ER 25 SH Complete	from Ø 3 to Ø 16	14
	7368	ER 32 SH Complete	from Ø 3 to Ø 20	18
	7369	ER 40 SH Complete	from Ø 4 to Ø 26	23
IN WOODEN CASE	7375	ER 16 SH Complete	from Ø 3 to Ø 10	8
	7376	ER 20 SH Complete	from Ø 3 to Ø 13	11
	7377	ER 25 SH Complete	from Ø 3 to Ø 16	14
	7378	ER 32 SH Complete	from Ø 3 to Ø 20	18
	7379	ER 40 SH Complete	from Ø 4 to Ø 26	23

ER COLLETS WITH SQUARE FOR TAPPING

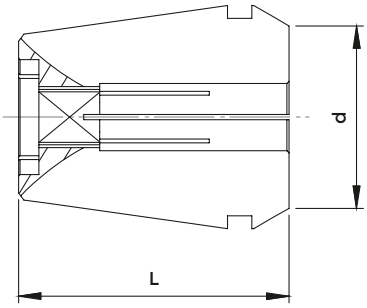

The drag square for the tapping tool is made on the bottom of the collet.

DIN 6499/A

COD.	DESCRIPTION	RANGE	d	L
5573 MF	ER 11 MF - con Quadro	Ø 3,5 ÷ Ø 6,0	11,5	18
0364 MF	ER 16 MF - con Quadro	Ø 3,5 ÷ Ø 8,0	17	27,5
0787 MF	ER 20 MF - con Quadro	Ø 3,5 ÷ Ø 10,0	21	31,5
0996 MF	ER 25 MF - con Quadro	Ø 3,5 ÷ Ø 12,0	26	34
0988 MF	ER 32 MF - con Quadro	Ø 3,5 ÷ Ø 16,0	33	40
0821 MF	ER 40 MF - con Quadro	Ø 4,5 ÷ Ø 20,0	41	46
4055 MF	ER 50 MF - con Quadro	Ø 8,0 ÷ Ø 32,0	52	60

REDUCED SET OF COLLETS ER-MF TYPE

	COD.	DESCRIPTION	DIAMETERS	N°OF COLLETS
IN PLASTIC TRAY	7655	ER 16 MF Reduced	Ø 3,5 - 4,5 - 6 - 7	4
	7656	ER 20 MF Reduced	Ø 3,5 - 4,5 - 6 - 7 - 8 - 9 - 10	7
	7657	ER 25 MF Reduced	Ø 3,5 - 4,5 - 6 - 7 - 8 - 9 - 10 - 11 - 12	9
	7658	ER 32 MF Reduced	Ø 4,5 - 6 - 7 - 8 - 9 - 10 - 11 - 12 - 14 - 16	10
	7659	ER 40 MF Reduced	Ø 6 - 7 - 8 - 9 - 10 - 11 - 12 - 14 - 16 - 18 - 20	11
IN WOODEN CASE	7660	ER 16 MF Reduced	Ø 3,5 - 4,5 - 6 - 7	4
	7661	ER 20 MF Reduced	Ø 3,5 - 4,5 - 6 - 7 - 8 - 9 - 10	7
	7662	ER 25 MF Reduced	Ø 3,5 - 4,5 - 6 - 7 - 8 - 9 - 10 - 11 - 12	9
	7663	ER 32 MF Reduced	Ø 4,5 - 6 - 7 - 8 - 9 - 10 - 11 - 12 - 14 - 16	10
	7664	ER 40 MF Reduced	Ø 6 - 7 - 8 - 9 - 10 - 11 - 12 - 14 - 16 - 18 - 20	11

ER COLLETS WITH SQUARE FOR TAPPING

The drag square for the tapping tool is made on the bottom of the collet. Coolant flows exclusively through central hole, collet cuts are sealed with neoprene inserts.
Working pressure:
up to 40 Bar / 600 PSI

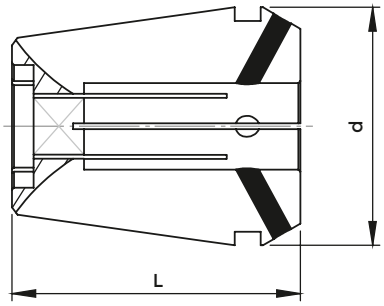

DIN 6499/A

COD.	DESCRIPTION	RANGE	d	L
5573 ML	ER 11 ML - con Quadro	Ø 3,5 ÷ Ø 6,0	11,5	18
0364 ML	ER 16 ML - con Quadro	Ø 3,5 ÷ Ø 8,0	17	27,5
0787 ML	ER 20 ML - con Quadro	Ø 3,5 ÷ Ø 10,0	21	31,5
0996 ML	ER 25 ML - con Quadro	Ø 3,5 ÷ Ø 12,0	26	34
0988 ML	ER 32 ML - con Quadro	Ø 3,5 ÷ Ø 16,0	33	40
0821 ML	ER 40 ML - con Quadro	Ø 4,5 ÷ Ø 20,0	41	46
4055 ML	ER 50 ML - con Quadro	Ø 8,0 ÷ Ø 32,0	52	60

REDUCED SET OF COLLETS ER-ML TYPE

	COD.	DESCRIPTION	DIAMETERS	N°OF COLLETS
IN PLASTIC TRAY	7756	ER 16 ML Reduced	Ø 3,5 - 4,5 - 6 - 7	4
	7757	ER 20 ML Reduced	Ø 3,5 - 4,5 - 6 - 7 - 8 - 9 - 10	7
	7758	ER 25 ML Reduced	Ø 3,5 - 4,5 - 6 - 7 - 8 - 9 - 10 - 11 - 12	9
	7759	ER 32 ML Reduced	Ø 4,5 - 6 - 7 - 8 - 9 - 10 - 11 - 12 - 14 - 16	10
	7760	ER 40 ML Reduced	Ø 6 - 7 - 8 - 9 - 10 - 11 - 12 - 14 - 16 - 18 - 20	11
IN WOODEN CASE	7761	ER 16 ML Reduced	Ø 3,5 - 4,5 - 6 - 7	4
	7762	ER 20 ML Reduced	Ø 3,5 - 4,5 - 6 - 7 - 8 - 9 - 10	7
	7763	ER 25 ML Reduced	Ø 3,5 - 4,5 - 6 - 7 - 8 - 9 - 10 - 11 - 12	9
	7764	ER 32 ML Reduced	Ø 4,5 - 6 - 7 - 8 - 9 - 10 - 11 - 12 - 14 - 16	10
	7765	ER 40 ML Reduced	Ø 6 - 7 - 8 - 9 - 10 - 11 - 12 - 14 - 16 - 18 - 20	11

ER COLLETS – TENSION ADJUSTMENT

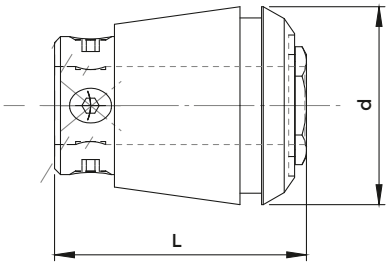

Tapping tool is clamped by the screws placed on the mobile part.

DIN 6499

COD.	DESCRIPTION	RANGE	d	L	T	STOP RING
						C
0364 AM	ER 16 - Compensate	Ø 2,0 ÷ Ø 6,0	17	27	7	9395
0787 AM	ER 20 - Compensate	Ø 2,5 ÷ Ø 7,0	21	31	7	9396
0996 AM	ER 25 - Compensate	Ø 2,5 ÷ Ø 10,0	26	34	8	9397
0988 AM	ER 32 - Compensate	Ø 4,5 ÷ Ø 12,5	33	43	10	9398
0821 AM	ER 40 - Compensate	Ø 6,0 ÷ Ø 16,0	41	54	13	9399

REDUCED SET OF ER-AM COLLETS

	COD.	DESCRIPTION	DIAMETERS	N°OF COLLETS
IN WOODEN CASE	7741	ER 16 AM Reduced	Ø 2,5 - 2,8 - 3,5 - 4,5 - 6	5
	7742	ER 20 AM Reduced	Ø 2,5 - 2,8 - 3,5 - 4,5 - 6 - 7	6
	7743	ER 25 AM Reduced	Ø 3,5 - 4,5 - 6 - 7 - 8 - 9 - 10	7
	7744	ER 32 AM Reduced	Ø 4,5 - 6 - 7 - 8 - 9 - 10 - 11 - 12	8
	7745 *	ER 40 AM Reduced	Ø 6 - 7 - 8 - 9 - 10 - 11 - 12 - 14 - 16	9

*Supplied into plastic case code 7024

SHANKS DIMENSIONS FOR METRIC TAPPING TOOLS

SHANK Ø x	STANDARD DIN 352	REINFORCED DIN 371	STANDARD DIN 376	STANDARD ISO	REINFORCED ISO
2,50 x 2,10	M 1,0 ÷ M 1,8	M 1,0 ÷ M 1,8	M 3,5	-	-
2,80 x 2,10	M 2,0 ÷ M 2,5	M 2,0 ÷ M 2,5	M 4,0	-	-
3,15 x 2,50	-	-	-	M 4,0	M 3,0
3,50 x 2,70	M 3,0	M 3,0	M 5,0	-	-
3,55 x 2,80	-	-	-	M 4,5	M 3,5
4,00 x 3,15	M 3,5	M 3,5	-	M 5,0	M 4,0
4,50 x 3,40	M 4,0	M 4,0	M 6,0	-	
5,00 x 4,00	-	-	-	-	M 5,0
5,50 x 4,30	-	-	M 7,0	-	-
5,60 x 4,50	-	-	-	M 7,0	-
6,00 x 4,90	M 5,0 - M 6,0 - M 8,0	M 5,0 - M 6,0	M 8,0		-
6,30 x 5,00	-	-	-	M 8,0	M 6,0
7,00 x 5,50	M 10,0		M 10,0	-	-
7,10 x 5,60	-	-	-	M 9,0	-
8,00 x 6,20	-	M 8,0	-	M 10,0	M 8,0
9,00 x 7,00	M 12,0	-	M 12,0	M 12,0	-
10,00 x 8,00	-	M 10,0		-	M 10,0
11,00 x 9,00	M 14,0	-	M 14,0	-	-
11,20 x 9,00	-	-	-	M 14,0	-
12,00 x 9,00	M 16,0	-	M 16,0	-	-
12,50 x 10,00	-	-	-	M 16,0	-
14,00 x 11,00	M 18,0	-	M 18,0	-	-
16,00 x 12,00	M 20,0	-	M 20,0	-	-
18,00 x 14,50	M 22,0 - M 24,0	-	M 22,0 - M 24,0	-	-
20,00 x 16,00	M 27,0	-	M 27,0	M 27,0 - M 30,0	-
22,00 x 18,00	M 30,0	-	M 30,0	-	-
25,00 x 20,00	M 33,0	-	M 33,0	M 36,0	-
28,00 x 22,00	M 36,0	-	M 36,0	-	-
32,00 x 24,00	M 39,0 - M 42,0	-	M 39,0 - M 42,0	-	-

ER NUTS INNER THREADS

NUT	ER 8	ER 11	ER 16	ER 20	ER 25	ER 32	ER 40	ER 50	ER 60	ER 90
MINI	10 x 0,75	13 x 0,75	19 x 1,0	24 x 1,0	30 x 1,0	-	-	-	-	-
HEXAGONAL	-	14 x 0,75	22 x 1,5	25 x 1,5	-	-	-	-	-	-
STANDARD	-	-	22 x 1,5	25 x 1,5	32 x 1,5	40 x 1,5	50 x 1,5	64 x 2,0	70 x 1,5	110 x 1,5

ASSEMBLING OF COLLETS IN ER NUTS

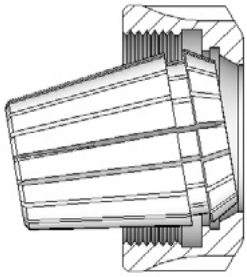

Fig. 1

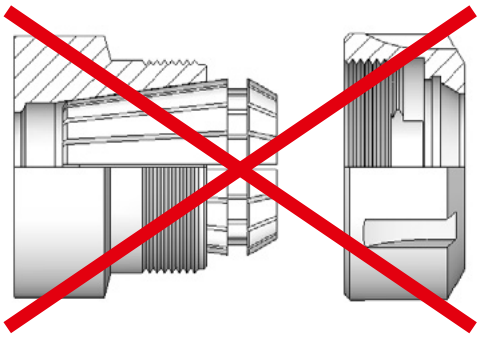

Fig. 2

RIGHT PROCEDURE TO ASSEMBLE THE COLLET IN THE NUT

A) Insert the collet into the nut inclining it untill the collet groove matches with nut excentric seat (picture 1).

B) Once the collet has been mounted in the nut (point A), screw the assembly on the spindle.

C) After insert the tool into the collet, is suggested to use the suitable wrench to complete the tightening.

WRONG PROCEDURE TO ASSEMBLE THE COLLET IN THE NUT

D) Inserting the collet into the spindle seat without first assembling it with the nut (picture 2) irremediably compromises the whole integrity :

- excentric in the nut breaks because of the pressure made by the collet. Such a breakage will not permit anymore the extraction of the collet that then will stay locked in its seat.
- during the nut screwing, broken excentric residuals cause scrapeson conic grindedpart of the collet compromising the exact matching.

ER CLAMPING NUTS MINI TYPE

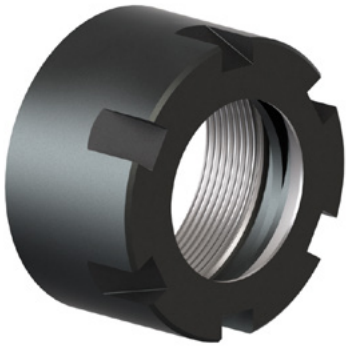

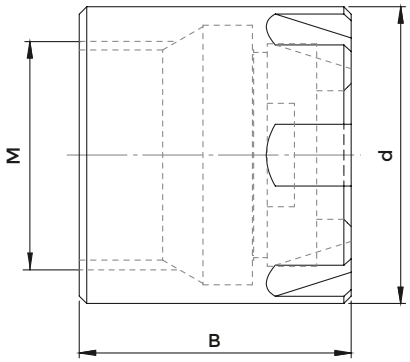

DIN 6499

RIGHT THREAD

COD.	DESCRIPTION	d	B	M	COLLET	WRENCH
0373	GM 8	12	11	10 x 0,75	ER8	816-203007
0432	GM 11	16	12	13 x 0,75	ER11	816-203008
1229	GM 16	22	18	19 x 1,00	ER16	816-203009
1230	GM 20	28	19	24 x 1,00	ER20	816-203010
1231	GM 25	35	20	30 x 1,00	ER25	816-203011

LEFT THREAD

COD.	DESCRIPTION	d	B	M	COLLET	WRENCH
1188	GM 8 L	12	10	10 x 0,75 SX	ER8	816-203007
1189	GM 11 L	16	12	13 x 0,75 SX	ER11	816-203008
1233	GM 16 L	22	18	19 x 1,00 SX	ER16	816-203009
1234	GM 20 L	28	19	24 x 1,00 SX	ER20	816-203010
1235	GM 25 L	35	20	30 x 1,00 SX	ER25	816-203011

ER CLAMPING NUTS MINI TYPE

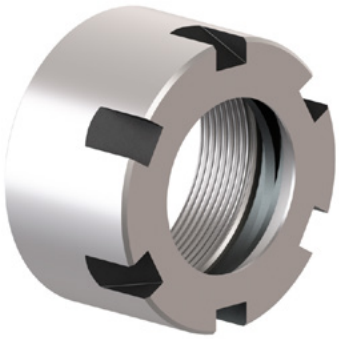

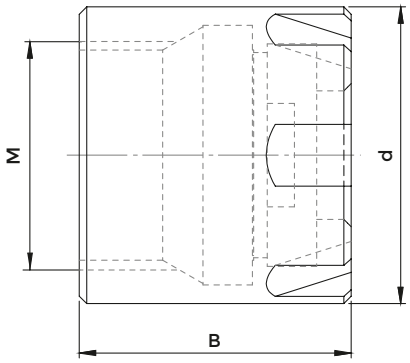

DIN 6499

GROUND OUTSIDE - RIGHT THREAD

COD.	DESCRIPTION	d	B	M	COLLET	WRENCH
812-203011	GM 8 W	12	10	10 x 0,75	ER8	816-203007
812-203012	GM 11 W	16	12	13 x 0,75	ER11	816-203008
812-203013	GM 16 W	22	18	19 x 1,00	ER16	816-203009
812-203014	GM 20 W	28	19	24 x 1,00	ER20	816-203010
812-203015	GM 25 W	35	20	30 x 1,00	ER25	816-203011

ER CLAMPING NUTS HEXAGONAL TYPE

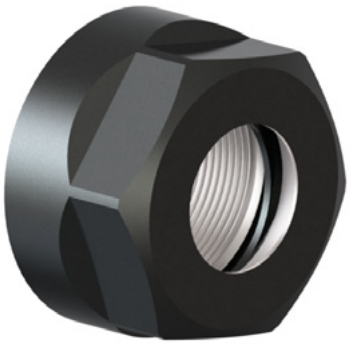

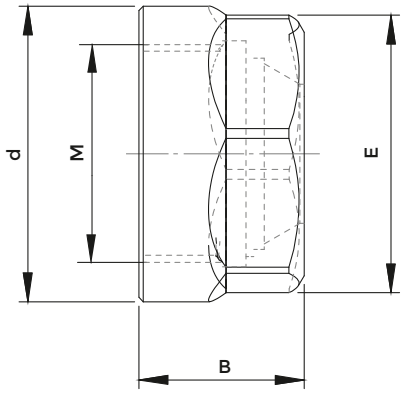

DIN 6499

RIGHT THREAD

COD.	DESCRIPTION	d	E	B	M	COLLET	WRENCH
812-203008	GE 11	19	17	11,3	14 x 0,75	ER11	2905
0342	GE 12	19	17	14	14 x 0,75	ER12	2905
812-203009	GE 16	28	25	17,5	22 x 1,50	ER16	816-203012
812-203010	GE 20	34	30	19	25 x 1,50	ER20	816-203013

ER CLAMPING NUTS STANDARD TYPE

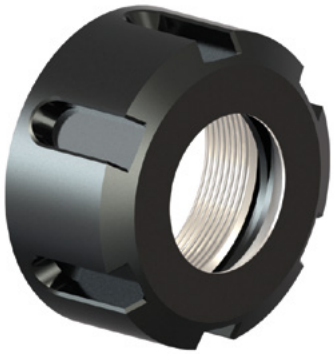

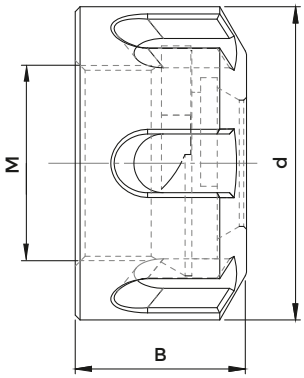

DIN 6499

RIGHT THREAD

COD.	DESCRIPTION	d	B	M	COLLET	WRENCH
812-203005	GS 16	32	17,5	22 x 1,5	ER16	816-203000
812-203006	GS 20	35	19	25 x 1,5	ER20	816-203005
812-203001	GS 25	42	20	32 x 1,5	ER25	816-203001
812-203002	GS 32	50	22,5	40 x 1,5	ER32	816-203002
812-203003	GS 40	63	25,5	50 x 1,5	ER40	816-203003
812-203007	GS 50	78	35,5	64 x 2,0	ER50	816-203004

LEFT THREAD

COD.	DESCRIPTION	d	B	M	COLLET	WRENCH
812-203000	GS 16 L	32	17,5	22 x 1,5 SX	ER16	816-203000
3072	GS 20 L	35	19	25 x 1,5 SX	ER20	816-203005
812-203033	GS 25 L	42	20	32 x 1,5 SX	ER25	816-203001
812-203035	GS 32 L	50	22,5	40 x 1,5 SX	ER32	816-203002
812-203034	GS 40 L	63	25,5	50 x 1,5 SX	ER40	816-203003

ER CLAMPING NUTS STANDARD TYPE

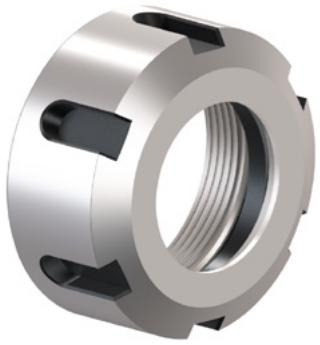

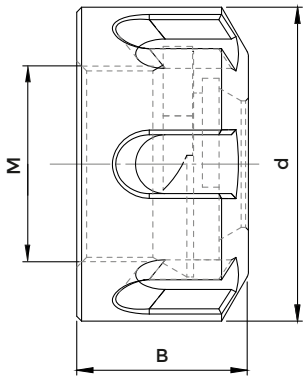

DIN 6499

GROUND OUTSIDE - RIGHT THREAD

COD.	DESCRIPTION	d	B	M	COLLET	WRENCH
812-203080	GS 16 W	32	17,5	22 x 1,5	ER16	816-203000
812-203081	GS 20 W	35	19	25 x 1,5	ER20	816-203005
812-203082	GS 25 W	42	20	32 x 1,5	ER25	816-203001
812-203083	GS 32 W	50	22,5	40 x 1,5	ER32	816-203002
812-203084	GS 40 W	63	25,5	50 x 1,5	ER40	816-203003

ER HIGH PRECISION CLAMPING NUTS TYPE

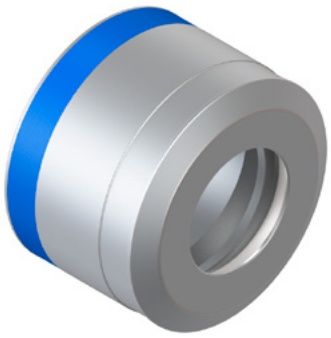

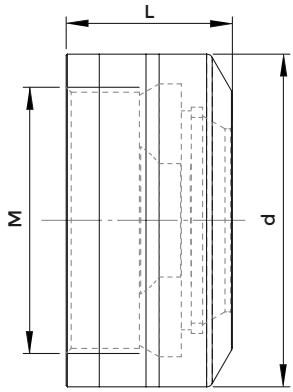

COD.	d	L	ER	RANGE	M
812-203085	30	19,5	16	1÷12	22X1,5
812-203086	40	22	25	1÷20	32X1,5
812-203087	50	25	32	1÷25	40X1,5

ER CLAMPING NUTS STANDARD TYPE - BALL BEARING EXECUTION

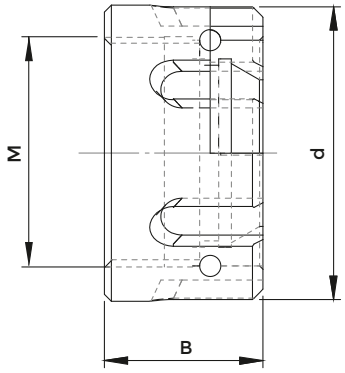

DIN 6499

RIGHT THREAD

COD.	DESCRIPTION	d	B	M	COLLET	WRENCH
2713	GS 16 B	32	20	22 x 1,5	ER16	816-203000
2714	GS 20 B	35	22	25 x 1,5	ER20	816-203005
2715	GS 25 B	42	22,5	32 x 1,5	ER25	816-203001
2716	GS 32 B	50	25	40 x 1,5	ER32	816-203002
2717	GS 40 B	63	28	50 x 1,5	ER40	816-203003
2913	GS 50 B	78	40	64 x 2,0	ER50	816-203004
5714	GS 60 B	83	36	70 x 1,5	ER60	-

CHARACTERISTICS AND ADVANTAGES

- Collet clamping force is increased.
- Avoids collet torsion reducing friction with its seat and consequently preserves its accuracy.
- Interchangeable with standard and hexagonal nuts.

ER CLAMPING NUTS WITH OUTSIDE THREAD - "GA" TYPE

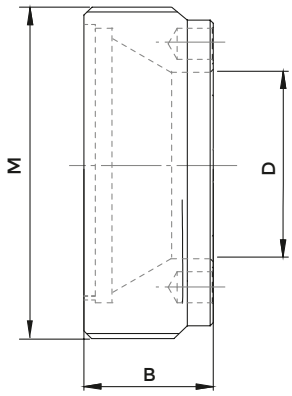

DIN 6499

COD.	DESCRIPTION	B	M	D	COLLET	WRENCH
2867	GA 11	6,0	18 x 1,0	9	ER11	CH-3169
2868	GA 16	8,0	24 x 1,0	12,8	ER16	CHER16EX
2869	GA 20	11,0	28 x 1,5	16	ER20	3171
812-203057	GA 25	12,5	32 x 1,5	18	ER25	CHER25EX
812-203032	GA 32	14,00	40 x 1,5	25,5	ER32	CHER32EX

WRENCHES FOR "GA" TYPE CLAMPING NUTS

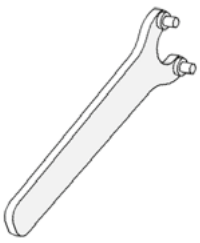

COD.	DESCRIPTION	NUT
CH-3169	CH ER 11 GA	2867
CHER16EX	CH ER 16 GA	2868
3171	CH ER 20 GA	2869
CHER25EX	CH ER 25 GA	812-203057
CHER32EX	CH ER 32 GA	812-203032

ER CLAMPING NUTS "GA-E" TYPE WITH OUTSIDE THREAD - HEXAGONAL HOLD

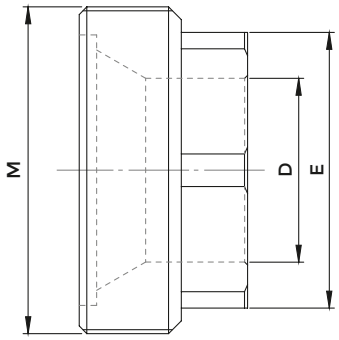

DIN 6499

COD.	DESCRIPTION	E	B	M	D	COLLET	WRENCH
2601	GA 11 E	13	10	18 x 1,0	9	ER11	5491
2606	GA 16 E	19	11	24 x 1,0	12,8	ER16	5492
2610	GA 20 E	22	14	28 x 1,5	16	ER20	5493
2611	GA 25 E	27	14	32 x 1,5	20,5	ER25	5494
2612	GA 32 E	32	17,5	40 x 1,5	25,5	ER32	5495
2613	GA 40 E	42	17,1	50 x 1,5	34	ER40	5496

WRENCHES FOR "GA-E" TYPE CLAMPING NUTS

COD.	DESCRIPTION	NUT
5491	CH ER 11 GA-E	2601
5492	CH ER 16 GA-E	2606
5493	CH ER 20 GA-E	2610
5494	CH ER 25 GA-E	2611
5495	CH ER 32 GA-E	2612
5496	CH ER 40 GA-E	2613

ER WRENCHES FOR MINI CLAMPING NUTS

DIN 6499

COD.	DESCRIPTION	Ø	NUT
816-203007	CH 8 Mini	12	0373
816-203008	CH 11 Mini	16	0432
816-203009	CH 16 Mini	22	1229
816-203010	CH 20 Mini	28	1230
816-203011	CH 25 Mini	35	1231

ER WRENCHES FOR EXAGONAL CLAMPING NUTS

DIN 6499

COD.	DESCRIPTION	E	NUT
2905	CH 11 CE	17	812-203008
2905	CH 12 CE	17	0342
816-203012	CH 16 CE	25	812-203009
816-203013	CH 20 CE	30	812-203010

ER WRENCHES FOR STANDARD CLAMPING NUTS

DIN 6499

COD.	DESCRIPTION	Ø	NUT
816-203000	CH 16 ST	32	812-203005
816-203005	CH 20 ST	35	812-203006
816-203001	CH 25 ST	42	812-203001
816-203002	CH 32 ST	50	812-203002
816-203003	CH 40 ST	63	812-203003
816-203004	CH 50 ST	78	812-203007

ER WRENCHES HIGH PRECISION CLAMPING NUTS

DIN 6499

COD.	d	ER	RANGE
816-203069	30	16	1÷12
816-203070	40	25	1÷20
816-203071	50	32	1÷25

*suitable for ER/ERHP/ERC collets

ER WRENCHES FOR SIDE GRIP CLAMPING NUTS

DIN 6499

COD.	DESCRIPTION	Ø	NUT
G2880	CH ER 11 GT - CH 6 GOC	20	5090
2820	CH 8 GOC	26	GOC8
816-203031	CH ER 16 GT - CH 10 GOC	32	812-203069
816-203035	CH ER 20 GT- CH 12 GOC	35	5092
816-203032	CH ER 25 GT- CH 16 GOC	42	812-203070
816-203033	CH ER 32 GT- CH 20 GOC	50	812-203071
816-203034	CH ER 40 GT- CH 25 GOC	63	812-203072
816-203036	CH EOC 32 PC CH 32 GOC	72	GOC32
2836	CH 40 GOC	85	GOC40

ER TORQUE WRENCHES FOR MINI CLAMPING NUTS

DIN 6499

COD.	DESCRIPTION	TORQUE	Ø	NUT
			Ø	
9786	CD 8 Mini	8 Nm	12	0373
9787	CD 11 Mini	18 Nm	16	0432
9788	CD 16 Mini	28 Nm	22	1229
9789	CD 20 Mini	35 Nm	28	1230
9790	CD 25 Mini	40 Nm	35	1231

ER TORQUE WRENCHES FOR HEXAGONAL CLAMPING NUTS

DIN 6499

COD.	DESCRIPTION	TORQUE		E	NUT
				E	
9791	CD 11 CE	20 Nm		17	812-203008
9791	CD 12 CE	20 Nm		17	0342
9792	CD 16 CE	30 Nm	50 Nm	25	812-203009
9793	CD 20 CE	40 Nm	70 Nm	30	812-203010

ER TORQUE WRENCHES FOR STANDARD CLAMPING NUTS

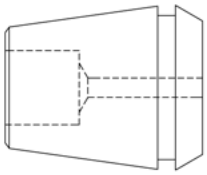

For wrought collets, select MINIMUM Torque

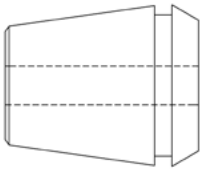

For normal collets, select MAXIMUM Torque

DIN 6499

COD.	DESCRIPTION	TORQUE		Ø	NUT
				- Ø -	
9794	CD 16 ST	30 Nm	50 Nm	32	812-203005
9795	CD 20 ST	40 Nm	70 Nm	35	812-203006
9796	CD 25 ST	55 Nm	90 Nm	42	812-203001
9797	CD 32 ST	70 Nm	130 Nm	50	812-203002
9798	CD 40 ST	120 Nm	200 Nm	63	812-203003

DIN 69872 PULL STUDS WITHOUT COOLANT BORE (ISO 7388-3 form AD - AF)

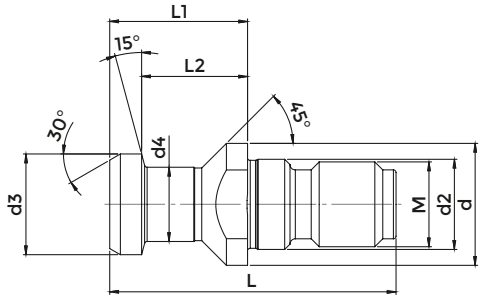

DIN 69872

COD. (WITHOUT OR)	COD. (WITH OR)	DESCRIPTION	M	d	d2	d3	d4	L	L1	L2
217-21206	-	69872 ISO 30 - NON FORATO	M 12	17	13	13	9	44	24	19
217-21207	217-21301	69872 ISO 40 - NON FORATO	M 16	23	17	19	14	54	26	20
217-22380	-	69872 ISO 45 - NON FORATO	M 20	30	21	23	17	65	30	23
217-21208	217-21302	69872 ISO 50 - NON FORATO	M 24	36	25	28	21	74	34	25

DIN 69872 PULL STUDS WITH COOLANT BORE (ISO 7388-3 form AD - AF)

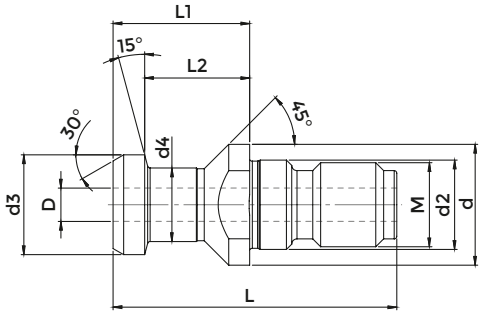

DIN 69872

COD. (WITHOUT OR)	COD. (WITH OR)	DESCRIPTION	M	d	d2	d3	d4	L	L1	L2	D
217-21203	-	69872 ISO 30 - FORATO	M 12	17	13	13	9	44	24	19	3
217-21201	217-21305	69872 ISO 40 - FORATO	M16	23	17	19	14	54	26	20	7
-	611-2033-02	69872 ISO 40 - OKUMA	M 16	23	17	19	14	54	26	20	4
217-22371	-	69872 ISO 45 - FORATO	M 20	30	21	23	17	65	30	23	9,5
217-21202	217-21306	69872 ISO 50 - FORATO	M 24	36	25	28	21	74	34	25	11,5

DIN 69872 PULL STUDS WITH COOLANT BORE AND DOUBLE O-RING (ISO 7388-3 form AD - AF)

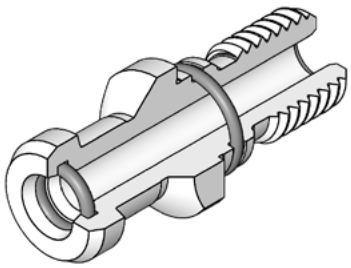

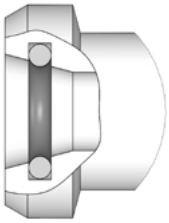

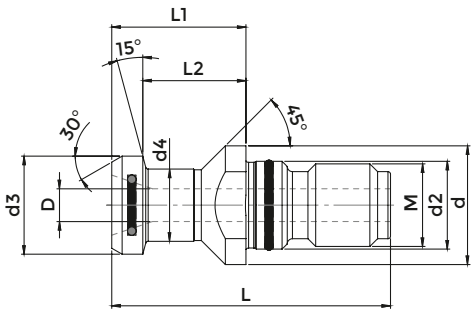

DIN 69872

COD.	DESCRIPTION	M	d	d2	d3	d4	L	L1	L2	D
217-21307	69872 ISO 40 - FORATO con DOPPIO OR	M 16	23	17	19	14	54	26	20	7
217-21309	69872 ISO 50 - FORATO con DOPPIO OR	M 24	36	25	28	21	74	34	25	11,5

DIN 69872 TYPE PULL STUDS SUITABLE FOR BT SHANKS WITHOUT COOLANT BORE

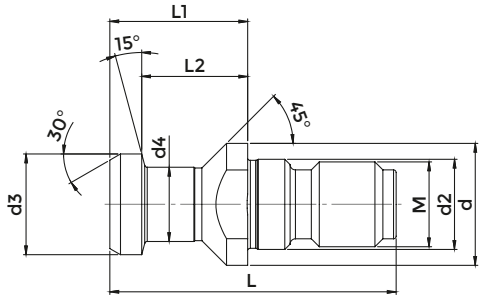

DIN 69872

COD. (WITHOUT OR)	COD. (WITH OR)	DESCRIPTION	M	d	d2	d3	d4	L	L1	L2
217-22364	217-22365	69872 / BT 40 - NON FORATO	M16	23	17	19	14	54	29	23

DIN 69872 TYPE PULL STUDS SUITABLE FOR BT SHANKS WITH COOLANT BORE

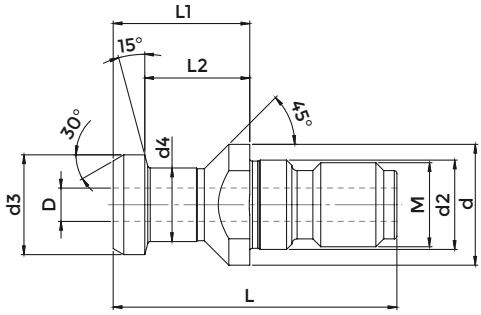

DIN 69872

COD. (WITHOUT OR)	COD. (WITH OR)	DESCRIPTION	M	d	d2	d3	d4	L	L1	L2	D
217-22366	217-22367	69872 / BT 40 - FORATO	M16	23	17	19	14	54	29	23	7

DIN 69872 TYPE PULL STUDS SUITABLE FOR BT SHANKS WITH COOLANT BORE AND DOUBLE O-RING

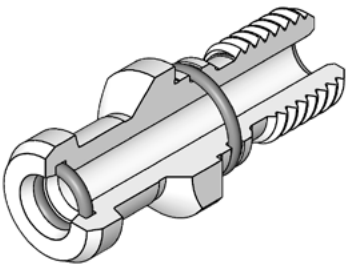

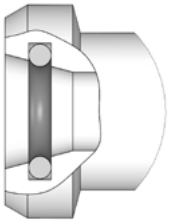

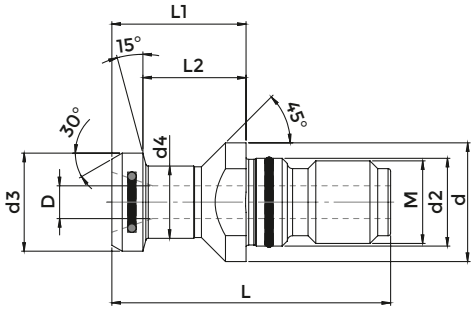

DIN 69872

COD.	DESCRIPTION	M	d	d2	d3	d4	L	L1	L2	D
217-21308	69872 / BT 40 - FORATO con DOPPIO OR	M16	23	17	19	14	54	29	23	7

ISO 7388/2 A PULL STUDS WITHOUT COOLANT BORE

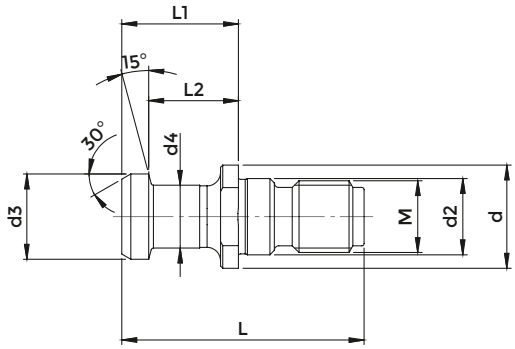

ISO 7388/A

COD. (WITHOUT OR)	COD. (WITH OR)	DESCRIPTION	M	d	d2	d3	d4	L	L1	L2
217-21613	-	7388/2A ISO30 - NON FORATO	M 12	16	13	12	8	44	24	19
217-21617	217-21619	7388/2A ISO40 - NON FORATO	M 16	23	17	19	14	54	26	20
217-22381	-	7388/2A ISO45 - NON FORATO	M 20	30	21	23	17	65	30	23
217-21618	217-21620	7388/2A ISO50 - NON FORATO	M 24	36	25	28	21	74	34	25

ISO 7388/2 A PULL STUDS WITH COOLANT BORE

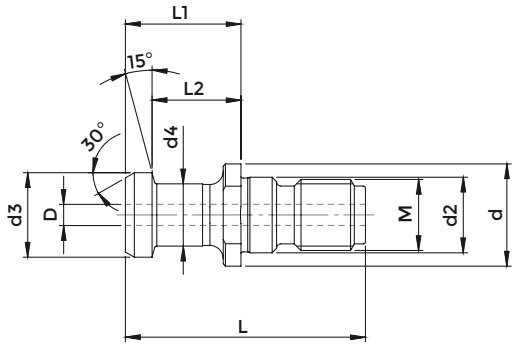

ISO 7388/A

COD. (WITHOUT OR)	COD. (WITH OR)	DESCRIPTION	M	d	d2	d3	d4	L	L1	L2	D
217-21614	217-21623	7388/2A ISO40 - FORATO	M 16	23	17	19	14	54	26	20	7
217-22372	-	7388/2A ISO45 - FORATO	M 20	30	21	23	17	65	30	23	9,5
217-21615	217-21624	7388/2A ISO50 - FORATO	M 24	36	25	28	21	74	34	25	11,5

ISO 7388/2 A PULL STUDS WITH ID COUNTERBORE

ISO 7388/A

ID counterbore is carried out upon customer specification

ISO 7388/2 B PULL STUDS (ISO 7388-3 form UD - UF) WITHOUT COOLANT BORE

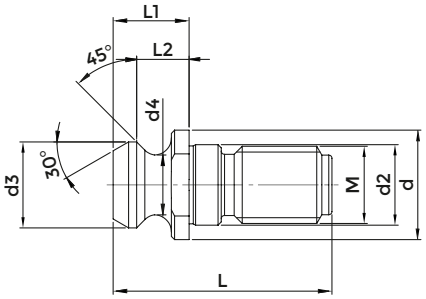

ISO 7388/B

COD. (WITHOUT OR)	COD. (WITH OR)	DESCRIPTION	M	d	d2	d3	d4	L	L1	L2
217-21603	-	7388/2B ISO30 - NON FORATO	M 12	17	12,5	13,3	9,3	34	11,8	8,1
217-21608	217-21611	7388/2B ISO40 - NON FORATO	M 16	22,5	17	18,9	12,9	44,5	16,4	11,1
217-22382	-	7388/2B ISO45 - NON FORATO	M 20	30	21	24	16,3	56	20,9	14,8
217-21609	217-21612	7388/2B ISO50 - NON FORATO	M 24	37	25	29,1	19,6	65,5	25,5	17,9

ISO 7388/2 B PULL STUDS (ISO 7388-3 form UD - UF) WITH COOLANT BORE

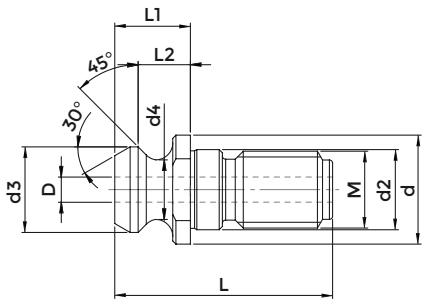

ISO 7388/B

COD. (WITHOUT OR)	COD. (WITH OR)	DESCRIPTION	M	d	d2	d3	d4	L	L1	L2	D
217-21601	217-21621	7388/2B ISO40 - FORATO	M 16	22,5	17	18,9	12,9	44,5	16,4	11,1	7,3
217-22373	-	7388/2B ISO45 - FORATO	M 20	30	21	24	16,3	56	20,9	14,8	9,2
217-21602	217-21622	7388/2B ISO50 - FORATO	M 24	37	25	29,1	19,6	65,5	25,5	17,9	11,5

ISO 7388/2 B PULL STUDS (ISO 7388-3 form UD - UF) WITH ID COUNTERBORE

ISO 7388/B

ID counterbore is carried out upon customer specification

BT PULL STUDS (ISO 7388-3 form JD - JF) WITHOUT COOLANT BORE

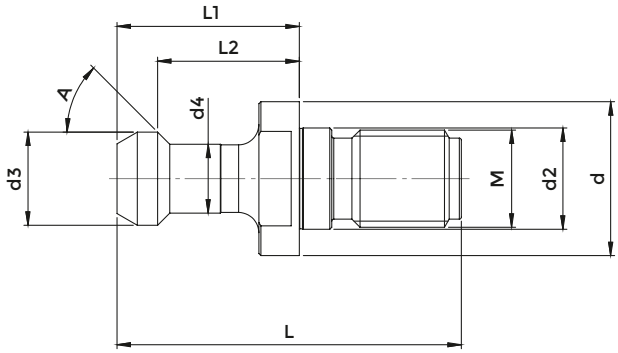

MAS BT

COD. (WITHOUT OR)	COD. (WITH OR)	DESCRIPTION	A	M	d	d2	d3	d4	L	L1	L2
217-21507	-	BT 30 - 45° NON FORATO	45 °	M 12	16,5	12,5	11	7	43	23	18
217-21508	-	BT 30 - 60° NON FORATO	60°	M 12	16,5	12,5	11	7	43	23	18
217-21509	-	BT 35 - 45° NON FORATO	45°	M 12	20	13	13	8,5	48	28	22,5
217-21501	217-21402	BT 40 - 45° NON FORATO	45°	M 16	23	17	15	10	60	35	28
217-21502	217-21401	BT 40 - 60° NON FORATO	60°	M 16	23	17	15	10	60	35	28
217-21503	217-21403	BT 40 - 90° NON FORATO	90°	M 16	23	17	15	10	60	35	28
3297	-	BT 45 - 45° NON FORATO	45°	M 20	31	21	19	14	70	40	31
3298	-	BT 45 - 60° NON FORATO	60°	M 20	31	21	19	14	70	40	31
217-21504	217-21405	BT 50 - 45° NON FORATO	45°	M 24	38	25	23	17	85	45	35
217-21505	217-21404	BT 50 - 60° NON FORATO	60°	M 24	38	25	23	17	85	45	35
217-21506	217-21406	BT 50 - 90° NON FORATO	90°	M 24	38	25	23	17	85	45	35

BT PULL STUDS (ISO 7388-3 form JD - JF) WITH COOLANT BORE

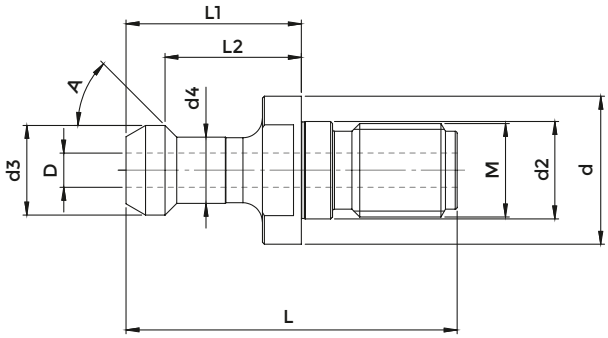

MAS BT

COD. (WITHOUT OR)	COD. (WITH OR)	DESCRIPTION	A	M	d	d2	d3	d4	L	L1	L2	D
217-21507SP	-	BT 30 - 45° FORATO	45°	M 12	16,5	12,5	11	7	43	23	18	2,5
217-21508-FOR	-	BT 30 - 60° FORATO	60°	M 12	16,5	12,5	11	7	43	23	18	2,5
217-22207	217-22317	BT 40 - 45° FORATO	45°	M 16	23	17	15	10	60	35	28	4
217-22206	217-22316	BT 40 - 60° FORATO	60°	M 16	23	17	15	10	60	35	28	4
217-22208	217-22318	BT 40 - 90° FORATO	90°	M 16	23	17	15	10	60	35	28	4
217-22210	217-22320	BT 50 - 45° FORATO	45°	M 24	38	25	23	17	85	45	35	6
217-22209	217-22319	BT 50 - 60° FORATO	60°	M 24	38	25	23	17	85	45	35	6
217-22211	217-22321	BT 50 - 90° FORATO	90°	M 24	38	25	23	17	85	45	35	6

BT PULL STUDS WITH COOLANT BORE AND DOUBLE O-RING

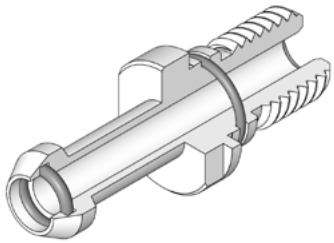

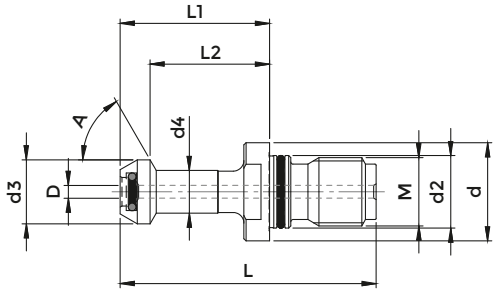

MAS BT

COD.	DESCRIPTION	A	M	d	d2	d3	d4	L	L1	L2	D
217-22362	BT 40 - 45° FORATO con DOPPIO OR	45°	M 16	23	17	15	10	60	35	28	3
217-22363	BT 40 - 60° FORATO con DOPPIO OR	60°	M 16	23	17	15	10	60	35	28	3
217-21412	BT 50 - 45° FORATO con DOPPIO OR	45°	M 24	38	25	23	17	85	45	35	6
217-21413	BT 50 - 60° FORATO con DOPPIO OR	60°	M 24	38	25	23	17	85	45	35	6
217-21414	BT 50 - 90° FORATO con DOPPIO OR	90°	M 24	38	25	23	17	85	45	35	6

BT TYPE PULL STUDS SUITABLE FOR DIN 69871 SHANKS WITHOUT COOLANT BORE

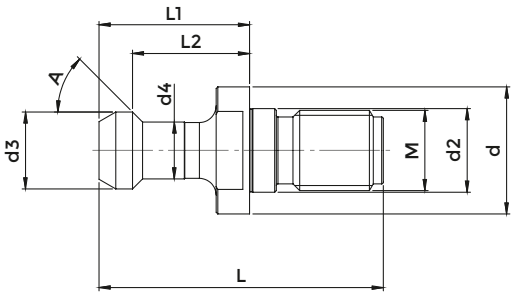

DIN 69871

COD. (WITHOUT OR)	COD. (WITH OR)	DESCRIPTION	A	M	d	d2	d3	d4	L	L1	L2
217-22090	217-21408	SK 40 - 45° NON FORATO	45°	M 16	23	17	15	10	57	32	25
-	4631	SK 40 - 60° NON FORATO	60°	M 16	23	17	15	10	57	32	25
217-22027	217-21409	SK 40 - 90° NON FORATO	90°	M 16	23	17	15	10	57	32	25

BT TYPE PULL STUDS SUITABLE FOR DIN 69871 SHANKS WITH COOLANT BORE

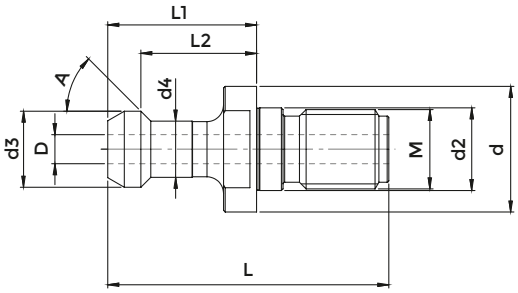

DIN 69871

COD. (WITHOUT OR)	COD. (WITH OR)	DESCRIPTION	A	M	d	d2	d3	d4	L	L1	L2	D
217-22213	217-22323	SK 40 - 45° FORATO	45°	M 16	23	17	15	10	57	32	25	4
-	217-22322	SK 40 - 60° FORATO	60°	M 16	23	17	15	10	57	32	25	4
-	217-22324	SK 40 - 90° FORATO	90°	M 16	23	17	15	10	57	32	25	4

JIS B 6339 PULL STUDS WITH COOLANT BORE

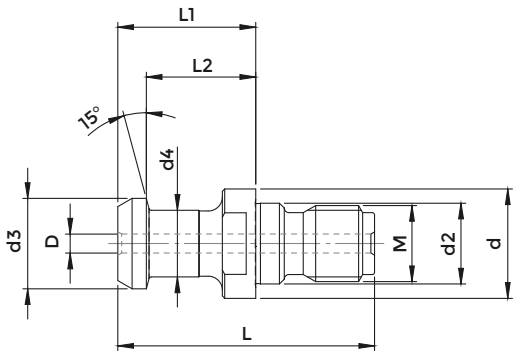

JIS B 6339

COD. (WITHOUT OR)	COD. (WITH OR)	DESCRIPTION	M	d	d2	d3	d4	L	L1	L2	D
217-22325	-	6339 ISO 30 - FORATO	M 12	16,5	12,5	12	8	43	23,4	18,4	4
217-22361	217-22326	6339 ISO 40 - FORATO	M 16	23	17	19	14	54	29	23	4
217-22134	217-22327	6339 ISO 40 - FORATO	M 16	23	17	19	14	54	29	23	7
-	217-22328	6339 ISO 50 - FORATO	M 24	38	25	28	21	74	34	25	10

JIS B 6339 PULL STUDS WITH COOLANT BORE AND GRINDED HEAD

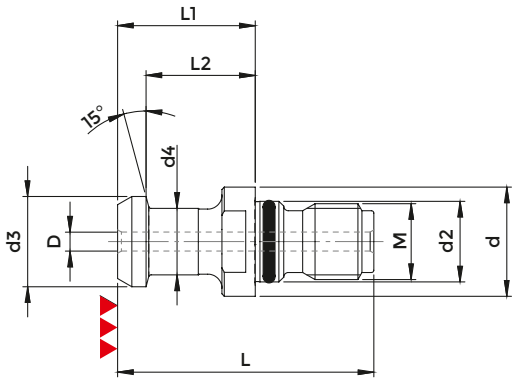

JIS B 6339

COD.	DESCRIPTION	M	d	d2	d3	d4	L	L1	L2	D
611-2031-01	6339 ISO 40 FORATO con RASAMENTO RETTIFICATO	M 16	23	17	19	14	54	29	23	4

PULL STUDS FOR ISO 20 SHANK

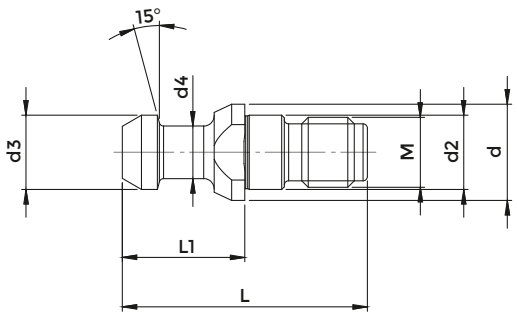

ISO 20

COD.	DESCRIPTION	M	d	d2	d3	d4	L	L1
217-22374	ISO 20 - M 8 / L 28	M 8	11	8,5	8,5	6	28	14

OTT PULL STUDS ADAPTERS TO DIN 2080

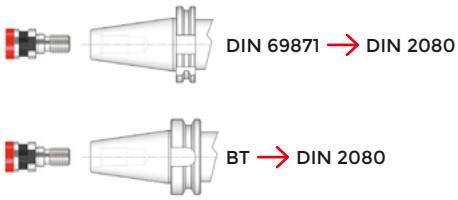

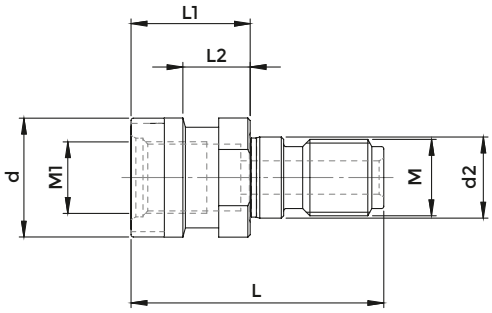

OTT

COD.	DESCRIPTION	M	M1	d	d2	L	L1	L2
217-22025	OTT M 16 - TC 40	M 16	M 16	25,3	17	53	25	13,6
217-22040	OTT M 16 - BT 40	M 16	M 16	25,3	17	56	28	16,6
217-22024	OTT M 24 - CONO 50	M 24	M 24	39,6	25	65	25	13

BIESSE PULL STUDS

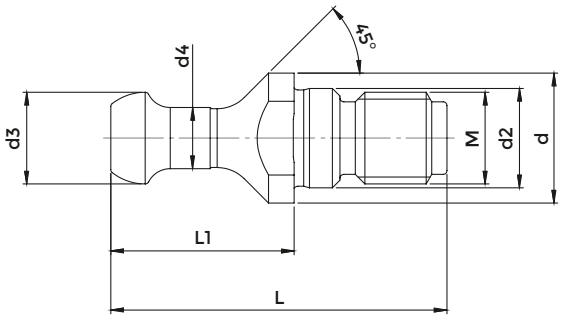

BIESSE

COD.	DESCRIPTION	M	d	d2	d3	d4	L	L1
217-22158	BIESSE ISO 30 - M 12	M 12	17	13	12	8	44	24

BRIDGEPORT PULL STUDS

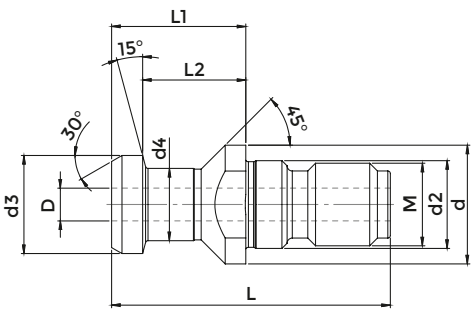

BRIDGEPORT

COD.	DESCRIPTION	M	d	d2	d3	d4	L	L1	L2	D
217-22253	BRIDGEPORT ISO 40 - M 16	M 16	23	17	19	14	54	29	23	7

C.B. FERRARI PULL STUDS

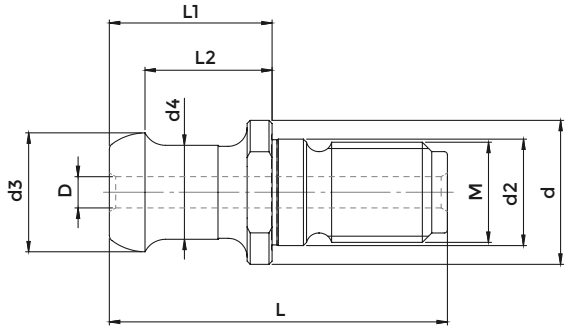

C.B. FERRARI

COD.	DESCRIPTION	M	d	d2	d3	d4	L	L1	L2	D
217-22017	C.B. FERRARI ISO40 - M16	M 16	23	17	19	15	54	26	20,31	5

C.B. FERRARI PULL STUDS WITH NUT

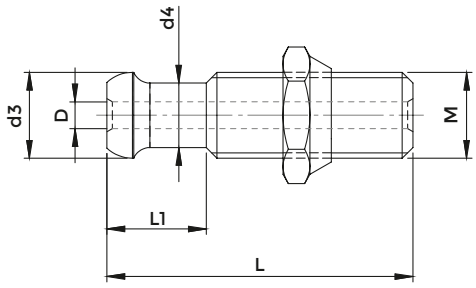

C.B. FERRARI

COD.	DESCRIPTION	M	d3	d4	L	L1	D
217-22046	C.B. FERRARI ISO40 - M16/DADO	M 16	16	12	57	18,5	5

CHIRON PULL STUDS

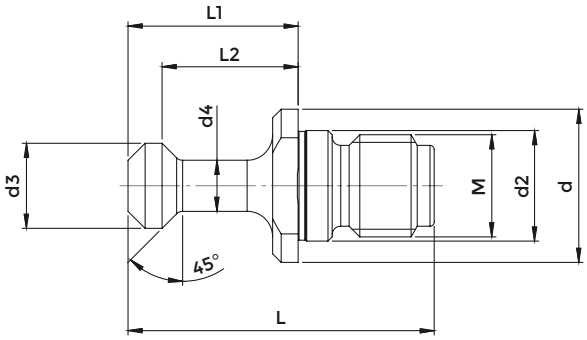

CHIRON

COD.	DESCRIPTION	M	d	d2	d3	d4	L	L1	L2
217-22048	CHIRON ISO 30 - M 12	M 12	18	13	10	6	36	20	16

CINCINNATI PULL STUDS

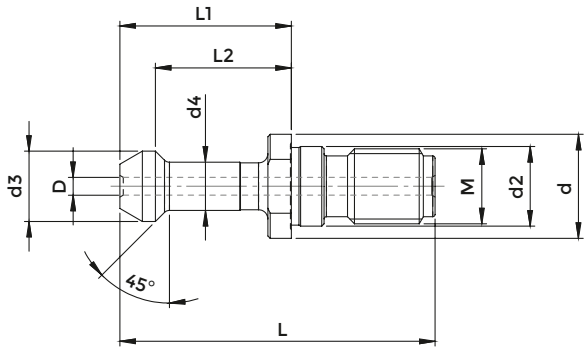

CINCINNATI

COD.	DESCRIPTION	M	L	L1	L2	d	d2	d3	d4	D
217-22030	CINCINNATI ISO 40 - M16 / L1=36,6	M 16	67,3	36,6	29	22,2	17	15	10,3	3,8
217-22010	CINCINNATI ISO 40 - M16 / L1=39,4	M 16	67,3	39,4	31,75	22,2	17	15	10,3	3,8

CORREA PULL STUD BOLTS

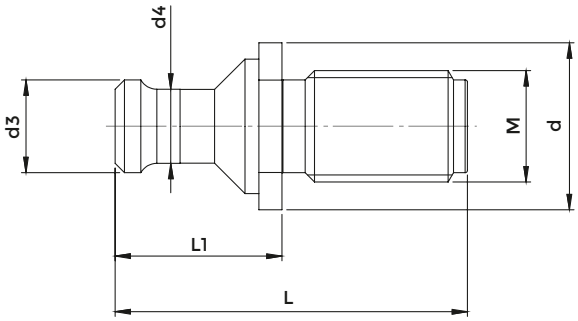

CORREA

COD.	DESCRIPTION	M	d	d3	d4	L	L1
217-22135	CORREA ISO 50 - M 24	M 24	36	20	16	76	36

MECCANICA CORTINI PULL STUDS

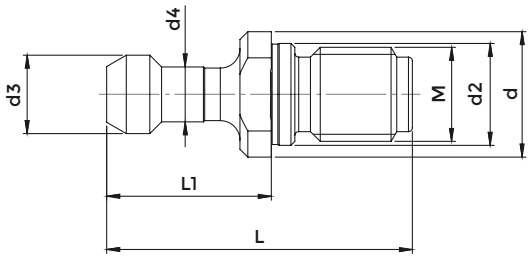

CORTINI

COD.	DESCRIPTION	M	d	d2	d3	d4	L	L1
217-22254	CORTINI ISO 30 - M 12	M 12	16	13	10	7	39	21

FAMUP PULL STUDS

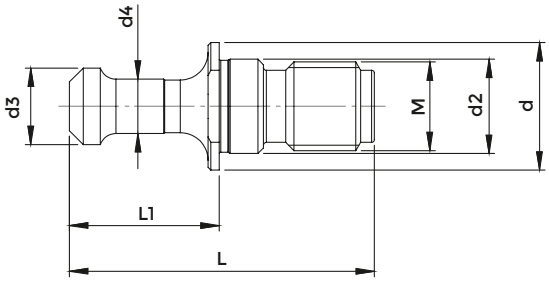

FAMUP

COD.	DESCRIPTION	M	d	d2	d3	d4	L	L1
217-22137	FAMUP ISO 30 - M12	M 12	16	13	9,8	5,8	40	20
217-22051	FAMUP ISO 40 - M16 / L=55	M 16	23	17	13,8	9,8	55	27
217-22052	FAMUP ISO 40 - M16 / L=58	M 16	23	17	13,8	9,8	58	30

GLORIA PULL STUDS

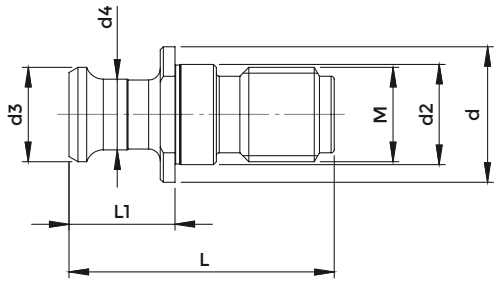

GLORIA

COD.	DESCRIPTION	M	d	d2	d3	d4	L	L1
217-22370	GLORIA ISO 40 - M 16	M 16	23	17	16	12	45	18

MAZAK PULL STUDS WITHOUT COOLANT BORE

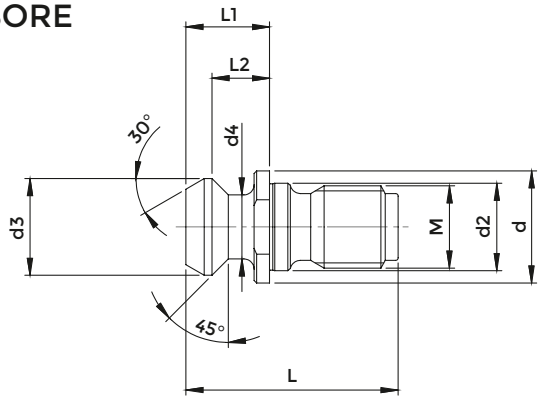

MAZAK

COD. (WITHOUT OR)	COD. (WITH OR)	DESCRIPTION	M	d	d2	d3	d4	L	L1	L2	
217-22375	217-22376	MAZAK SK 40 - NON FORATO	M 16	21,8	17	18,79	12,44	41,25	16,25	11,17	DIN 69871/ CAT
217-22377	217-22378	MAZAK BT 40 - NON FORATO	M 16	22	17	18,79	12,44	44,1	19,1	14,02	BT

MAZAK PULL STUDS WITH COOLANT BORE

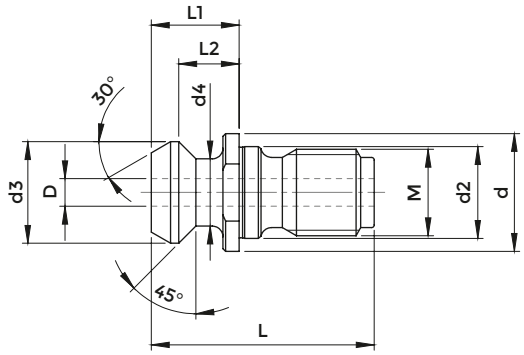

MAZAK

COD. (WITHOUT OR)	COD. (WITH OR)	DESCRIPTION	M	d	d2	d3	d4	L	L1	L2	D	
217-22003	217-22313	MAZAK SK 40 - FORATO	M16	21,8	17	18,79	12,44	41,25	16,25	11,17	7	DIN 69871/ CAT
217-22047	217-22314	MAZAK BT 40 - FORATO	M16	22	17	18,79	12,44	44,1	19,1	14,02	7	BT
217-22383	217-22384	MAZAK SK 50 - FORATO	M24	35,5	25	28,95	20,82	65,4	25,4	17,78	10	DIN 69871/ CAT
217-22356	217-22358	MAZAK BT 50 - FORATO	M24	37	25	28,95	20,82	65,2	25,2	17,58	10	BT

MAZAK PULL STUDS WITH COOLANT BORE AND COUNTERBORE

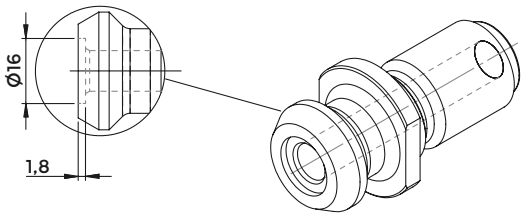

MAZAK

COD. (WITHOUT OR)	COD. (WITH OR)	DESCRIPTION	M	d	d2	d3	d4	L	L1	L2	D	
217-22187	217-22315	MAZAK SK 50 con LAMATURA	M24	35,5	25	28,95	20,82	65,4	25,4	17,78	10	DIN 69871 / CAT
217-22355	217-22357	MAZAK BT 50 con LAMATURA	M24	37	25	28,95	20,82	65,2	25,2	17,58	10	BT

OKUMA PULL STUDS (FOR DIN) WITH COOLANT BORE AND GRINDED HEAD

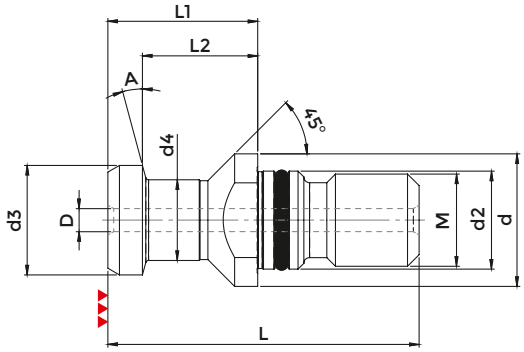

OKUMA

COD.	DESCRIPTION	M	d	d2	d3	d4	L	L1	L2	D	A
611-2033-02	OKUMA SK 40 - FORATO	M 16	23	17	19	14	54	26	20	4	15°

OKUMA PULL STUDS (FOR BT) WITH COOLANT BORE AND GRINDED HEAD

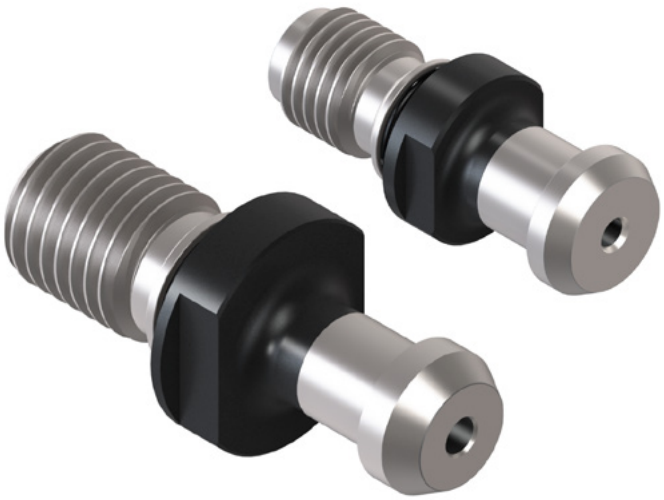

FIG. 1

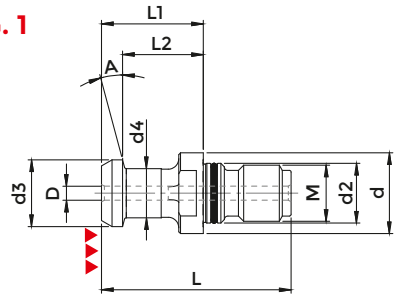

FIG. 2

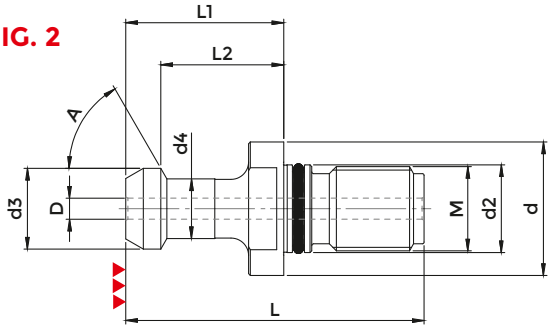

OKUMA

COD.	DESCRIPTION	M	d	d2	d3	d4	L	L1	L2	D	A	FIG.
611-2031-01	OKUMA BT 40 - FORATO	M 16	23	17	19	14	54	29	23	4	15°	1
613-2030-33-03	OKUMA BT 50 - FORATO	M 24	38	25	23	17	85	45	35	6	60°	2

OLIVETTI OCN PULL STUDS

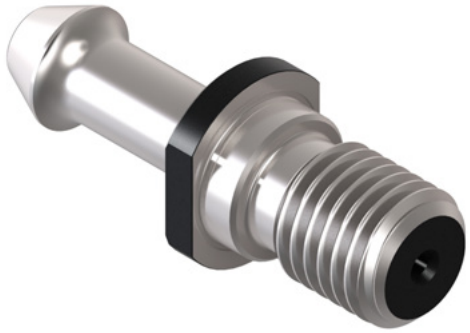

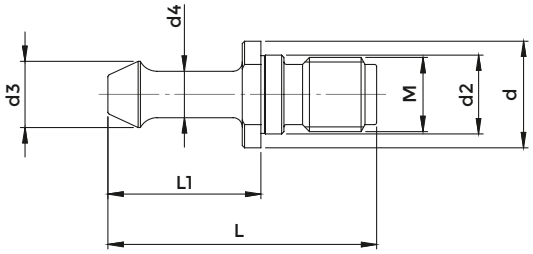

OLIVETTI OCN

COD.	DESCRIPTION	M	d	d2	d3	d4	L	L1
217-22136	OLIVETTI ISO 40 - M 16	M 16	23	17	14,3	10	58	33

RAMBAUDI PULL STUDS

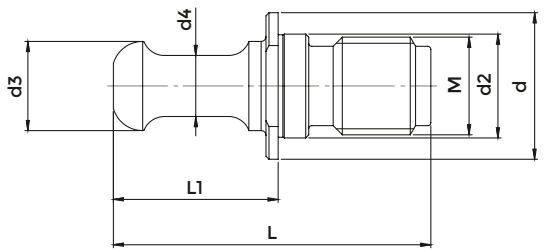

RAMBAUDI

COD.	DESCRIPTION	M	d	d2	d3	d4	L	L1
217-22049	RAMBAUDI ISO 40 - M 16	M 16	24	17	14,6	10	52	27
217-22050	RAMBAUDI ISO 50 - M 24	M 24	35,8	25	20	16	79,5	39,5

SCM / MORBIDELLI PULL STUDS

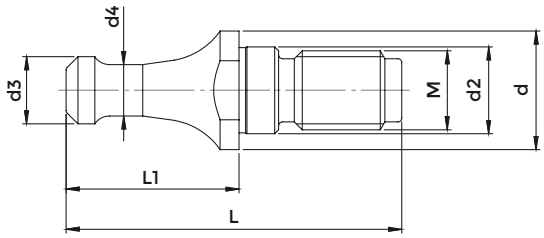

SCM MORBIDELLI

COD.	DESCRIPTION	M	d	d2	d3	d4	L	L1
217-22369	SCM/MORBIDELLI ISO 30 - M 10	M 10	15	11	8,5	6,5	42,5	21,9

SECMU PULL STUDS

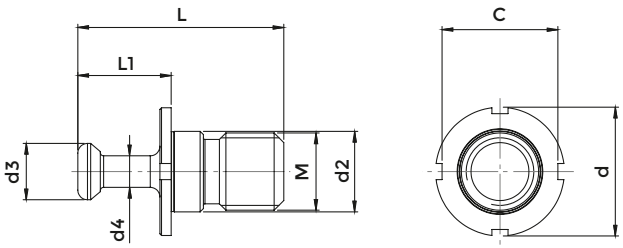

SECMU

COD.	DESCRIPTION	M	d	d2	d3	d4	L	L1	C
217-22138	SECMU ISO 50 - M 24	M 24	40	25	17,5	9,8	64	29	36

SET PULL STUDS

COD.	DESCRIPTION
217-21201SET	SET CODOLI DIN69872 ISO40 FORATI
217-21202SET	SET CODOLI DIN69872 ISO50 FORATI
217-21206SET	SET CODOLI DIN69872 ISO30 NON FORATI
217-21207SET	SET CODOLI DIN69872 ISO40 NON FORATI
217-21208SET	SET CODOLI DIN69872 ISO50 NON FORATI
217-21301SET	SET CODOLI DIN69872 ISO40 + OR
217-21302SET	SET CODOLI DIN69872 ISO50 + OR
217-21305SET	SET CODOLI DIN69872 ISO40-FORO+OR
217-21306SET	SET CODOLI DIN69872 ISO50-FORO+OR
217-21401SET	SET CODOLI MAS403 BT ISO40 30°+OR
217-21402SET	SET CODOLI MAS403 BT ISO40 45°+OR
217-21403SET	SET CODOLI MAS403 BT ISO40 90°+OR
217-21404SET	SET CODOLI MAS403 BT ISO50 30°+OR
217-21405SET	SET CODOLI MAS403 BT ISO50 45°+OR
217-21406SET	SET CODOLI MAS403 BT ISO50 90°+OR
217-21408SET	SET CODOLI 69871-MASBT-ISO40/45°+OR
217-21409SET	SET CODOLI 69871-MASBT-ISO40/90°+OR
217-21501SET	SET CODOLI MAS403 BT ISO40 45°
217-21502SET	SET CODOLI MAS403 BT ISO40 30°
217-21503SET	SET CODOLI MAS403 BT ISO40 90°
217-21504SET	SET CODOLI MAS403 BT ISO50 45°
217-21505SET	SET CODOLI MAS403 BT ISO50 30°
217-21506SET	SET CODOLI MAS403 BT ISO50 90°
217-21507SET	SET CODOLI MAS403 BT ISO30 45°
217-21508SET	SET CODOLI MAS403 BT ISO30 30°
217-21601SET	SET CODOLI ISO40 45°ISO7388/2B FORATI
217-21602SET	SET CODOLI ISO50 45°ISO7388/2B FORATI
217-21608SET	SET CODOLI ISO40 45°ISO7388/2B NON FORATI
217-21609SET	SET CODOLI ISO50 45°ISO7388/2B NON FORATI
217-21611SET	SET CODOLI ISO40 ISO7388/2B + OR
217-21612SET	SET CODOLI ISO50 ISO7388/2B + OR

follows >>

COD.	DESCRIPTION
217-21614SET	SET CODOLI DIN7388/2A ISO40 FORATI
217-21615SET	SET CODOLI DIN7388/2A ISO50 FORATI
217-21620SET	SET CODOLI ISO50 ISO7388/2A + OR
217-21621SET	SET CODOLI ISO40 7388/2B FORATI+OR
217-21622SET	SET CODOLI ISO50 7388/2B FORATI+OR
217-21623SET	SET CODOLI ISO40-7388/2A-FORATI+OR
217-21624SET	SET CODOLI ISO50-7388/2A-FORATI+OR
217-22003SET	SET CODOLI ISO40 X MAZAK L=41,25
217-22024SET	SET CODOLI ADATT.-OTT SYSTEM-ISO50
217-22025SET	SET CODOLI ADATT.-OTT SYSTEM-TC40
217-22047SET	SET CODOLI ISO40 X MAZAK L=44,1
217-22090SET	SET CODOLI 69871 MASBT403 ISO40/45°
217-22134SET	SET CODOLI JIS B6339 ISO40 FORO Ø7
217-22187SET	SET CODOLI ISO50MAZAK-L65,4-TC50
217-22206SET	SET CODOLI MAS403 BT ISO40 30° FORATI
217-22207SET	SET CODOLI MAS403 BT ISO40 45° FORATI
217-22208SET	SET CODOLI MAS403 BT ISO40 90° FORATI
217-22209SET	SET CODOLI MAS403 BT ISO50 30° FORATI
217-22210SET	SET CODOLI MAS403 BT ISO50 45° FORATI
217-22211SET	SET CODOLI MAS403 BT ISO50 90° FORATI
217-22213SET	SET CODOLI BT40 45°(L1-32MM)FORATI
217-22253SET	SET CODOLI BRIDGEPORT 2385406 VMC1000
217-22313SET	SET CODOLI MAZAK FORATI+OR ISO40M16
217-22314SET	SET CODOLI MAZAK FORATI+OR ISO40M16
217-22315SET	SET CODOLI MAZAK FORATI+OR ISO50M24
217-22317SET	SET CODOLI MAS403 BT40 45°+OR FORATI
217-22319SET	SET CODOLI MAS403 BT50 30°+OR FORATI
217-22320SET	SET CODOLI MAS403 BT50 45°+OR FORATI
217-22321SET	SET CODOLI MAS403 BT50 90°+OR FORATI
217-22323SET	SET CODOLI 69871MASBT40/45°+OR FORATI
217-22327SET	SET CODOLI JIS B6339 40 FORO Ø7+OR
217-22328SET	SET CODOLI JIS B6339 ISO50 FORATI+OR

The dimensions of the pull studs are indicated in the specific tables

TAPPING ADAPTERS WITHOUT CLUTCH

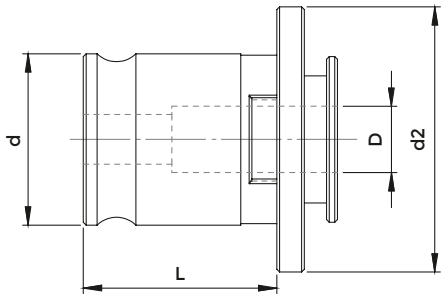

B

COD.	DESCRIPTION	THREAD	D	d	d2	L
4077	B.0	M 2 ÷ M 10	Ø 2,5 ÷ Ø 8	13	22	19,5
IBC1	B.1	M 2 ÷ M 12 (* M 18)	Ø 2,5 ÷ Ø 11 (* Ø 14)	19	30	21,5
IBC2	B.2	M 5 ÷ M 20 (* M 30)	Ø 6,0 ÷ Ø 18 (* Ø 22)	31	46	35
IBC3	B.3	M 14 ÷ M 36 (* M 48)	Ø11,0 ÷ Ø 28 (* Ø 36)	48	68	55,5

*Adapters with SCREWS

EQUIPMENT CASES FOR TAPPING CHUCKS OF TAPPING ADAPTERS WITHOUT CLUTCH

COD.	DESCRIPTION	CASE	SLEEVE
7532	Corredo B.1	3695	6 Bussole Art.3390: Ø 3,5 (M 3) - Ø 4,5 (M 4) - Ø 6 (M 6) - Ø 8 (M 8) - Ø 9 (M 12) - Ø 10 (M 10)
7533	Corredo B.2	3695	7 Bussole Art.3391: Ø 8 (M 8) - Ø 9 (M 12) - Ø 10 (M 10) - Ø 11 (M 14) - Ø 12 (M 16) - Ø 14 (M 18) - Ø 16 (M 20)

Is possible to complete the equipment adding the Tapping Chuck you are interested on.

TAPPING ADAPTERS WITHOUT CLUTCH WITH SCREWS

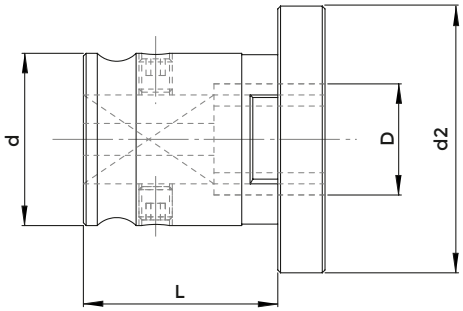

B-GR

COD.	DESCRIPTION	THREAD	D	d	d2	L
3390 GR	B.1 - GR	M 16 ÷ M 18	Ø 12 - Ø 14	19	30	21,5
3391 GR	B.2 - GR	M 27 ÷ M 30	Ø 20 - Ø 22	31	46	35
3392 GR	B.3 - GR	M 39 ÷ M 48	Ø 32 - Ø 36	48	68	55,5

On GR tapping adapters, the tapping tool is locked by screws on guide diameter, this makes possible bigger sizes clamping.

TAPPING ADAPTERS WITH CLUTCH

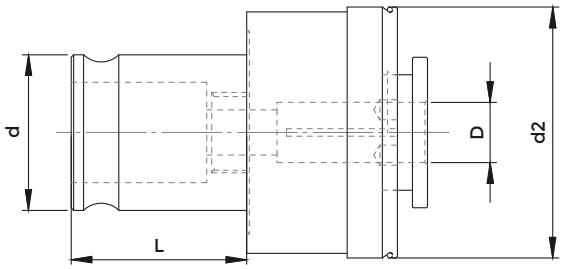

BF

COD.	DESCRIPTION	THREAD	D	d	d2	L
4078	BF.0	M 2 ÷ M 10	Ø 2,5 ÷ Ø 8	13	23	19,5
IBS1	BF.1	M 2 ÷ M 12 (* M 18)	Ø 2,5 ÷ Ø 12 (* Ø 14)	19	32	21,5
IBS2	BF.2	M 5 ÷ M 20 (* M 30)	Ø 6,0 ÷ Ø 18 (* Ø 22)	31	50	35
IBS3	BF.3	M 14 ÷ M 36 (* M 48)	Ø11,0 ÷ Ø 28 (* Ø 36)	48	72	55,5

*Adapters with SCREWS

EQUIPMENT CASES FOR TAPPING CHUCKS OF TAPPING ADAPTERS WITH CLUTCH

COD.	DESCRIPTION	CASE	SLEEVE
7534	Corredo BF.1	3695	6 Bussole Art.3387: Ø 3,5 (M 3) - Ø 4,5 (M 4) - Ø 6 (M 6) - Ø 8 (M 8) - Ø 9 (M 12) - Ø 10 (M 10)
7535	Corredo BF.2	3695	7 Bussole Art.3388: Ø 8 (M 8) - Ø 9 (M 12) - Ø 10 (M 10) - Ø 11 (M 14) - Ø 12 (M 16) - Ø 14 (M 18) - Ø 16 (M 20)

Is possible to complete the equipment adding the Tapping Chuck you are interested on.

TAPPING ADAPTERS WITH CLUTCH WITH SCREWS

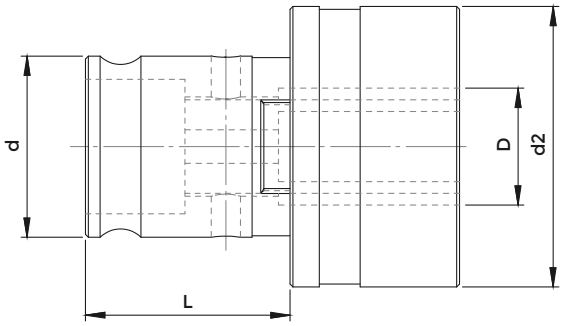

BF-GR

COD.	DESCRIPTION	THREAD	D	d	d2	L
3387 GR	BF.1 - GR	M 16 ÷ M 18	Ø 14	19	32	21,5
3388 GR	BF.2 - GR	M 27 ÷ M 30	Ø 20 - Ø 22	31	50	35
3389 GR	BF.3 - GR	M 39 ÷ M 48	Ø 32 - Ø 36	48	72	55,5

On GR tapping adapters, the tapping tool is locked by screws on guide diameter, this makes possible bigger sizes clamping.

REDUCTIONS FROM ADAPTER TO ADAPTER

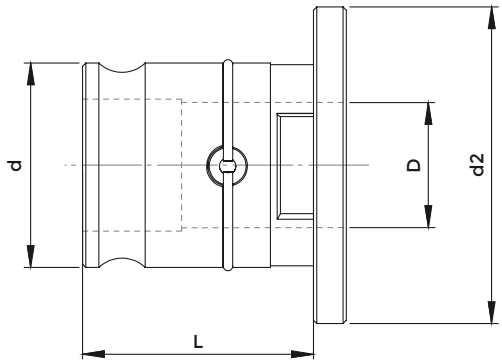

COD.	DESCRIPTION	d	D	d2	L
IBC1/0	B.1/B.0	19	13	30	21,5
IBC2/1	B.2/B.1	31	19	48	35
0397	B.3/B.1	48	19	70	55,5
IBC3/2	B.3/B.2	48	31	70	55,5

TAPPING ADAPTERS WITH ER COLLET

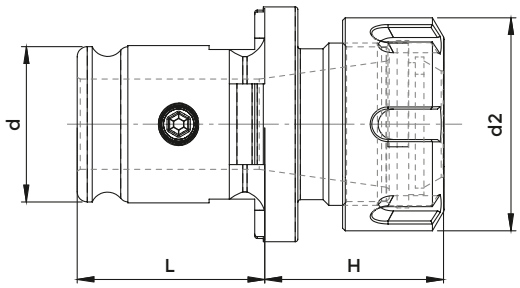

COD.	DESCRIPTION	ER	d	d2	H	L	NUT	WRENCH	COLLET
3385	B.1 - ER 16	ER 16 1÷12	19	32	29	21,5	4993	3698	0364
3386	B.2 - ER 25	ER 25 1÷20	31	42	38	35	4995	3669	0996
3160	B.2 - ER 32	ER 32 2÷25	31	50	62	35	4996	3670	0988

Tapping tool square is locked by the screws on guide diameter

ACCESSORIES

p. 631

THREADING DIE ADAPTERS

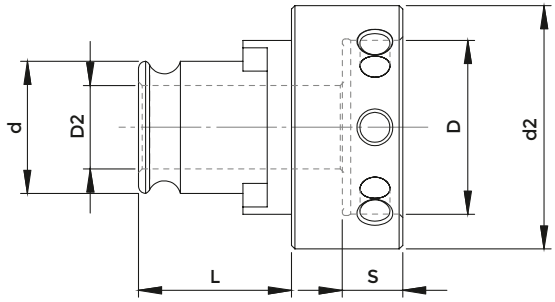

THREADING DIE ADAPTERS

COD.	DESCRIPTION	d	L	D	S	d2	D2
025100165	B.1 - F / 16 x 5	19	21,5	16	4,8	25	12,5
025100205	B.1 - F / 20 x 5	19	21,5	20	4,8	30	12,5
025100207	B.1 - F / 20 x 7	19	21,5	20	6,5	30	12,5
025100259	B.1 - F / 25 x 9	19	21,5	25	8,5	35	12,5
025103011	B.1 - F / 30 x 11	19	21,5	30	10	40	12,5
025103810	B.1 - F / 38 x 10	19	21,5	38	9	48	14,2
025103814	B.1 - F / 38 x 14	19	21,5	38	13	48	14,2
025200205	B.2 - F / 20 x 5	31	35	20	4,8	30	15
025200207	B.2 - F / 20 x 7	31	35	20	6,5	30	15
025200259	B.2 - F / 25 x 9	31	35	25	8,5	35	15
025203011	B.2 - F / 30 x 11	31	35	30	10	40	22
025203810	B.2 - F / 38 x 10	31	35	38	9	48	22
025203814	B.2 - F / 38 x 14	31	35	38	13	48	22
025204514	B.2 - F / 45 x 14	31	35	45	13	57	22
025204518	B.2 - F / 45 x 18	31	35	45	17	57	22

SHANKS DIMENSIONS FOR METRIC TAPPING TOOLS

SHANK Ø x □	STANDARD DIN 352	REINFORCED DIN 371	STANDARD DIN 376	STANDARD ISO	REINFORCED ISO	TYPE OF SLEEVE
2,50 x 2,10	M 1,0	M 1,0	M 3,5	-	-	0-1
2,50 x 2,10	M 1,4	M 1,4	-	-	-	0-1
2,50 x 2,10	M 1,6	M 1,6	-	-	-	0-1
2,50 x 2,10	M 1,8	M 1,8	-	-	-	0-1
2,80 x 2,10	M 2,0	M 2,0	M 4,0	-	-	0-1
2,80 x 2,10	M 2,2	M 2,2	-	-	-	0-1
2,80 x 2,10	M 2,5	M 2,5	-	-	-	0-1
3,15x2,50	-	-	-	M 4,0	M 3,0	0-1
3,50x2,70	M 3,0	M 3,0	M 5,0	-	-	0-1
3,55x2,80	-	-	-	M 4,5	M 3, 5	0-1
4,00x3,15	M 3,5	M 3,5	-	M 5,0	M 4,0	0-1
4,50x3,40	M 4,0	M 4,0	M 6,0	-	-	0-1
5,00x4,00	-	-	-	-	M 5, 0	0-1
5,50x4,30	-	-	M7,0	-	-	0-1
5,60x4,50	-	-	-	M 7,0	-	0-1
6,00x4,90	M 5,0	M 5,0	-	-	-	0-1-2
6,00x4,90	M 6, 0	M 6, 0	-	-	-	0-1-2
6,00x4,90	M 8, 0	-	M 8, 0	-	-	0-1-2
6,30x5,00	-	-		M 8,0	M 6,0	0-1-2
7,00x5,50	M 10,0	-	M 10,0	-	-	0-1-2
7,10x5,60	-	-	-	M 9,0	-	0-1-2
8,00x6,20		M 8,0	-	M 10,0	M 8,0	0-1-2
9,00x7,00	M 12,0	-	M 12,0	M 12, 0	-	1-2
10,00x8,00		M 10,0	-	-	M 10,0	1-2
11,00x9,00	M 14,0	-	M 14,0	-	-	1-2-3
11,20x9,00	-	-	-	M 14,0	-	1-2-3
12,00x9,00	M 16,0	-	M 16,0	-	-	1-2-3
12,50x10,00	-	-	-	M 16,0	-	2-3
14,00x11,00	M 18,0	-	M 18,0	-	-	2-3
14,00x11,20	-	-	-	M 18,0	-	2-3
14,00x11,20	-	-	-	M 20,0	-	2-3
16,00x12,00	M 20,0	-	M 20,0	-	-	2-3
16,00x12,50	-	-	-	M 22,0	-	2-3
18,00x14,00	-	-	-	M 24,0	-	2-3
18,00x14,50	M 22,0	-	M 22,0	-	-	2-3
18,00x14,50	M 24,0	-	M 24,0	-	-	2-3
20,00x16,00	M 27,0	-	M 27,0	M 27,0	-	2-3
20,00x16,00	-	-	-	M 30,0	-	2-3
22,00x18,00	M 30,0	-	M 30,0		-	2-3
25,00x20,00	M 33,0	-	M 33,0	M 36,0	-	3
28,00x22,00	M 36,0	-	M 36,0	-	-	3
32,00x24,00	M 39,0	-	M 39,0	-	-	3
32,00x24,00	M 42,0	-	M 42,0	-	-	3
36,00x29,00	M 45,0	-	M 45,0	-	-	3
36,00x29,00	M 48,0	-	M 48,0	-	-	3

ORIENTABLE ASSEMBLY STANDS NT - SK - BT - DOUBLE CONTACT SHANKS

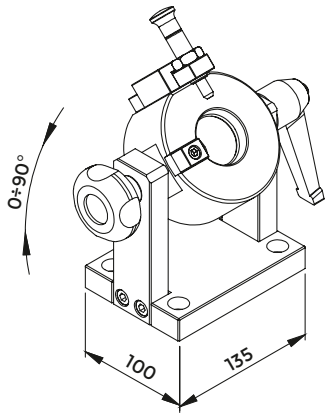

ISO DIN 2080 - DIN 69871 - BT - DOUBLE CONTACT SHANKS

COD.	DESCRIPTION	SCREW	HANDLE	KNOB
4438	SMU - CONO 30	1031	1032	1033
4439	SMU - CONO 40	1031	1032	1033
4440	SMU - CONO 45	1031	1032	1033
4441	SMU - CONO 50	1031	1032	1033

Flange locking is guaranteed by the spring system

ORIENTABLE ASSEMBLY STANDS HSK AND POLYGONAL SHANKS

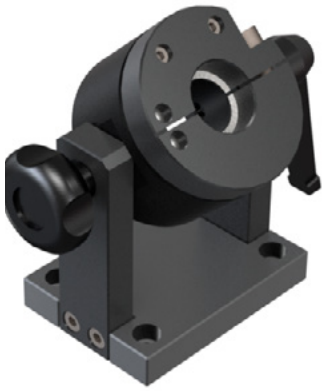

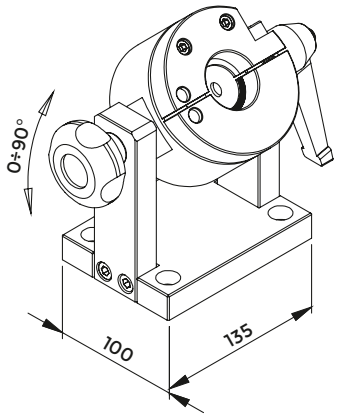

DIN 69893 (A+C - B+D - E - F) - ISO 26623-1

HSK DIN 69893 SHANKS

COD.	DESCRIPTION	HANDLE	KNOB
4598	SMU - HSK 25	1032	1033
4599	SMU - HSK 32	1032	1033
4600	SMU - HSK 40	1032	1033
4601	SMU - HSK 50	1032	1033
4602	SMU - HSK 63	1032	1033
4603	SMU - HSK 80	1032	1033
4604	SMU - HSK 100	1032	1033

POLYGONAL SHANKS

COD.	DESCRIPTION	HANDLE	KNOB
4599	SMU - POLIGONALE C 32	1032	1033
4600	SMU - POLIGONALE C 40	1032	1033
4601	SMU - POLIGONALE C 50	1032	1033
4602	SMU - POLIGONALE C 63	1032	1033
4603	SMU - POLIGONALE C 80	1032	1033
4604	SMU - POLIGONALE C100	1032	1033

ORIENTABLE ASSEMBLY STANDS DIN2080-DIN69871-MAS403BT-ANSI B5.50 CAT-HSK63

DIN2080-DIN69871-MAS403BT-ANSI B5.50 CAT-HSK63 — ECONOMIC VERSION

COD.	DESCRIPTION	ATTACK
268-30001	BLOCCO ISO40/BT40/TC40/HSK63	DIN2080-DIN69871-MAS403BT-ANSI B5.50 CAT-HSK63

STEEL TOOLING CLAMPERS

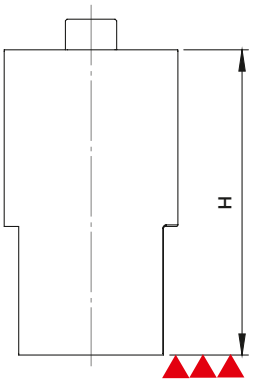

BMU TOOLS

COD.	DESCRIPTION	H
2190	BMU - CONO 30	70
2191	BMU - CONO 40	95
2193	BMU - CONO 50	130

Made with hardened steel, burnished and grinded.

DOUBLE POSITION ASSEMBLY STANDS

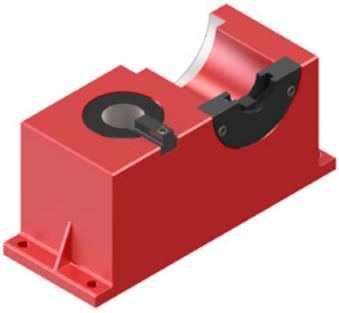

FIG. 1

FIG. 2

FIG. 3

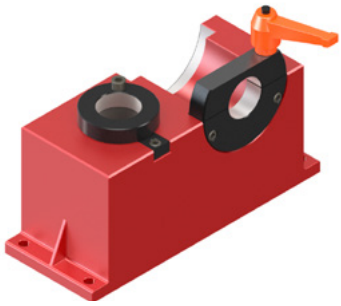

FIG. 4

SMD TOOLS

COD.	DESCRIPTION	FIGURE	L x P x H
237-32310	SMD - ISO 40 / DIN 2080	1	350 x 135 x 155
237-32510	SMD - ISO 50 / DIN 2080	1	350 x 135 x 155
237-32320	SMD - TC 40 / DIN 69871	1	350 x 135 x 155
237-32520	SMD - TC 50 / DIN 69871	1	350 x 135 x 155
237-33320	SMD - TC 40 DOPPIO CONTATTO	1	350 x 135 x 155
237-33520	SMD - TC 50 DOPPIO CONTATTO	1	350 x 135 x 155
237-32130	SMD - BT 30 / MAS 403	1	350 x 135 x 155
237-32330	SMD - BT 40 / MAS 403	1	350 x 135 x 155
237-32530	SMD - BT 50 / MAS 403	1	350 x 135 x 155
237-33120	SMD - BT 30 DOPPIO CONTATTO	1	350 x 135 x 155
237-33330	SMD - BT 40 DOPPIO CONTATTO	1	350 x 135 x 155
237-33530	SMD - BT 50 DOPPIO CONTATTO	1	350 x 135 x 155

COD.	DESCRIPTION	FIGURE	L x P x H
237-32450	SMD - HSK 63A+C	2	350 x 135 x 155
237-32650	SMD - HSK 100 A+C	2	350 x 135 x 155
237-32470	SMD - HSK 63 E	2	350 x 135 x 155
237-32470	SMD - HSK 63 F	2	350 x 135 x 155

COD.	DESCRIPTION	FIGURE	L x P x H
237-33210	SMD - POLIGONALE C 40	3	350 x 135 x 155
237-33310	SMD - POLIGONALE C 50	3	350 x 135 x 155
237-33410	SMD - POLIGONALE C 63	3	350 x 135 x 155
237-33510	SMD - POLIGONALE C 80	3	350 x 135 x 155

COD.	DESCRIPTION	FIGURE	L x P x H
237-32490	SMD - VDI 30 / DIN 69880	4	350 x 135 x 155
237-32590	SMD - VDI 40 / DIN 69880	4	350 x 135 x 155
237-32690	SMD - VDI 50 / DIN 69880	4	350 x 135 x 155

SPINDLE SEAT TAPER CLEANERS

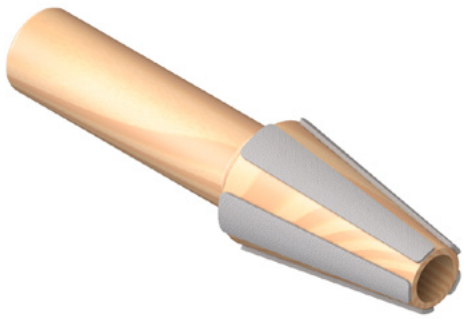

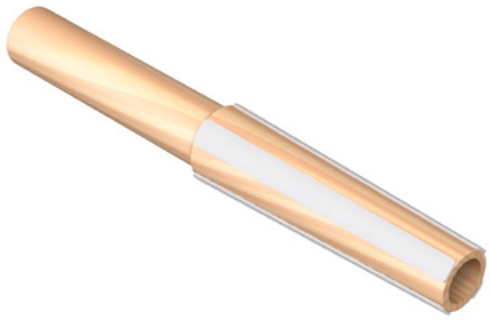

ISO SPINDLE SEAT

COD.	DESCRIPTION	ISO
4407	TP - ISO 30	30
4408	TP - ISO 40	40
4409	TP - ISO 45	45
4410	TP - ISO 50	50

MORSE TAPER SPINDLE SEAT

COD.	DESCRIPTION	CM
4411	TP - CM. 1	1
4412	TP - CM. 2	2
4413	TP - CM. 3	3
4414	TP - CM. 4	4
4415	TP - CM. 5	5
5065	TP - CM. 6	6

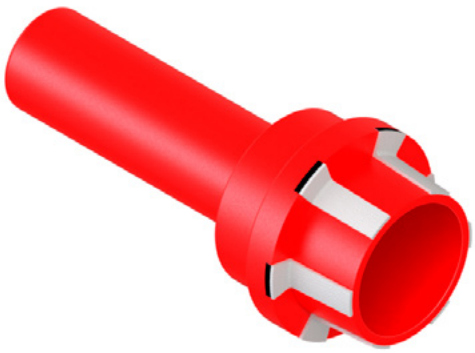

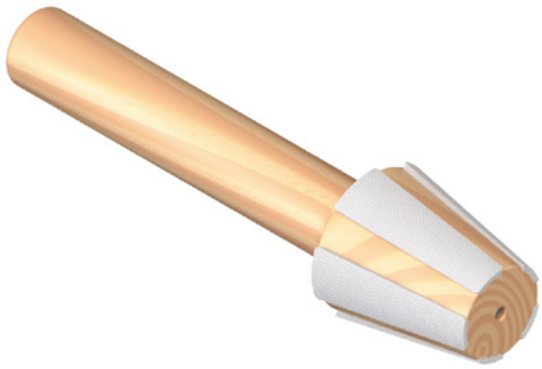

HSK SPINDLE SEAT

COD.	DESCRIPTION	HSK
5205	TP - HSK 32	32
5206	TP - HSK 40	40
5207	TP - HSK 50	50
5208	TP - HSK 63	63
5209	TP - HSK 80	80
5210	TP - HSK 100	100

ER COLLET SEAT TAPER CLEANERS

COD.	DESCRIPTION	ER
5375	TP - ER 16	16
5376	TP - ER 20	20
5377	TP - ER 25	25
5378	TP - ER 32	32
5379	TP - ER 40	40

TOOL STORES

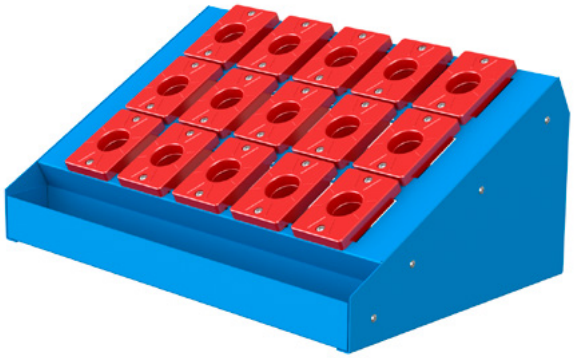

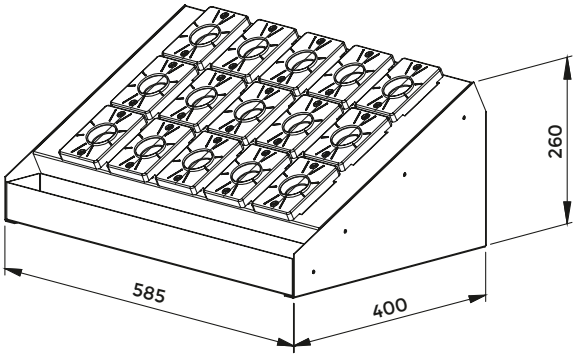

Supplied complete of red tool holder bushings.

COD.	DESCRIPTION	CHUCKS	NUMBER OF SEATS	TAPER BUSH	SCREW
ISO CHUCKS					
3700	MAG. ISO 30	30	15	4416	0033
3701	MAG. ISO 40	40	15	4417	0033
3702G	MAG. ISO 45	45	15	4418	0033
3703	MAG. ISO 50	50	12	4419	0033
HSK CHUCKS					
9460	MAG. HSK 32 A - C - E	32	15	9440	0033
9461	MAG. HSK 40 A - C - E	40	15	9441	0033
3750	MAG. HSK 50 A - C - E	50	15	4430	0033
3751	MAG. HSK 63 A - C - E	63	15	4431	0033
9462	MAG. HSK 80 A - C	80	15	9442	0033
3875	MAG. HSK100 A - C	100	15	5543	0033
9461	MAG. HSK 50 F	50	15	9441	0033
3750	MAG. HSK 63 F	63	15	4430	0033
3751	MAG. HSK 80 F	80	15	4431	0033
POLYGONAL CHUCKS					
9463	MAG. POLIGONALE C 32	32	15	9443	0033
9464	MAG. POLIGONALE C 40	40	15	9444	0033
9465	MAG. POLIGONALE C 50	50	15	9445	0033
9466	MAG. POLIGONALE C 63	63	15	9446	0033
9467	MAG. POLIGONALE C 80	80	12	9447	0033
MT CHUCKS					
9468	MAG. CM 2	2	15	9448	0033
9469	MAG. CM 3	3	15	9449	0033
3696	MAG. CM 4	4	15	4400	0033
3702G	MAG. CM 5	5	15	4418	0033
VDI CHUCKS					
3705	MAG. Ø 32 - VDI 30	30	15	5531	0033
3706	MAG. Ø 40 - VDI 40	40	15	5532	0033
5557	MAG. Ø 50 - VDI 50	50	12	5533	0033

upon request
with yellow
tool holder
bushing

BENCH SUPPORTS

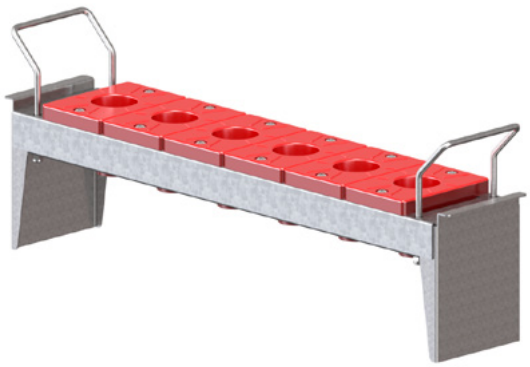

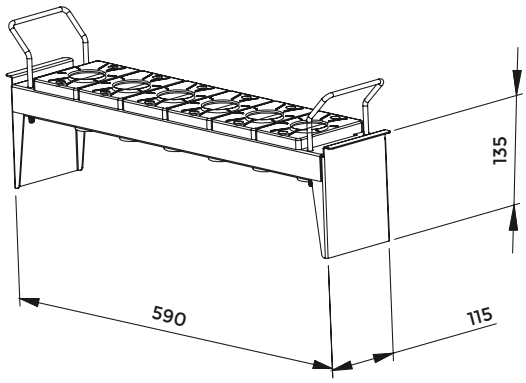

Supplied complete of red tool holder bushings.

COD.	DESCRIPTION	CHUCKS	NUMBER OF SEATS	TAPER BUSH
ISO CHUCKS				
4404	UNITÀ ISO 30	30	6	4416
4405	UNITÀ ISO 40	40	6	4417
4330G	UNITÀ ISO 45	45	6	4418G
4406	UNITÀ ISO 50	50	5	4419
HSK CHUCKS				
9450	UNITÀ HSK 32 A - C - E	32	6	9440
9451	UNITÀ HSK 40 A - C - E	40	6	9441
4428	UNITÀ HSK 50 A - C - E	50	6	4430
4429	UNITÀ HSK 63 A - C - E	63	6	4431
9452	UNITÀ HSK 80 A - C	80	5	9442
4794	UNITÀ HSK100 A - C	100	5	5543
9451	UNITÀ HSK 50 F	50	6	9441
4428	UNITÀ HSK 63 F	63	6	4430
4429	UNITÀ HSK 80 F	80	6	4431
POLYGONAL CHUCKS				
9453	UNITÀ POLIGONALE C 32	32	6	9443
9454	UNITÀ POLIGONALE C 40	40	6	9444
9455	UNITÀ POLIGONALE C 50	50	6	9445
9456	UNITÀ POLIGONALE C 63	63	6	9446
9457	UNITÀ POLIGONALE C 80	80	5	9447
MT CHUCKS				
9458	UNITÀ CM 2	2	6	9448
9459	UNITÀ CM 3	3	6	9449
4329	UNITÀ CM 4	4	6	4400
4330G	UNITÀ CM 5	5	6	4418G
VDI CHUCKS				
5369	UNITÀ Ø 32 - VDI 30	30	5	5531
5370	UNITÀ Ø 40 - VDI 40	40	5	5532
5371	UNITÀ Ø 50 - VDI 50	50	4	5533

upon request
with yellow
tool holder
bushing

TOOL HOLDER BUSHINGS

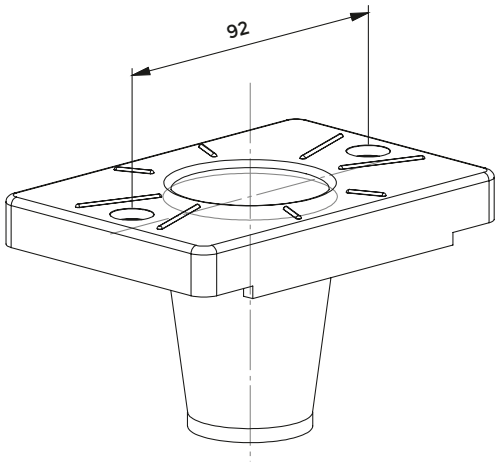

Supplied complete of red tool holder bushings.

COD.	DESCRIPTION	CHUCKS	SCREW
ISO CHUCKS			
4416	BOCCOLA ISO 30	30	0033
4417	BOCCOLA ISO 40	40	0033
4418G	BOCCOLA ISO 45	45	0033
4419	BOCCOLA ISO 50	50	0033
HSK CHUCKS			
9440	BOCCOLA HSK 32 A - C - E	32	0033
9441	BOCCOLA HSK 40 A - C - E	40	0033
4430	BOCCOLA HSK 50 A - C - E	50	0033
4431	BOCCOLA HSK 63 A - C - E	63	0033
9442	BOCCOLA HSK 80 A - C	80	0033
5543	BOCCOLA HSK 100 A - C	100	0033
9441	BOCCOLA HSK 50 F	50	0033
4430	BOCCOLA HSK 63 F	63	0033
4431	BOCCOLA HSK 80 F	80	0033
POLYGONAL CHUCKS			
9443	BOCCOLA POLIGONALE C 32	32	0033
9444	BOCCOLA POLIGONALE C 40	40	0033
9445	BOCCOLA POLIGONALE C 50	50	0033
9446	BOCCOLA POLIGONALE C 63	63	0033
9447	BOCCOLA POLIGONALE C 80	80	0033
CM CHUCKS			
9448	BOCCOLA CM 2	2	0033
9449	BOCCOLA CM 3	3	0033
4400	BOCCOLA CM 4	4	0033
4418	BOCCOLA CM 5	5	0033
VDI CHUCKS			
5531	BOCCOLA Ø 32 - VDI 30	30	0033
5532	BOCCOLA Ø 40 - VDI 40	40	0033
5533	BOCCOLA Ø 50 - VDI 50	50	0033

upon request
with yellow
tool holder
bushing

BRIGHT MAGNETIC RESETTER

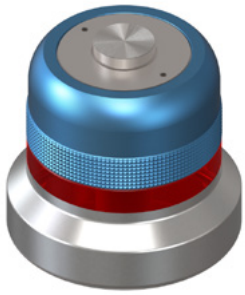

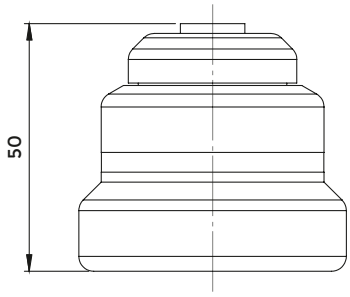

COD.	DESCRIPTION	BATTERY
0351	ZOP 50	0266

Permanent magnetic base

BUILD-IN MAGNETIC RESETTERS WITH DIAL GAUGE

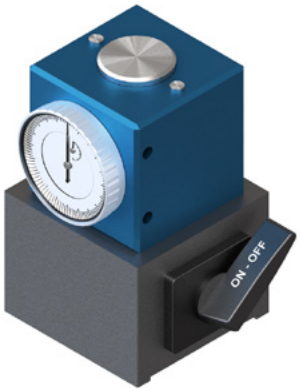

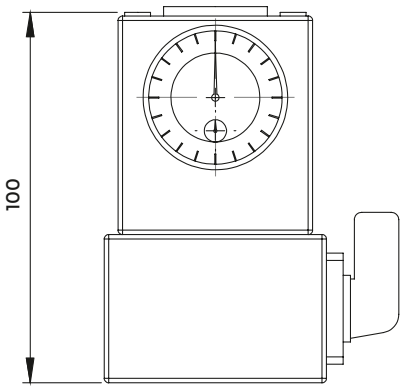

COD.	DESCRIPTION
0354	ZDI 100

- switch ON/OFF magnetic base
- dial gauge ø40 reading 0,01

BUILD-IN MAGNETIC RESETTERS WITH DIAL GAUGE

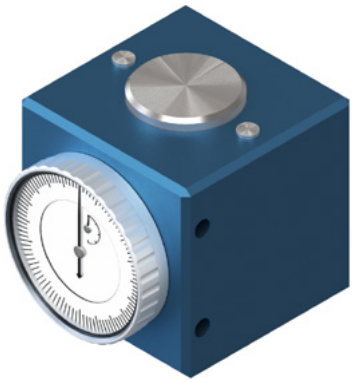

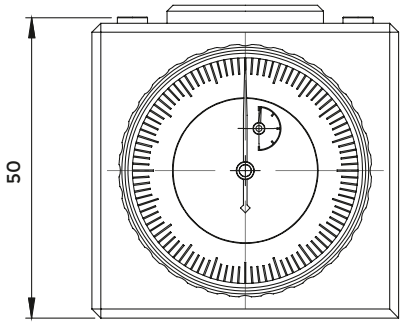

COD.	DESCRIPTION
0349	ZDI 50

- Permanent magnetic base
- dial gauge ø40 reading 0,01

FLOATING CENTERING DEVICE – GROUND

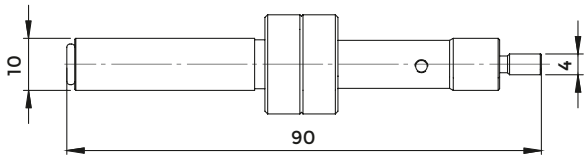

COD.	DESCRIPTION	REPLACEMENT SPRING
0356	CMP 10 - 4	0333

In CMP wrapping is included one spare spring

FLOATING CENTERING DEVICE – GROUND

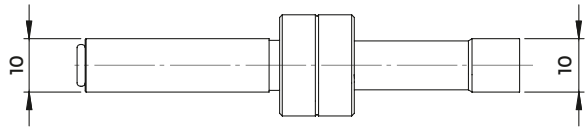

MAX 600 rpm

COD.	DESCRIPTION	REPLACEMENT SPRING
0357	CMP 10 - 10	0333

FLOATING CENTERING DEVICE – BURNISHED

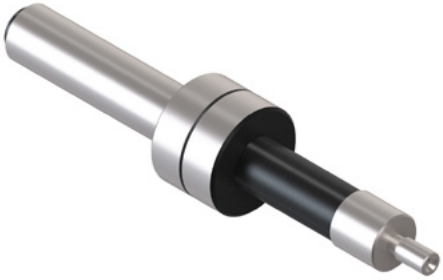

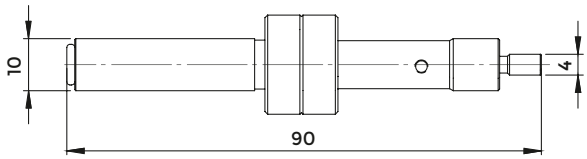

COD.	DESCRIPTION	REPLACEMENT SPRING
0242	CMB 10 - 4	0333

In CMP wrapping is included one spare spring

FLOATING CENTERING DEVICE – BURNISHED

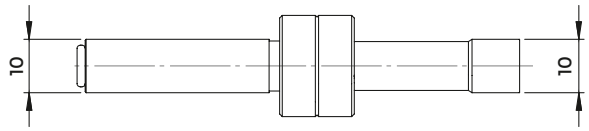

MAX 600 rpm

COD.	DESCRIPTION	REPLACEMENT SPRING
0243	CMB 10 - 10	0333

REPLACEMENT SPRINGS FOR CENTERING DEVICES

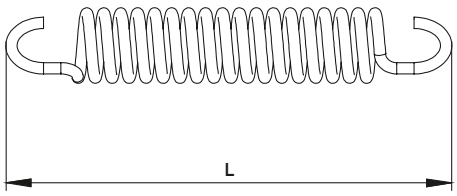

COD.	L
0333	50
0363	*55

* Recommended for edge finders without spring locking pin

NON MAGNETIC CENTERING DEVICE

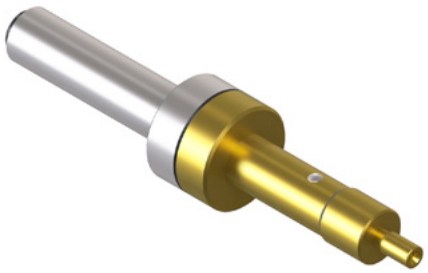

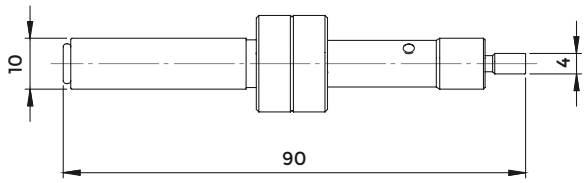

COD.	DESCRIPTION	REPLACEMENT SPRING
0445	CMA 10 - 4	0333

In CMA wrapping is included one spare spring

NON MAGNETIC CENTERING DEVICE – CERAMIC HEAD

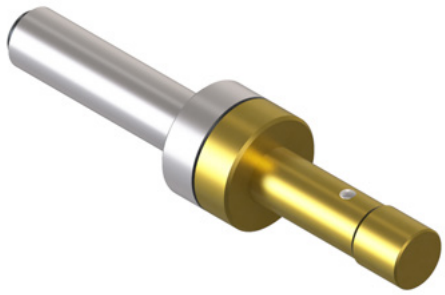

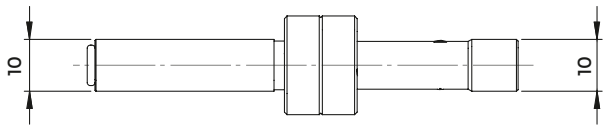

MAX 600 rpm

COD.	DESCRIPTION	REPLACEMENT SPRING
0447	CMA 10 - 10	0333

NON MAGNETIC CENTERING DEVICE – CERAMIC HEAD

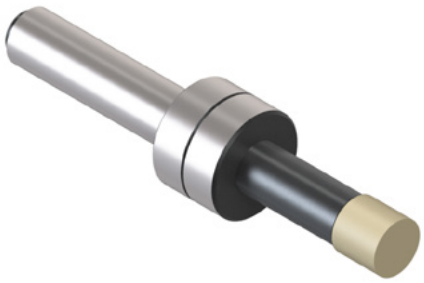

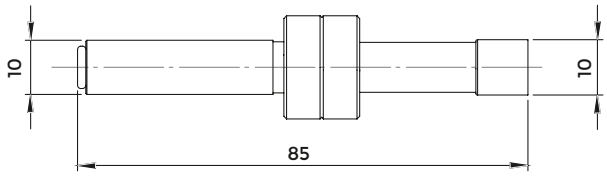

MAX 600 rpm

COD.	DESCRIPTION	REPLACEMENT SPRING
0455	CMD 10 - 10	0333

NON MAGNETIC SLIM CENTERING DEVICE – CERAMIC HEAD

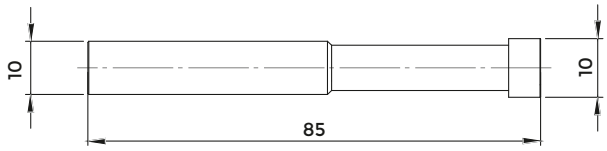

MAX 600 rpm

COD.	DESCRIPTION	REPLACEMENT SPRING
0457	CMC 10 - 10	0458

ELECTRONIC CENTERING DEVICE – WITH LIGHT

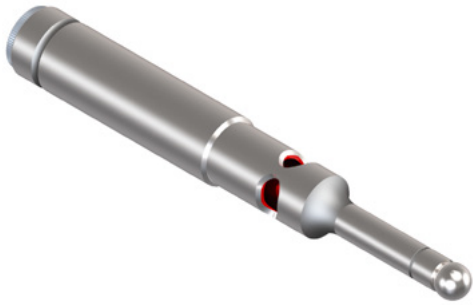

COD.	DESCRIPTION	L	BATTERY
0335	CSL 100	100	0266

with light signal

ELECTRONIC CENTERING DEVICE – WITH LIGHT AND SOUND

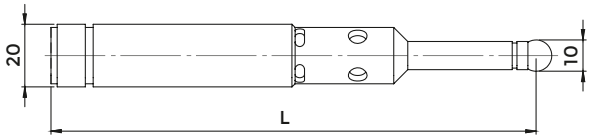

COD.	DESCRIPTION	L	BATTERY
0359	CSS 160	160	0562

with light and sound signal

ELECTRONIC 3D CENTERING DEVICE – WITH LIGHT AND SOUND

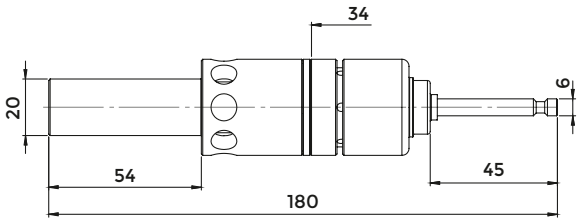

COD.	DESCRIPTION	TASTER	LED	BATTERY
0350	CTL 20 - 6	0322	0328	0595

3D with light and sound signal

TRIDIMENSIONAL POSITION DETECTORS WITH DIAL GAUGE

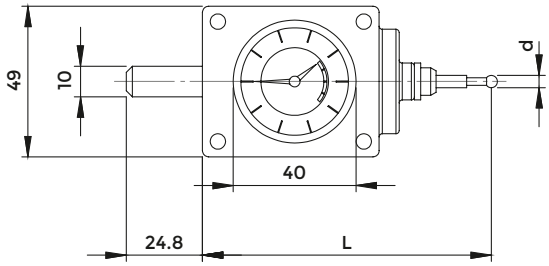

COD.	DESCRIPTION	d	L	TASTER
0541	CTZ 10 - 04	4	96	0619
0542	CTZ 10 - 08	8	136	0629

TRIDIMENSIONAL POSITION DETECTORS WITH DIAL GAUGE

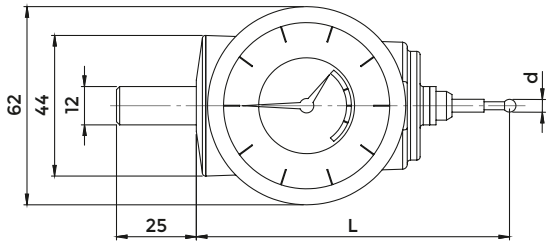

COD.	DESCRIPTION	d	L	TASTER
0543	CTN 12 - 04	4	100	0619
0544	CTN 12 - 08	8	140	0629

TRIDIMENSIONAL POSITION DETECTORS WITH DIAL GAUGE

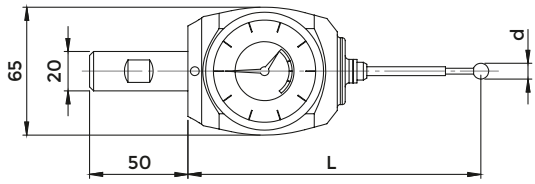

COD.	DESCRIPTION	d	L	TASTER
0584	CTA 20 - 04	4	113	0619
0585	CTA 20 - 08	8	153	0629

CERAMIC PROBE

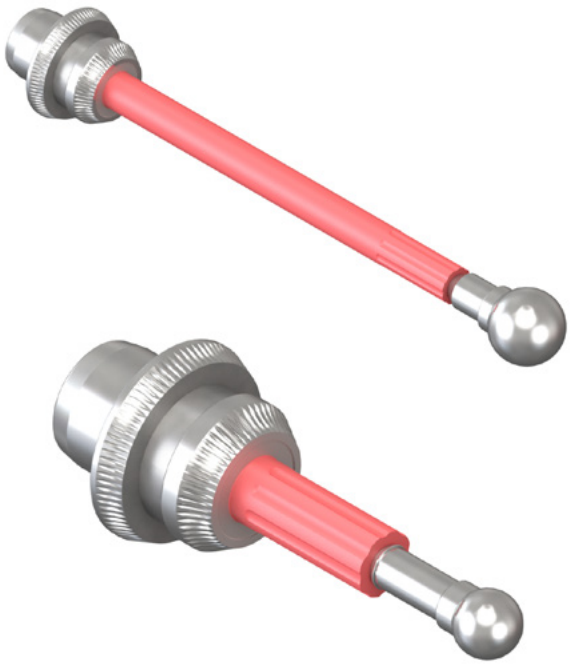

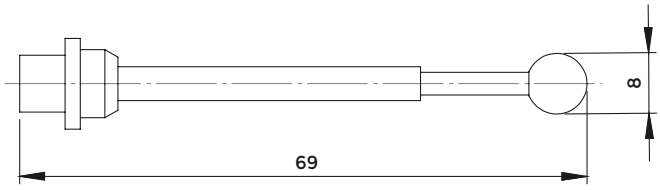

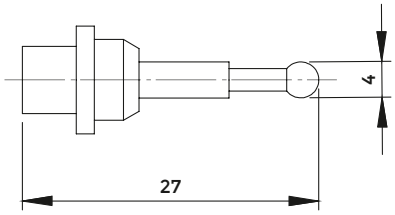

COD.	DESCRIPTION
0619	ASTINA CORTA d. 4
0629	ASTINA LUNGA d. 8

SPHERE COOLANT NOZZLES

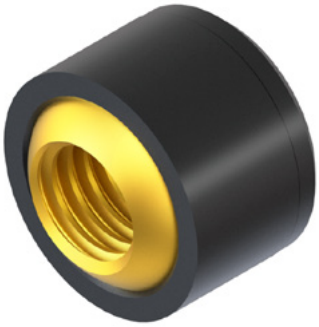

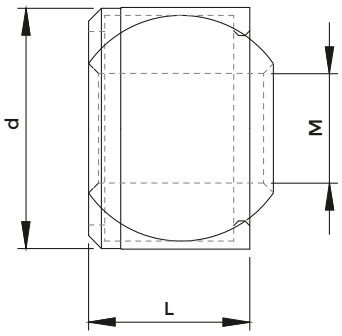

COD. G	COD. K	d	L	M
9200	833-001280	6	5	M 2,5
9201	833-001060	8	6	M 4
9202	833-001070	10	7	M 5
9203	833-001820	12	8	M 5
9204	833-001080	12	8	M 6
9205	833-001090	14	9	M 8
9206	833-001810	16	10	M 10x1

EXTENSIONS FOR COOLANT NOZZLES

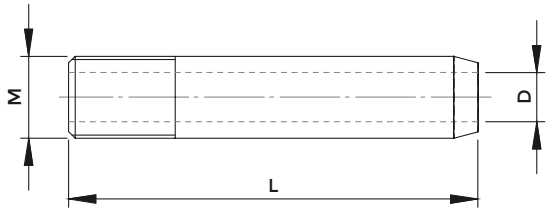

COD. G	COD. K	M	D	L
9210	-	M 3	1,5	25
9211	833-00151	M 4	1	30
9212	833-00152	M 4	2	30
9213	833-00153	M 5	2	30
9214	833-00154	M 5	3	40
9215	833-00155	M 6	2	35
9216	833-00156	M 6	3	35
9217	833-00157	M 6	4	50
9218	833-00158	M 8	2	40
9219	833-00159	M 8	3	40
9220	833-00160	M 8	4	40
9221	833-00161	M 8	5	50
9222	833-00162	M10x1	2	40
9223	-	M10x1	4	40
9224	833-00164	M10x1	6	50
9225	-	M10x1	8	50

SPHERE COOLANT NOZZLES FOR HIGH PRESSURE

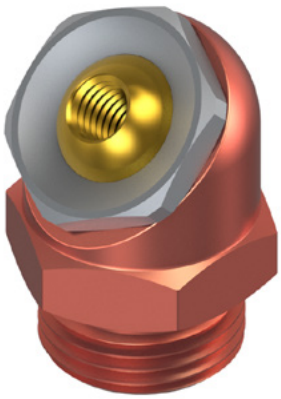

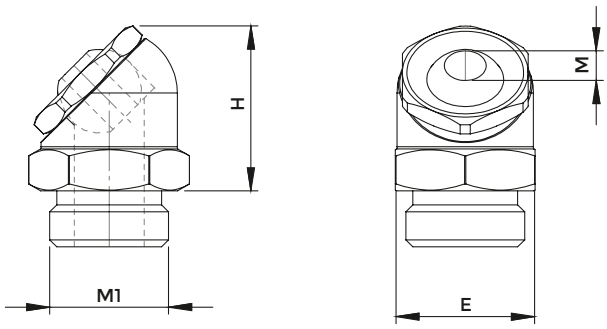

COD. G	M	E	M1	H
9235	M 3	16	1/8	19
9236	M 5	18	1/4	21
9237	M 6	20	3/8	23
9238	M 8	23	3/8	27

ORIENTABLE COOLANT NOZZLES FOR HIGH PRESSURE

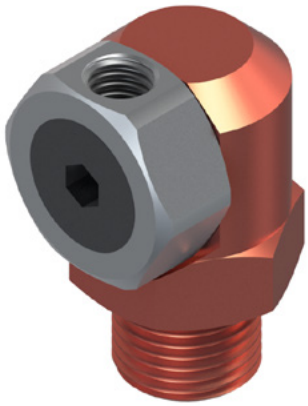

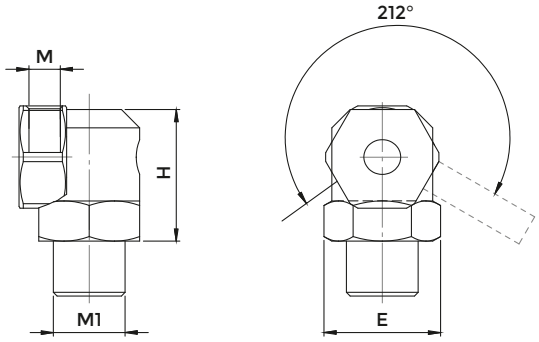

COD. G	M	E	M1	H
9240	M 4	12	1/8	17
9241	M 5	14	1/8	18
9242	M 6	17	1/4	21

SPACERS

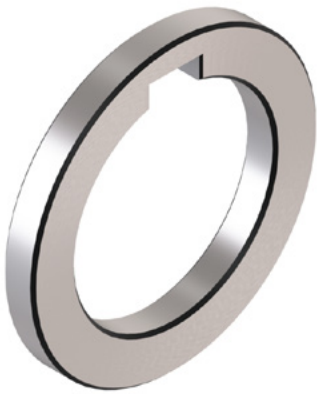

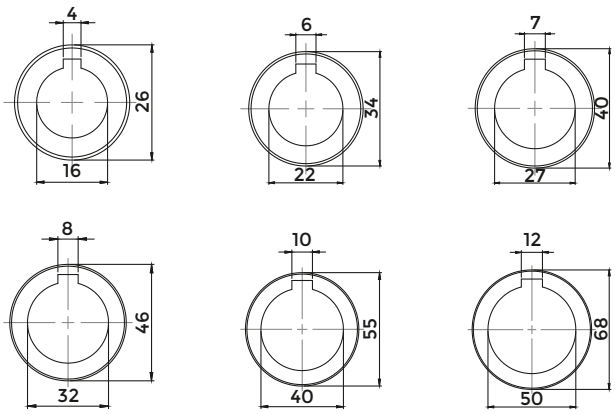

COD.	DESCRIPTION	THICKNESS
4084	AD - D.16	0,03 - 0,04 - 0,05 - 0,06 - 0,1 - 0,2 - 0,3 - 0,4 - 0,5 - 0,6 - 1,0 - 1,10 - 1,30 - 1,40 - 1,50 - 2,0 - 3,0 - 4,0 - 5,0 - 6,0 - 10,0 - 20,0 - 25,0 - 30,0 - 40,0
4085	AD - D.22	0,03 - 0,04 - 0,05 - 0,06 - 0,1 - 0,2 - 0,3 - 0,4 - 0,5 - 0,6 - 0,9 - 1,0 - 2,0 - 3,0 - 4,0 - 5,0 - 6,0 - 10,0 - 20,0 - 30,0 - 60,0 - 100, 0
4086	AD - D.27	0,03 - 0,04 - 0,05 - 0,06 - 0,1 - 0,2 - 0,3 - 0,4 - 0,5 - 0,6 - 0,7 - 0,8 - 1,0 - 2,0 - 3,0 - 4,0 - 5,0 - 6,0 - 10,0 - 20,0 - 30,0 - 60,0 - 100, 0
4087	AD - D.32	0,03 - 0,04 - 0,05 - 0,06 - 0,1 - 0,2 - 0,3 - 0,4 - 0,5 - 0,6 - 1,0 - 1,5 - 2,0 - 3,0 - 4,0 - 5,0 - 6,0 - 10,0 - 20,0 - 30,0 - 60,0 - 100, 0
4088	AD - D.40	0,03 - 0,04 - 0,05 - 0,06 - 0,1 - 0,15 - 0,2 - 0,3 - 0,4 - 0,5 - 0,6 - 0,7 - 0.8 - 1,0 - 1,5 - 2,0 - 3,0 - 4,0 - 5,0 - 6,0 - 7,0 - 10,0 - 20,0 - 30,0 - 60,0 - 100, 0
4089	AD - D.50	0,05 - 0,06 - 0,1 - 0,2 - 0,3 - 0,4 - 0,5 - 0,6 - 0,7 - 0,8 - 1,0 - 2,0 - 3,0 - 4,0 - 5,0 - 6,0 - 10,0 - 20,0 - 25,0 - 40,0 - 30,0 - 60,0 - 100, 0

MILL LOCKING CROSS HEAD SCREWS

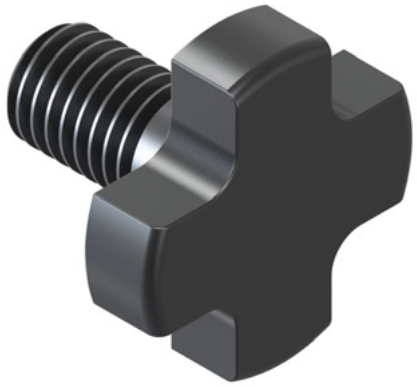

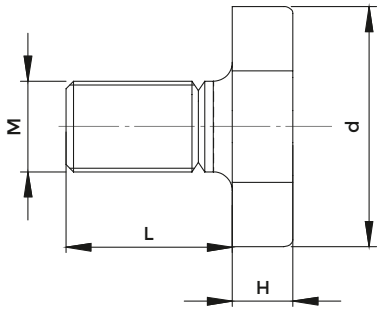

COD.	DESCRIPTION	M	d	L	H	WRENCH
811-107003	VTC 16	M 8	20	16	6	1032
811-107004	VTC 22	M 10	28	18	7	1032
811-107005	VTC 27	M 12	35	22	8	1032
811-107006	VTC 32	M 16	42	26	9	1032
811-107007	VTC 40	M 20	52	30	10	1032
811-107009	VTC 50	M 24	63	36	12	1032

MILL LOCKING CROSS HEAD SCREWS WITH COOLANT CHANNELS

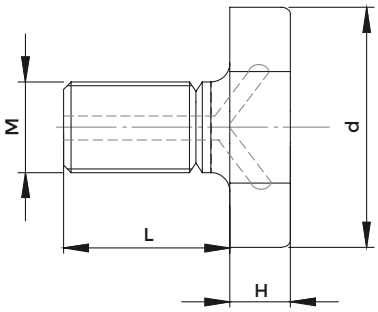

COD.	DESCRIPTION	M	d	L	H	WRENCH
811-107013	VPR 16	M 8	20	16	6	816-130002
811-107014	VPR 22	M 10	28	18	7	816-130003
811-107015	VPR 27	M 12	35	22	8	816-130004
811-107016	VPR 32	M 16	42	26	9	816-130005
811-107017	VPR 40	M 20	52	30	10	816-130006

WRENCHES FOR CROSS HEAD SCREWS

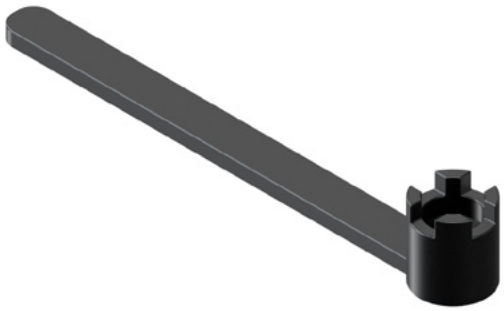

COD.	DESCRIPTION	CROSS HEAD SCREW
816-130002	CH 16 VTC	811-107003
816-130003	CH 22 VTC	811-107004
816-130004	CH 27 VTC	811-107005
816-130005	CH 32 VTC	811-107006
816-130006	CH 40 VTC	811-107007
816-130007	CH 50 VTC	811-107009

CLUTCH DRIVE RINGS FOR DIN 6358 COMBI SHELL MILL HOLDERS

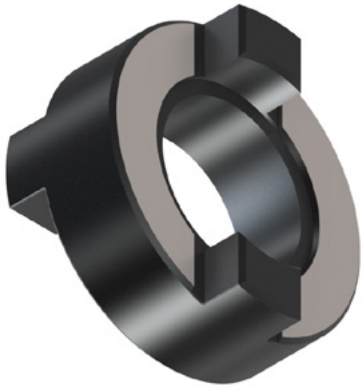

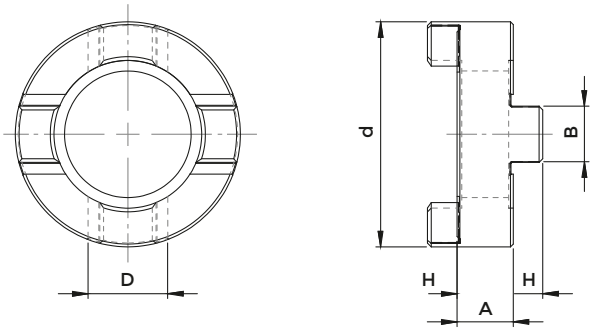

COD.	DESCRIPTION	D	d	H	B	A
814-30001	AT 16	16	32	5,0	10	8
814-30002	AT 22	22	40	5,6	12	10
814-30003	AT 27	27	48	6,3	12	12
814-30004	AT 32	32	58	7,0	14	14
814-30005	AT 40	40	70	8,0	14	16
4095	AT 50	50	90	9,0	16	18

DOWELS FOR FACE MILL HOLDERS

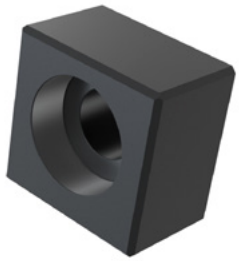

FIG. 1

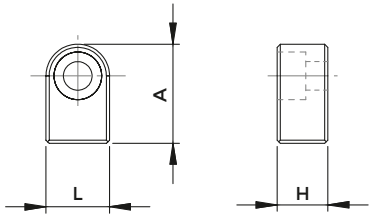

FIG. 2

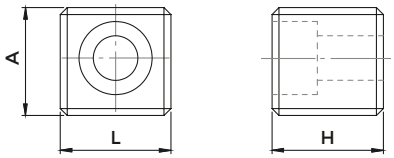

COD.	DESCRIPTION	H	L	A	FIG.	SCREW
814-20214	TPF - D. 16	7	8	13	1	811-101003
814-202280	TPF - D. 16	10,5	8	13	1	811-101004
814-202150	TPF - D. 22	8	10	15,6	1	811-101010
7070*	TPF - D. 22	10	10	18	1	811-101011
814-202250	TPF - D. 22	11,6	10	15,6	1	811-101011
814-202160	TPF - D. 27	9	12	18,3	1	811-101017
7071*	TPF - D. 27	12	12	18	1	811-101018
814-202270	TPF - D. 27	13,3	12	18,3	1	811-101018
814-202170	TPF - D. 32	11	14	21	1	811-101027
7072*	TPF - D. 32	14	14	22	1	811-101029
814-202290	TPF - D. 32	15	14	21	1	811-101029
814-202630	TPF - D. 32	20,5	14	21	1	811-101029
814-202180	TPF - D. 40	13	16	24	1	0207
814-202080	TPF - D. 40	16	15,9	15,5	2	0207
7073*	TPF - D. 40	16	15,9	19,5	2	0207
814-202710	TPF - D. 40	22,5	16	24	1	811-101029
814-202120	TPF - D. 60	25	25,4	28	2	811-101064

*Dowels for special exectuions

KEYS

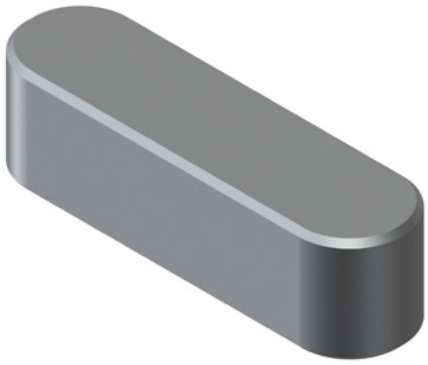

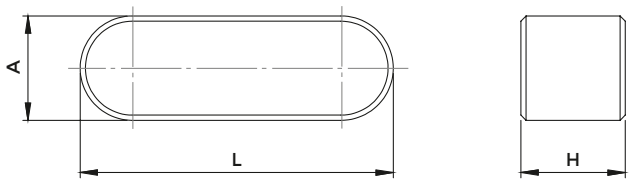

COD.	A	H	L
0103	3	3	10
0041	4	4	12
814-201010	4	4	20
0147	4	4	22
0258	5	4	18
814-20279	5	4	20
0044	6	6	15
814-20282	6	6	20
814-201020	6	6	25
0148	6	6	32

follows >>

COD.	A	H	L
0045	7	7	16
814-201030	7	7	25
0149	7	7	50
0047	8	7	16
814-20283	8	7	25
814-201040	8	7	28
0150	8	7	50
814-201050	10	8	32
0151	10	8	50
0137	12	8	36
0152	12	8	50

SPARES FOR MT ADAPTERS FOR MILLING CUTTERS DIN 228 FORM A SHANK TIE RODS FOR MILL

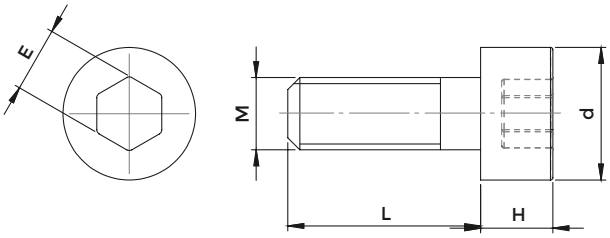

COD.	CM	M	L	d	H	E	STEP
7056*	CM 2	M 10	30	12,9	6,5	7	1,5
811-111007	CM2	M 10	30	13	10	8	1,5
7057*	CM 3	M 12	30	18	7	8	1,75
7402	CM 3	M 12	35	17	12	8	1,75
7403	CM 3	M 12	35	18	12	10	1,75
7058*	CM 3	M 12	40	18	7	8	1,75
7404	CM 4	M 16	40	20	16	10	2
7407	CM 4	M 16	40	21,5	16	14	2
811-401147	CM 4	M 16	45	21,5	9	12	2
7067*	CM 4	M 16	45	23	9	12	2
7069*	CM5	M 20	50	30	11	14	2,5
7408*	CM5	M 20	55	30	20	17	2,5

*Tie rods for special executions

SPARES FOR MT ADAPTERS FOR MILLING CUTTERS DIN 228 FORM A SHANK LEFT NUTS FOR TIE RODS

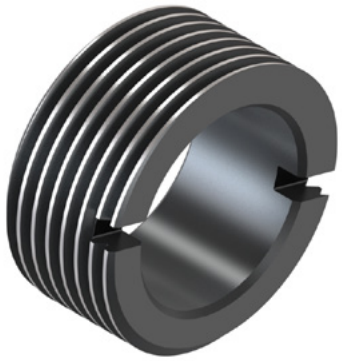

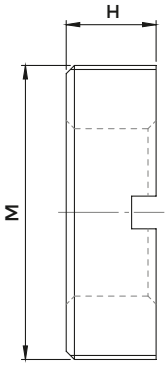

COD.	CM	M	H	WRENCH
811-302037	CM 1	M 10 x 1 SX	6	816-20204002
811-302031	CM 2	M 15 x 1,5 SX	6	816-20205002
811-302032	CM 3	M 20 x 1,5 SX	6	816-20206002
811-302036	CM 4	M 24 x 1,5 SX	8,5	816-20207002
811-302034	CM 5	M 36 x 2 SX	11	816-20208002

SPARES FOR MT ADAPTERS FOR MILLING CUTTERS DIN 228 FORM A SHANK WRENCHES FOR LEFT NUTS

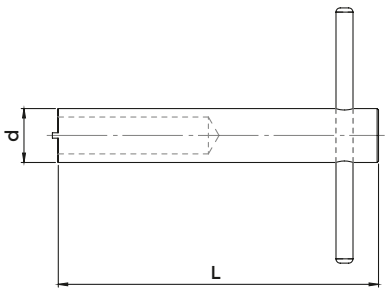

COD.	CM	d	L	NUT
816-20204002	CM 1	9,9	95	811-302037
816-20205002	CM 2	14,8	110	811-302031
816-20206002	CM 3	19,2	115	811-302032
816-20207002	CM 4	23	140	811-302036
816-20208002	CM 5	37	172	811-302034

SPARES FOR COMBI MT ADAPTERS: TWIST DRILLS + MILLING CUTTERS REDUCERS FOR TIE RODS

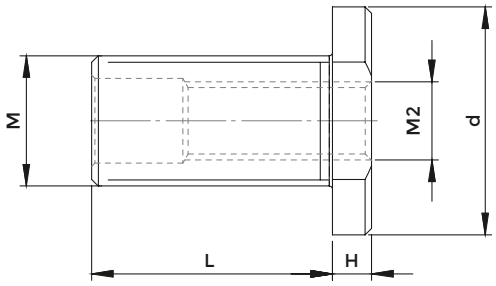

COD	CM	M	M2	L	H	d
811-302010	CM 2	M 10	M 6	19	3	14
811-302006	CM 3	M 12	M 6	25	3	19
0129	CM 4	M 16	M10	27	3	25
811-302008	CM 5	M 20	M12	37	6	35

*Tie rods for special executions

ROUND HEAD SCREWS

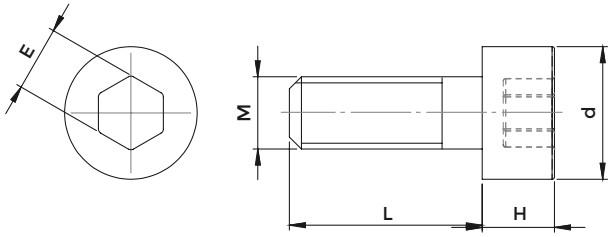

COD.	M	L	d	H	E	STEP
811-101003	M 3	8	5,5	3	2,5	0,5
811-101004	M 3	10	5,5	3	2,5	0,5
811-101010	M 4	10	7	4	3	0,7
811-101011	M 4	12	7	4	3	0,7
811-101017	M 5	12	8,5	5	4	0,8
811-101018	M 5	18	8,5	5	4	0,8
0484	M 6	10	10	6	5	1
811-101027	M 6	12	10	6	5	1
811-101028	M 6	14	10	6	5	1
0207	M 6	18	10	6	5	1
7447	M 6	20	8,5	4	4	1
811-101029	M 6	20	10	6	5	1
811-101030	M 6	25	10	6	5	1
0031	M 6	30	10	6	5	1
7400	M 6	35	10	6	5	1
7046	M 6	45	10	6	5	1
811-101077	M 6	55	10	6	5	1
7054	M 6	60	10	6	5	1
7047	M 6	75	10	6	5	1
0297	M 8	12	13	8	6	1,25
0491	M 8	16	13	8	6	1,25
0023	M 8	20	13	8	6	1,25
0586	M 8	30	10	8	6	1,25
0533	M 8	30	13	8	6	1,25
7056	M 10	30	12,9	6,5	7	1,5
811-111007	M 10	30	13	10	8	1,5
0120	M 10	30	16	10	8	1,5
7413	M 10	35	16	10	8	1,5
7048	M 10	40	12,9	6,5	8	1,5
7049	M 10	40	16	10	8	1,5
7401	M 10	45	13,5	10	8	1,5

follows >>

COD.	M	L	d	H	E	STEP
7050	M 10	45	16	6,5	7	1,5
7405	M 10	45	16	10	8	1,5
0056	M 10	50	16	10	8	1,5
7051	M 10	60	13,5	10	8	1,5
7052	M 10	60	16	10	8	1,5
811-101078	M 10	70	16	10	8	1,5
7053	M 10	90	16	10	8	1,5
811-101064	M 12	25	18	12	10	1,75
7057	M 12	30	18	7	8	1,75
811-101065	M 12	30	18	12	10	1,75
7402	M 12	35	17	12	8	1,75
7403	M 12	35	18	12	10	1,75
7058	M 12	40	18	7	8	1,75
7416	M 12	45	18	12	10	1,75
0177	M 12	50	18	12	10	1,75
7455	M 12	55	17	12	10	1,75
811-101070	M 12	55	18	12	10	1,75
811-101079	M 12	70	18	12	10	1,75
0055	M 12	85	18	12	10	1,75
7404	M 16	40	20	16	10	2
7407	M 16	40	21,5	16	14	2
7450	M 16	40	24	16	14	2
811-401147	M 16	45	21,5	9	12	2
7067	M 16	45	23	9	12	2
7409	M 16	60	20,5	16	14	2
811-401150	M 16	60	21,5	9	12	2
7451	M 16	60	24	16	14	2
0042	M 16	80	20,5	16	14	2
7069	M 20	50	30	11	14	2,5
7408	M 20	55	30	20	17	2,5
811-401151	M 24	60	36	13	17	3
811-401152	M 24	90	36	13	17	3

LOCKING SCREWS FOR END MILL HOLDERS

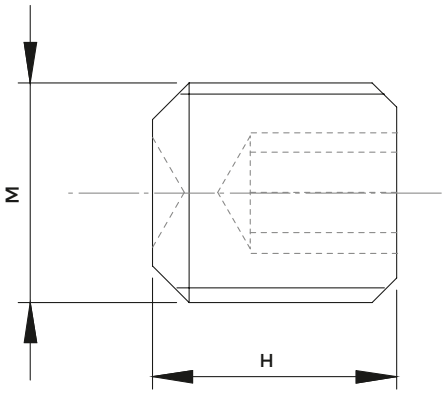

COD.	DESCRIPTION	F x H	STEP
811-106001	G - WE 6	M 6 x 10	1
811-106002	G - WE 8	M 8 x 10	1,25
811-106004	G - WE 10	M 10 x 12	1,5
811-106005	G - WE 12	M 12 x 16	1,75
811-106005	G - WE 14	M 12 x 16	1,75
811-106006	G - WE 16	M 14 x 16	2
811-106006	G - WE 18	M 14 x 16	2
811-106007	G - WE 20	M 16 x 16	2
811-106008	G - WE 25	M 18 x 2 x 20	2
811-106009	G - WE 32	M 20 x 2 x 20	2
811-106009	G - WE 40	M 20 x 2 x 20	2
4978	G - WE 50	M 24 x 2 x 20	2

SETTING AND LOCKING SCREWS

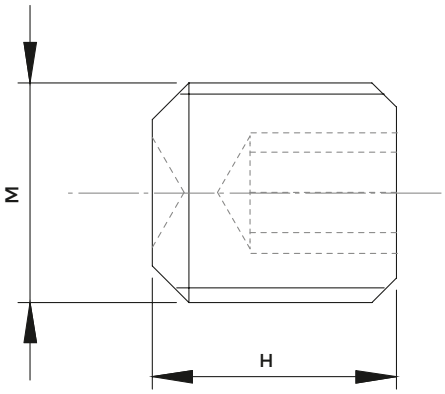

COD.	DESCRIPTION	STEP
0011	M 4 x 4	0,7
0380	M 4 x 8	0,7
811-102113	M 4 x 14	0,7
0017	M 5 x 4	0,8
811-102009	M 5 x 5	0,8
0365	M 5 x 6	0,8
0366	M 5 x 10	0,8
0285	M 5 x 30	0,8
0388	M 5 x 40	0,8
0367	M 6 x 4	1
0368	M 6 x 5	1
811-106015	M 6 x 6	1
0370	M 6 x 8	1
811-106001	M 6 x 10	1
811-102020	M 6 x 12	1
811-102114	M 6 x 14	1
811-102021	M 6 x 16	1
0253	M 6 x 40	1
811-106036	M 8 x 6	1,25
811-102026	M 8 x 8	1,25
811-106002	M 8 x 10	1,25
811-102028	M 8 x 12	1,25
811-102029	M 8 x 16	1,25
811-102030	M 8 x 20	1,25
811-102034	M 8 x 40	1,25
0409	M 10 x 1 x10	1
811-402003	M 10 x 1 x12	1
0385	M 10 x 8	1,5

follows >>

COD.	DESCRIPTION	STEP
811-106003	M 10 x 10	1,5
811-106004	M 10 x 12	1,5
811-102037	M 10 x 16	1,5
811-102038	M 10 x 20	1,5
811-402005	M 12 x 1 x12	1
811-106013	M 12 x 10	1,75
811-102064	M 12 x 12	1,75
811-102069	M 12 x 14	1,75
811-106005	M 12 x 16	1,75
811-102046	M 12 x 30	1,75
0074	M 14 x 1 x 6	1
0401	M 14 x1,5 x 16	1,5
811-106026	M 14 x 10	2
811-106027	M 14 x 12	2
0068	M 14 x 14	2
811-106006	M 14 x 16	2
811-402007	M 16 x 1 x12	1
0420	M 16 x 1 x16	1
0404	M 16 x1,5 x 12	1,5
0073	M 16 x 10	2
811-106032	M 16 x 12	2
0400	M 16 x 14	2
811-106007	M 16 x 16	2
811-106014	M 18 x 2 x12	2
811-106042	M 18 x 2 x17	2
811-106008	M 18 x 2 x 20	2
0259	M 20 x 2 x 17	2
811-106009	M 20 x 2 x 20	2
4978	M 24 x 2 x 20	2

SETTING AND LOCKING SCREWS WITH TROUGH HOLE

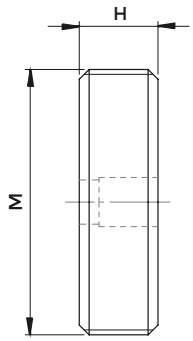

COD.	DESCRIPTION	STEP
0190	M 18 x1,5 x 8	1,5
811-303118	M 22 x1,5 x 8	1,5
0195	M 27 x1,5 x 8	1,5

LOCKING SCREWS WITH TROUGH HOLE WITH TROUGH HOLE

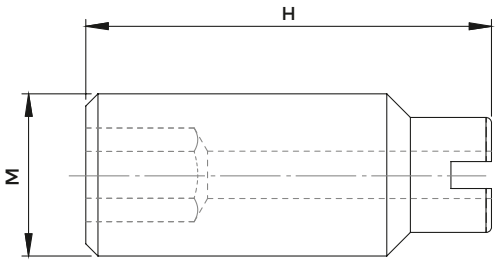

COD.	DESCRIPTION	STEP
811-303043	M 5 x 16	0,8
811-303081	M 6 x 16	1
811-303082	M 8 x 20	1,25
811-303083	M 10 x 25	1,5

follows >>

COD.	DESCRIPTION	STEP
811-303084	M 12 x 30	1,75
1226	M 16 x 20	2
0212	M 20 x 20	2,5
0247	M 20 x 30	2,5

LOCKING SCREWS WITH TAPER TIP

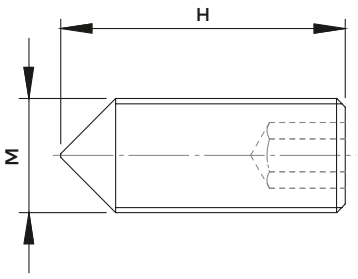

COD.	DESCRIPTION	STEP
0510	M 4 x 4	0,7
0015	M 4 x 14	0,7
0513	M 5 x 5	0,8
0529	M 5 x 6	0,8

follows >>

COD.	DESCRIPTION	STEP
0016	M 5 x 10	0,8
0036	M 5 x 16	0,8
0531	M 6 x 6	1
0557	M 6 x 10	1
0037	M 8 x 8	1,25

ETS COLLETS

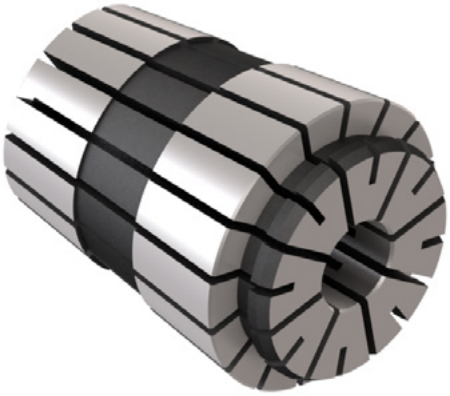

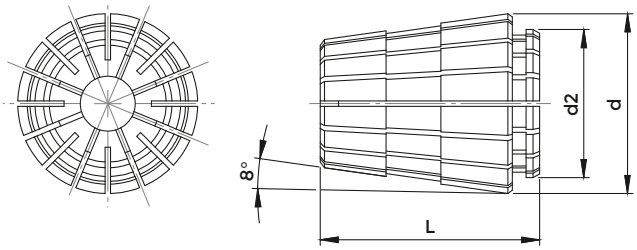

ETS

COD.	DESCRIPTION	RANGE	CLAMPING	STEP	d	d2	L	EINHEITS
5200	ETS 16	1 ÷ 3 3 ÷ 10	mm 0,5 mm 1,0	0,5	17	13,6	24	4018E
5201	ETS 20	2 ÷ 3 3 ÷ 13	mm 0,5 mm 1,0	0,5	21	17	30,5	4272E
5202	ETS 25	2 ÷ 3 3 ÷ 16	mm 0,5 mm 1,0	0,5	26	21	34	4280E
5203	ETS 32	3 ÷ 20	mm 1,0	0,5	33	27,2	40	4534E
5204	ETS 40	3 ÷ 26	mm 1,0	0,5	41	32	46	4768E

ETS collets are interchangeable with ER collets (DIN 6499 - ISO 15488) thanks to the same 8° rear taper.
To fit them in a standard ER collet chuck, a nut replacement is needed because of the difference in fore part of the collet.

CHARACTERISTICS:

- System with high precision
- An excellent yeld in high speed

	COD.	N° OF SEATS	COLLET
PLASTIC EMPTY TRAY	3674	16	ETS 16
	3675	16	ETS 20
	3676	20	ETS 25
	3677	20	ETS 32
	3678	28	ETS 40

	COD.	N° OF SEATS	COLLET
WOODEN EMPTY BOX	3976	12	ETS 16
	3977	12	ETS 20
	3978	15	ETS 25
	3979	18	ETS 32
	3980	24	ETS 40

STANDARD CLAMPING NUTS FOR ETS COLLETS

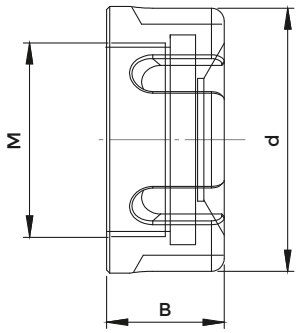

STANDARD CLAMPING NUTS FOR ETS COLLETS
Standard nuts for ETS collets have the same thread than ER Standard nuts; this makes interchangeable those two systems

ETS

COD.	DESCRIPTION	A	B	C	COLLET	WRENCH
5294	GS 16 ETS	32	15	22 x 1,5	5200	3698
5295	GS 20 ETS	35	16,5	25 x 1,5	5201	3699
5296	GS 25 ETS	42	18,5	32 x 1,5	5202	3669
5297	GS 32 ETS	50	22	40 x 1,5	5203	3670
5298	GS 40 ETS	63	25	50 x 1,5	5204	3671

EOC COLLETS

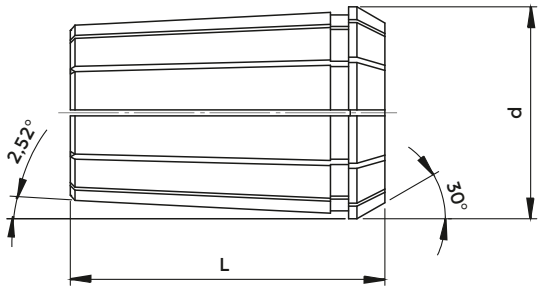

DIN 6388

COD.	DESCRIPTION	RANGE	STEP	d	L	EINHEITS
0578	EOC 6	1 ÷ 6	0,5	11,5	21	400E
0624	EOC 8	1 ÷ 8	0,5	14,5	26	401E
0633	EOC 10	1 ÷ 10	0,5	17,2	30	404E
0645	EOC 12	1 ÷ 12	0,5	19,8	34	407E
0768	EOC 16	2 ÷ 16	0,5	25,5	40	415E
0783	EOC 20	2 ÷ 20	0,5	29,8	45	4541E
0769	EOC 25	2 ÷ 25	0,5	35,05	52	462E
0770	EOC 32	3 ÷ 32	0,5	43,7	60	467E
0802	EOC 40	8 ÷ 40	1	52,2	68	468E

REDUCED SET OF EOC COLLETS

	COD.	DESCRIPTION	DIAMETERS	N° OF COLLETS
IN SINGLE PACKS	7010	EOC 16 Reduced	Ø 4 - 6 - 8 - 10 - 12 - 16	6
	7011	EOC 25 Reduced	Ø 6 - 8 - 10 - 12 - 16 - 20 - 25	7
	7012	EOC 32 Reduced	Ø 6 - 8 - 10 - 12 - 16 - 20 - 25 - 32	8
IN CASE	7016	EOC 16 Reduced	Ø 4 - 6 - 8 - 10 - 12 - 16	6
	7017	EOC 25 Reduced	Ø 6 - 8 - 10 - 12 - 16 - 20 - 25	7
	7018	EOC 32 Reduced	Ø 6 - 8 - 10 - 12 - 16 - 20 - 25 - 32	8

COMPLETE SET OF EOC COLLETS

	COD.	DESCRIPTION	DIAMETERS	N° OF COLLETS
IN SINGLE PACKS	7013	EOC 16 Completa	da Ø 2 a Ø 16	15
	7014	EOC 25 Completa	da Ø 2 a Ø 25	24
	7015	EOC 32 Completa	da Ø 4 a Ø 32	29
IN CASE	7019	EOC 16 Completa	da Ø 2 a Ø 16	15
	7020	EOC 25 Completa	da Ø 2 a Ø 25	24
	7021	EOC 32 Completa	da Ø 4 a Ø 32	29

SEALED EOC COLLETS

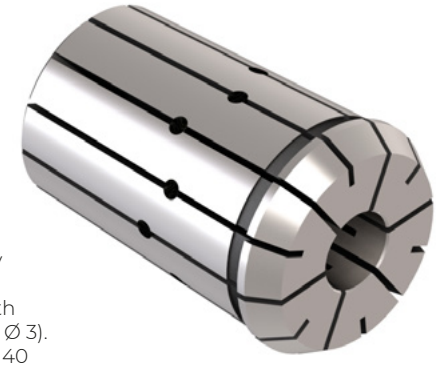

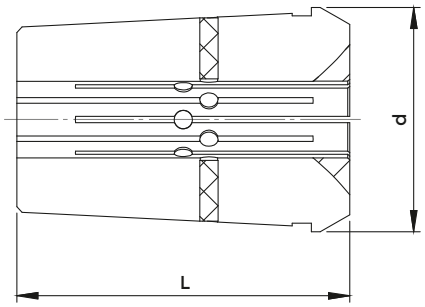

Coolant flows exclusively through central hole, collet cuts are sealed with neoprene inserts (above Ø 3). Working pressure: up to 40 Bar / 600 PSI

DIN 6388

COD.	DESCRIPTION	RANGE	STEP	d	L
0768 RF	EOC 16 RF	3 ÷ 16	0,5	25,5	40
0769 RF	EOC 25 RF	3 ÷ 25	0,5	35,05	52
0770 RF	EOC 32 RF	4 ÷ 32	1	44	60

CLAMPING NUTS FOR EOC COLLETS

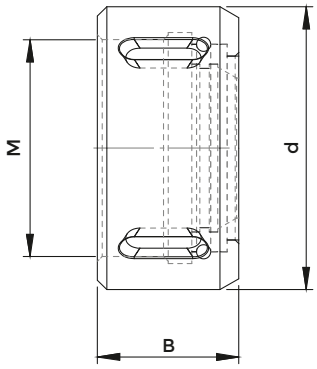

DIN 6388

COD.	DESCRIPTION	d	B	M	COLLET	WRENCH
8641	GOC 6	18	14	14 x 1,0	0578	2880
8642	GOC 8	26	19	20 x 1,5	0624	2820
8643	GOC 10	30	19	22 x 1,5	0633	2881
8644	GOC 12	35	20	27 x 1,5	0645	2882
4067	GOC 16	43	24	33 x 1,5	0768	2883
4008	GOC 20	50	28	42 x 2,0	0783	2908
4068	GOC 25	60	30	48 x 2,0	0769	2909
4069	GOC 32	72	33,5	60 x 2,5	0770	2910
8645	GOC 40	85	37	68 x 2,5	0802	2836

COLLETS FOR HIGH GRIP DEVICES

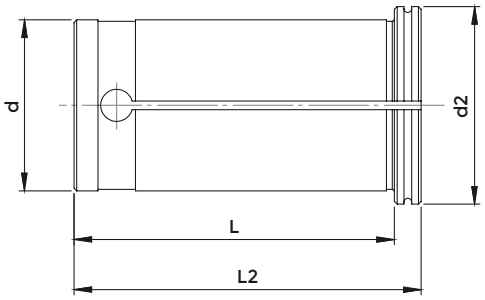

PC

COD.	DESCRIPTION	RANGE	STEP	d	d2	L	L2
0804	PC 12	3 ÷ 8 OVERSIZE 9 ÷ 10	1,0	12	19	45,5	44,5
0805	PC 16	3 ÷ 12	1,0	16	19	46	50
K20D..	PC 20	3 ÷ 16 OVERSIZE 17 ÷ 18	1,0	20	25	49	52,5
K25D..	PC 25	3 ÷ 20 OVERSIZE 21 ÷ 22	1,0	25	31	55	60
K32D..	PC 32	3 ÷ 25 OVERSIZE 26 ÷ 30	1,0	32	37,5	59,5	64,5

REDUCED SET OF PC COLLETS

	COD.	DESCRIPTION	DIAMETERS	N° OF COLLETS
IN SINGLE PACKS	7680	PC 20 Reduced	Ø 6 - 8 - 10 - 12 - 16	5
	7681	PC 25 Reduced	Ø 6 - 8 - 10 - 12 - 16 - 20	6
	7682	PC 32 Reduced	Ø 6 - 8 - 10 - 12 - 16 - 20 - 25	7
IN CASE	7683	PC 20 Reduced	Ø 6 - 8 - 10 - 12 - 16	5
	7684	PC 25 Reduced	Ø 6 - 8 - 10 - 12 - 16 - 20	6
	7685	PC 32 Reduced	Ø 6 - 8 - 10 - 12 - 16 - 20 - 25	7

ULTRA PRECISION COLLETS FOR HIGH GRIP DEVICES

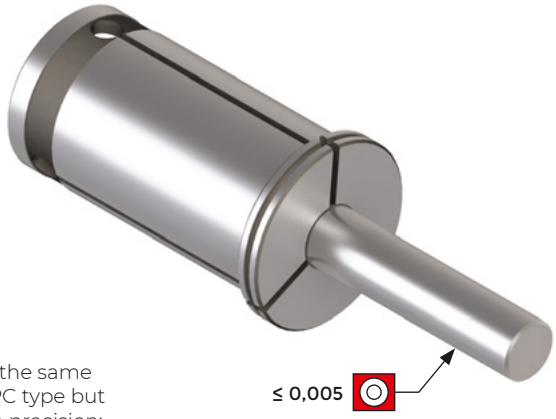

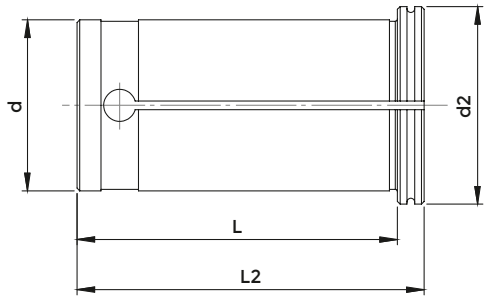

Collets with the same features of PC type but with an high precision: ≤ 0,005 runout accuracy.

PC-UP

COD.	DESCRIPTION	RANGE	STEP	d	d2	L	L2
0809 UP	PC 20 UP	3 ÷ 16	1	20	25	49	52,5
0820 UP	PC 25 UP	3 ÷ 20	1	25	31	55	60
0810 UP	PC 32 UP	3 ÷ 25	1	32	37,5	59,5	64,5

REDUCED SET OF PC-UP COLLETS

	COD.	DESCRIPTION	DIAMETERS	N° OF COLLETS
IN SINGLE PACKS	7036	PC 20 UP Reduced	Ø 6 - 8 - 10 - 12 - 16	5
	7037	PC 25 UP Reduced	Ø 6 - 8 -10 - 12 - 16 - 20	6
	7038	PC 32 UP Reduced	Ø 6 - 8 - 10 -12 - 16 - 20 - 25	7
IN CASE	7039	PC 20 UP Reduced	Ø 6 - 8 - 10 - 12 - 16	5
	7040	PC 25 UP Reduced	Ø 6 - 8 - 10 - 12 - 16 - 20	6
	7041	PC 32 UP Reduced	Ø 6 - 8 - 10 - 12 - 16 - 20 - 25	7

SEALED COLLETS FOR HYDRAULIC CHUCKS

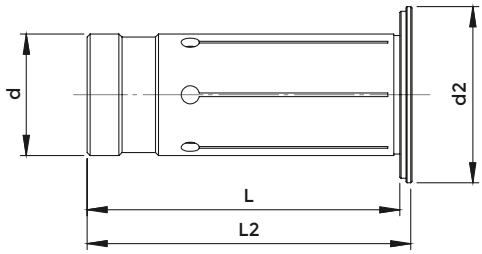

OVERSIZE diameters, for the construction characteristics, do not allow the use at high pressures. Working pressure: up to 70 Bar / 1020 PSI

PH

COD.	DESCRIPTION	RANGE	STEP	d	d2	L	L2
OGX12D..	PH 12	2,5 ÷ 8 OVERSIZE 9 ÷ 10	1	12	16,5	45	47
OGX20D..	PH 20	3 ÷ 16 OVERSIZE 17 ÷ 18	1	20	24	50,5	52,5
0676	PH 25	6 ÷ 20 OVERSIZE 21 ÷ 22	1	25	29	54,5	56,5
OGX32D..	PH 32	6 ÷ 25 OVERSIZE 26 ÷ 28	1	32	35,5	60,5	62,5

REDUCED SET OF PH COLLETS

	COD.	DESCRIPTION	DIAMETERS	N° OF COLLETS
IN SINGLE PACKS	7700	PH 20 Reduced	Ø 6 - 8 - 10 - 12 - 16	5
	7701	PH 25 Reduced	Ø 6 - 8 - 10 - 12 - 16 - 20	6
	7702	PH 32 Reduced	Ø 6 - 8 - 10 - 12 - 16 - 20 - 25	7
IN CASE	7703	PH 20 Reduced	Ø 6 - 8 - 10 - 12 - 16	5
	7705	PH 25 Reduced	Ø 6 - 8 - 10 - 12 - 16 - 20	6
	7706	PH 32 Reduced	Ø 6 - 8 - 10 - 12 - 16 - 20 - 25	7

DA COLLETS

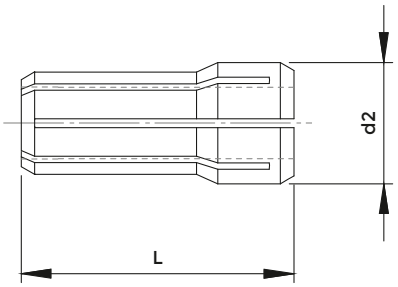

DA

COD.	DESCRIPTION	d	L	RANGE	CLAMPING	EINHEITS
5118	DA 300	9,5	25,4	1 ÷ 6,5	mm 0,5	416E
5119	DA 200	13,6	30,3	1 ÷ 10,0	mm 0,5	417E
5120	DA 100	19,4	36,7	1 ÷ 15,0	mm 0,5	418E
5121	DA 180	26,2	41,6	2 ÷ 20,0	mm 0,5	419E

TG COLLETS

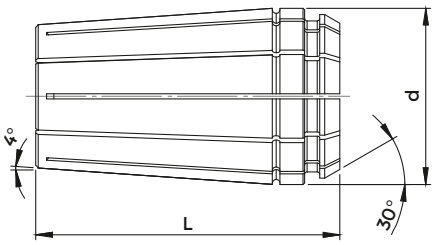

TG

COD.	DESCRIPTION	d	L	RANGE	CLAMPING	EINHEITS
1250	TG 75	27,0	46,9	2 ÷ 16	mm 0,5	420E
1251	TG 100	35,0	60,4	3 ÷ 25	mm 0,5	464E
1252	TG 150	50,8	76,2	10 ÷ 38	mm 0,5	466E

BAKUER COLLETS

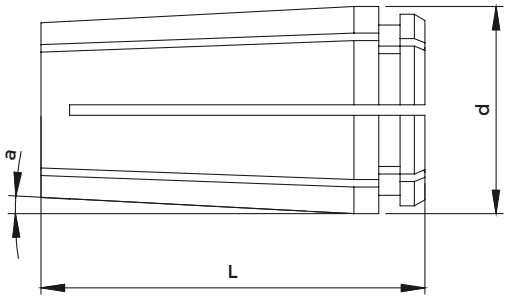

COD.	RANGE	d	L	a
0736	4,0 ÷ 16,0	25,6	48	3°
0737	6,0 ÷ 20,0	29,6	54	3°
0738	8,0 ÷ 25,0	35,7	60	3°

443E COLLETS

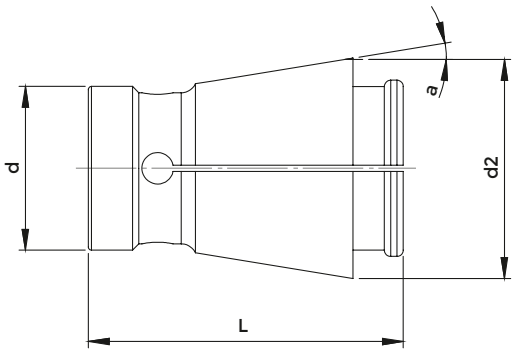

COD.	RANGE	d	d2	L	a	EINHEITS
0772	3,0 ÷ 20	26	35	50	9° 15'	443E

BRIDGEPORT R8 COLLETS

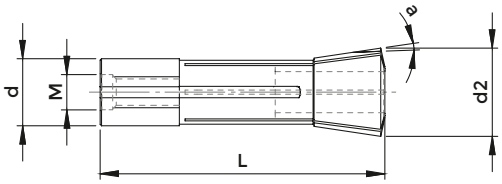

COD.	RANGE	d	d2	L	a	M	EINHEITS
0716	2,0 ÷ 22	24,12	32	106	8° 35'	7/16 - 20"	369E

DIN 6343 COLLETS - ROUND BORE EXECUTIONS

GROOVED INSIDE ROUND COLLET starting from ø 8 mm

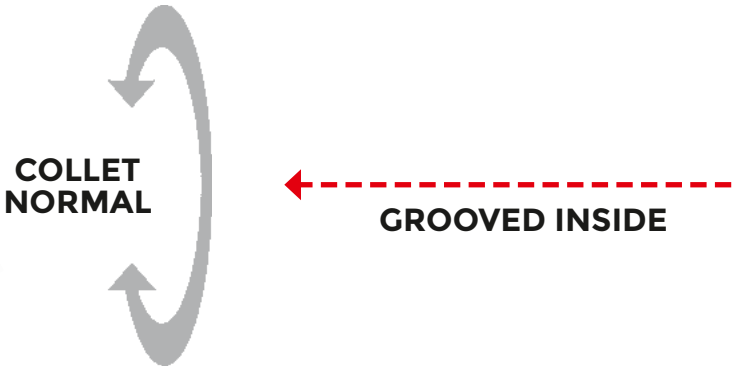

CHARACTERISTIC:

- Drilling Axial seal

Example for Order: 173E Grooved = Art. 0709

SERRATED INSIDE ROUND COLLET starting from ø 8 mm

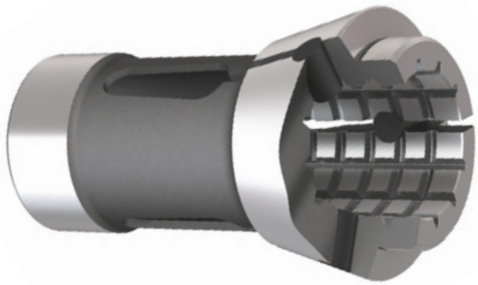

CHARACTERISTIC:

- Drilling Axial seal + rotatory seal as twisting moment

Example for Order: 173E Serrated = Art. 0709 **S**

SMOOTH INSIDE ROUND COLLET all the diameters

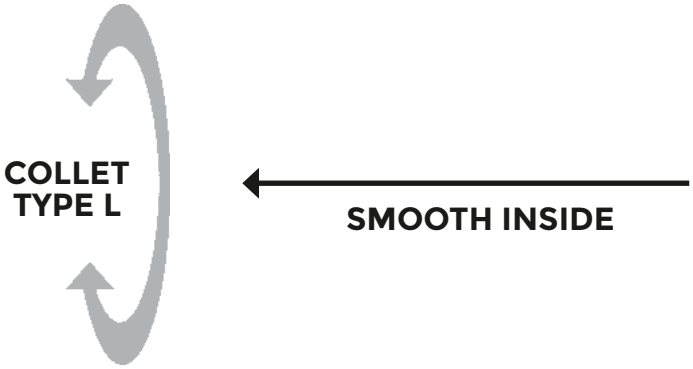

CHARACTERISTIC:

- Suitable to lock finished diameter, doesn't engrave material surface

Example for Order: 173E Smooth = Art. 0709 **L**

SINGLE CONE CLAMPING COLLETS

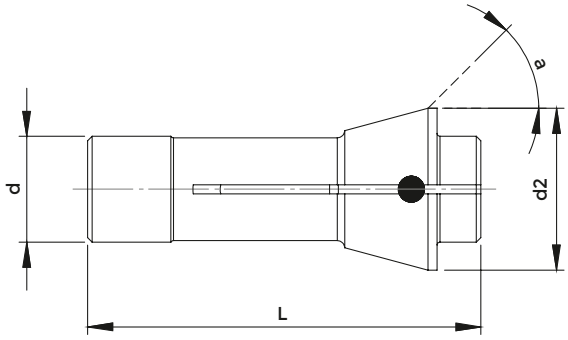

DIN 6343

COD. ●	COD. ⬢	COD. ■	d	d2	L	a	MAX ●	MAX ⬢	MAX ■	EINHEITS
0721	-	-	8	12	42	16°	6,5	-	-	101E
0725	0949	5000	10	15,5	47,5	20°	8,0	6,0	5,0	109E
0940	0941	0943	13	19	64	16°	10,0	8,0	7,0	116E
0740	0741	0742	14	18	46	13°	10,0	9,0	8,0	117E
0722	0723	0724	15	21	64	16°	12,0	10,0	9,0	120E
0954	0955	0956	20	26	54	15°	16,0	12,0	10,0	136E
5299	5300	5301	20	27,5	60	15°	17,0	15,0	12,0	1299E
0937	0938	0939	20	28	67	16°	16,0	14,0	11,0	138E
0705	0707	0706	22	30	55	15°	18,0	14,0	12,0	140E
0717	0719	0718	25	35	77	16°	20,0	17,0	15,0	145E
0901	0902	0903	27	38	72,7	15°	22,0	20,0	16,0	147E
0713	0715	0714	28	38	70	15°	23,0	20,0	17,0	148E
0931	0932	0933	30	38	65	15°	26,0	22,0	18,0	1446E
0727	0728	0729	30	42	80	16°	25,0	23,0	19,0	157E
0701	0703	0702	32	45	75	15°	26,0	24,0	20,0	161E
0615	0616	0617	35	43	70	15°	25,0	24,0	20,0	162E
0764	0766	0765	35	48	80	15°	30,0	27,0	22,0	163E
0970	0972	0973	37	47	92	16°	32,0	27,0	22,0	1536E
0837	0839	0838	38	50,3	86	15°	32,0	28,0	25,0	-
0919	0920	0921	38,1	49	107,5	15°	32,0	27,0	22,0	164E
0861	0862	0863	42	55	94	15°	37,0	32,0	26,0	171E
0709	0711	0710	48	60	94	15°	42,0	38,0	30,0	173E
2424	2425	2426	58	70	94	15°	52,0	45,0	36,0	177E
0759	0760	0761	66	84	110	15°	60,0	52,0	42,0	185E

For round collets, the article refers to the execution with grooved inside. For the smooth inside add the letter L ,
for the serrated inside add the letter S. See previous page

ACCESSORIES

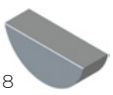

Art. 0018 Woodruff key mm 5x6,5

EMERGENCY COLLETS

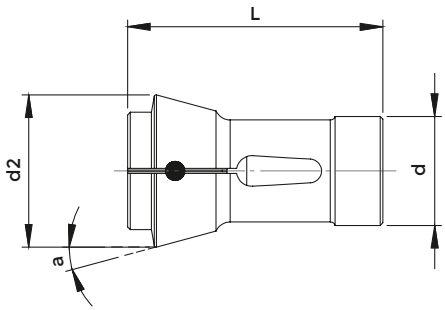

DIN 6343

COD.	d	d2	L	a	EINHEITS
0717EC	25	35	77	16°	145E
0701EC	32	45	75	15°	161E
0970EC	37	47	92	16°	1536E
0709EC	48	60	94	15°	173E
2424EC	58	70	94	15°	177E
0759EC	66	84	110	15°	185E

Emergency collets can be finished by the customer
with the diameter or the desired shape thanks to the workable front.
The supply includes the register pins useful for positioning in the spindle.

DOUBLE CONE CLAMPING COLLETS

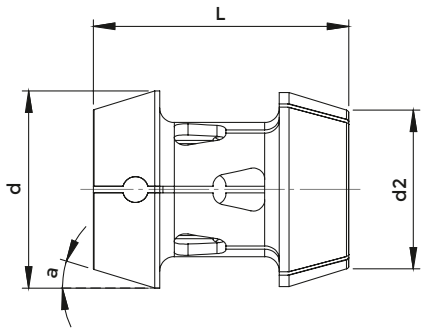

DIN 6343

COD. ●	COD. ⬢	COD. ■	d	L	d2	a	MAX ●	MAX ⬢	MAX ■
0739	0757	0758	60,0	80	49,0	17°	45	38	30
0756	0762	0763	71,6	100	60,0	17°	55	46	38
0927	0928	5053	91,0	100	80,0	17°	70	60	50
0892	0894	0899	108,0	105	95,0	17°	80	68	56

ACCESSORIES

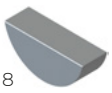

Art. 0018 Woodruff key mm 5x6,5

DRAWN BACK COLLETS WITH EXTERNAL THREAD

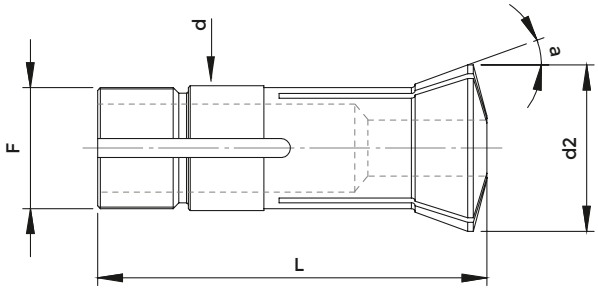

DIN 6343

COD. ●	COD. ⬢	COD. ■	d	d2	L	a	F	MAX ●	W	EINHEITS
0948	-	-	12,0	16,0	46	15°	11,75 x 1,25 45/5°	10	W 12	318E
0750	-	-	15,0	21,5	55,00	20°	M 13 x 1,00	13	-	324E
0800	-	-	20,0	26,3	73,00	15°	19,70 x 1,66 45/5°	20	W 20	349E
0966	-	-	20,0	28,00	122,00	17° 30'	19,70 x 2,00 45/5°	20	-	355E
0751	-	-	25,0	33,5	88,00	16°	M 23 x 1,00	22	-	363E
0674	-	-	25,0	33,7	97,6	15°	24,70 x 15 f " 45/5°	25	W 25	364E
5522	5530	5580	31,75	37,3	87	10° 03'	31,40 x 20 f " 60°	26	W 31,75	385E

DRAWBACK COLLETS WITH EXTERNAL AND INTERNAL THREAD

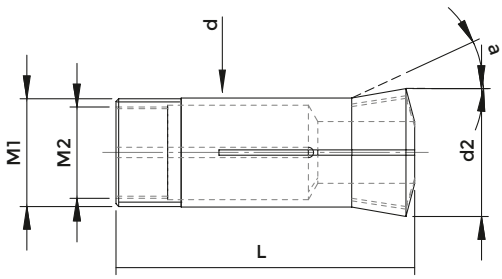

5C

COD. ●	DESCRIPTION	d	d2	L	a	M1	M2	MAX ●
5523	5C	31,75	37,3	87	10°03'	31,4 x 20 f " 60°	26,59 x 24 f "	26

CLAMPING SLEEVES FOR CUCCHI BAR-FEEDERS

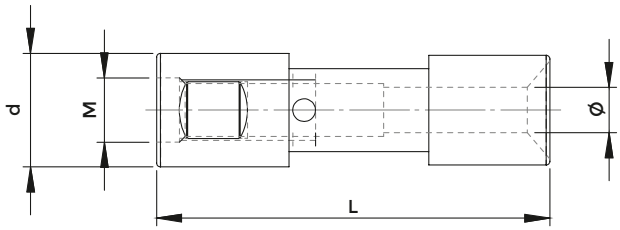

COD. ●	d	L	MIN ●	MAX ●	M RIGHT
0591	20,0	59	3	18,0	M 10 x 1 DX
0591	22,0	59	19	20,0	M 10 x 1 DX
0904	40,0	70	6	37,0	M 25 x 1,5 DX
0904	42,0	70	38	39,0	M 25 x 1,5 DX
0935	46,0	72	37	42,0	M 25 x 1,5 DX
0945	60,0	80	30	55,0	M 25 x 1,5 DX
0708	65,0	80	55	60,0	M 25 x 1,5 DX
0708	69,5	80	61	65,0	M 25 x 1,5 DX
0708	75,0	80	66	70,0	M 25 x 1,5 DX

COD. ●	d	L	MIN ●	MAX ●	M LEFT
0607	19,0	60	4	16,0	M 10 x 1 SX
0607	20,0	60	17	18,0	M 10 x 1 SX
0653	37,0	70	10	34,0	M 25 x 1,5 SX
0653	39,0	70	35	36,0	M 25 x 1,5 SX
0653	41,0	70	37	39,0	M 25 x 1,5 SX
0654	47,0	70	14	43,0	M 30 x 1,5 SX
0654	49,0	70	44	45,0	M 30 x 1,5 SX

CLAMPING SLEEVES FOR IEMCA BAR-FEEDERS

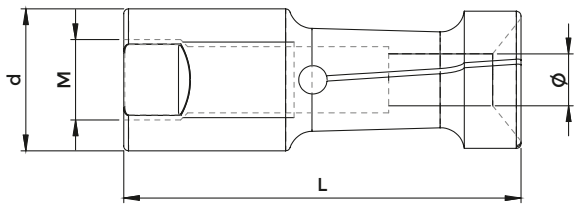

COD.	d	L	MIN	MAX	M RIGHT
0594	7,5	40	2	6,5	M 5 x 0,5 DX
0897	10,0	40	2	8,5	M 6 x 0,75 DX
0593	12,0	42	2	10,5	M 7 x 0,75 DX
0592	15,0	42	2	13,5	M 8 x 1 DX
0591	20,0	59	3	18,0	M 10 x 1 DX
0591	22,0	59	19	20,0	M 10 x 1 DX
0891	25,0	59	4	23,0	M 10 x 1 DX
0823	30,0	65	8	28,0	M 10 x 1 DX
0823	32,0	65	29	30,0	M 10 x 1 DX
0904	40,0	70	6	37,0	M 25 x 1,5 DX
0904	42,0	70	38	39,0	M 25 x 1,5 DX
0935	46,0	72	37	42,0	M 25 x 1,5 DX
0945	60,0	80	30	55,0	M 25 x 1,5 DX
0708	65,0	80	55	60,0	M 25 x 1,5 DX
0708	69,5	80	61	65,0	M 25 x 1,5 DX
0708	75,0	80	66	70,0	M 25 x 1,5 DX

NIPLEX REDUCTIONS FOR IEMCA BAR-FEEDERS

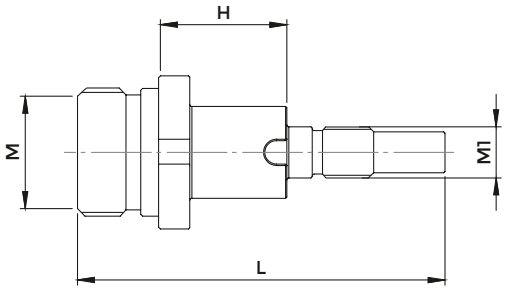

COD.	L	H	M RIGHT	M1 RIGHT
1260	72	26	M 25 x 1,5 DX	M 10 x 1 DX

CLAMPING SLEEVES FOR TOP AUTOMAZIONI BAR-FEEDERS

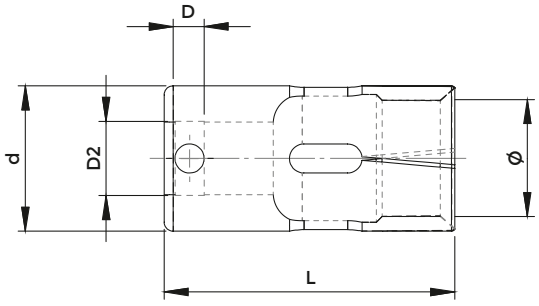

COD.	d	L	MIN	MAX	D	D2
9700	18	80	4	13	5	14
9701	20	80	5	17	5	14
9702	25	80	15	22	5	14
9703	30	80	20	28	8	20
9704	35	80	26	30	8	20
9705	40	80	30	38	8	20
9706	45	80	35	42	8	20
9707	50	80	40	47	8	20
9708	55	80	45	52	8	20
9709	60	80	30	55	8	20
9710	65	80	55	60	8	20
9711	70	80	61	65	8	20
9712	75	80	66	70	8	20
9713	75	80	66	70	8	30
9714	80	80	71	75	8	30
9715	85	95	76	80	8	35
9716	90	95	81	85	8	35
9717	95	95	86	90	8	35
9718	100	95	91	95	8	35

VULKOLLAN WORKABLE EMERGENCY CLAMPING SLEEVES FOR TOP AUTOMAZIONI BAR-FEEDERS

Workable emergency collets can be finished by the customer with the desired diameter thanks to the VULKOLLAN inner part.

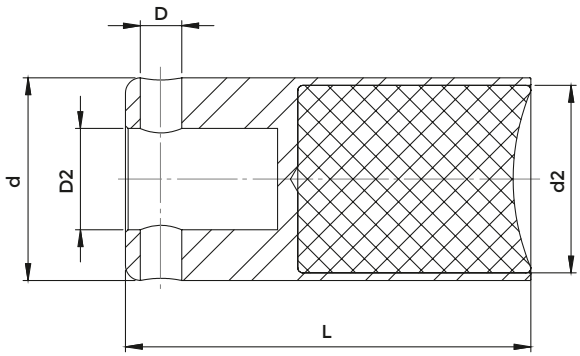

COD.	d	d2	L	D	D2
9502	14,9	12,9	80	5	10
9503	19	17	80	5	14
9504	24	22	80	5	20
9504	29	27	80	8	20
9504	31	29	80	8	20
9504	34	32	80	8	20
9504	35	33	80	8	20
9504	37	35	80	8	20
9504	39	37	80	8	20
9504	41	39	80	8	20
9504	44	42	80	8	20
9504	49	47	80	8	20
9504	51	49	80	8	20
9504	54	52	80	8	20
9504	59	57	80	8	20
9504	61	59	80	8	20
9504	64	62	80	8	20
9504	69	67	80	8	20
9505	71	69	80	8	30
9505	74	72	80	8	30
9505	79	77	80	8	30
9505	81	79	80	8	30
9505	84	82	80	8	30
9505	89	87	80	8	30
9505	94	92	80	8	30
9505	99	97	80	8	30
9505	109	107	80	8	30

CLAMPING SLEEVES TOP AUTOMAZIONI BAR-FEEDERS FOR SLIDING HEADSTOCK LATHES

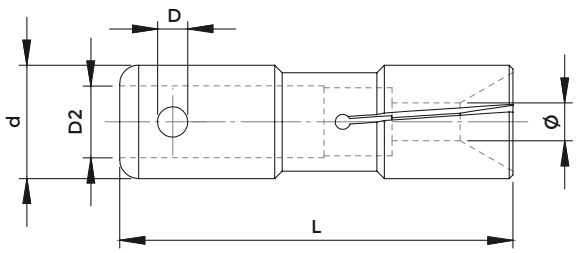

COD. ●	d	L	MAX ●	D	D2
9522	15	52	3 ÷ 13	5	10
9522	18	52	14 ÷ 16	5	10
9523	20	52	17 ÷ 18	5	14
9523	22	52	19	5	14
9523	23	52	20	5	14
9523	25	52	21 ÷ 22	5	14
9523	27	52	23	5	14
9523	28	52	24	5	14
9523	29	52	25	5	14
9523	30	52	26	5	14

NIPLEX FOR TOP AUTOMAZIONI BAR-FEEDERS

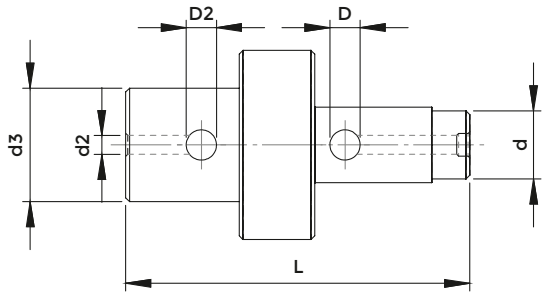

COD.	d	d2	d3	D	D2	L
9506	10	14	18	5	5	79
9507	14	14	19	5	5	79
9508	14	20	30	5	8	91
9509	14	25	35	5	8	91
9510	14	30	50	5	8	91
9511	20	20	30	8	8	91
9512	20	25	35	8	8	91
9513	20	30	50	8	8	91
9514	30	30	50	8	8	91
9524	35	30	70	8	8	81

COLLET LOCKING PINS

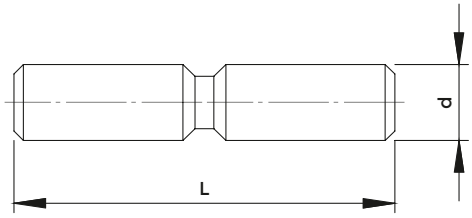

COD.	d	d2
9515	5	15
9516	5	19
9517	5	24
9525	5	27
9526	5	35
9518	8	30
9519	8	40
9520	8	45
9521	8	60

CLAMPING SLEEVES FOR OTHER BAR-FEEDERS

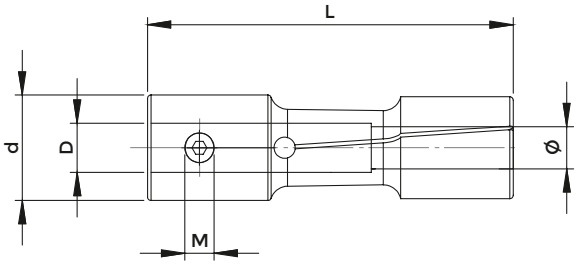

COD. ●	d	L	D	MIN ●	MAX ●	M	EINHEITS
1644	42	90	20 - H7	6,00	39,0	M 8	-

UNIVERSAL REDUCTION SLEEVES WITHOUT STOP

FIG. 1

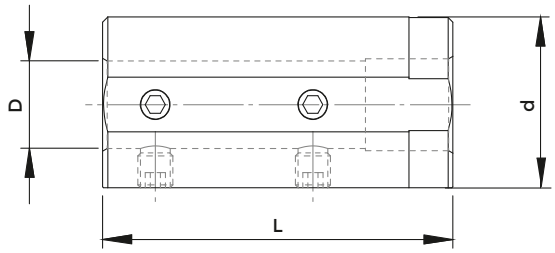

FIG. 2

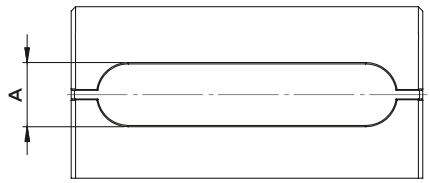

E 2.1 - E 2.2

COD.	DESCRIPTION	d	D	L	A	FIG.	SCREW
E2-1 20X06	E 2.1 - 20 x 6	20	6	60	-	1	0365
E2-1 20X8	E 2.1 - 20 x 8	20	8	60	-	1	0368
E2-1 20X10	E 2.1 - 20 x 10	20	10	60	-	1	0367
E2-1 20X12	E 2.1 - 20 x 12	20	12	60	-	1	0367
E2-1 25X06	E 2.1 - 25 x 6	25	6	60	-	1	0365
E2-1 25X8	E 2.1 - 25 x 8	25	8	60	-	1	811-106015
E2-1 25X10	E 2.1 - 25 x 10	25	10	60	-	1	811-106015
E2-1 25X12	E 2.1 - 25 x 12	25	12	60	-	1	0368
E2-1 25X14	E 2.1 - 25 x 14	25	14	60	-	1	0367
4318	E 2.2 - 25 x 16	25	16	60	9	2	-
E2-1 32X06	E 2.1 - 32 x 6	32	6	70	-	1	0366
E2-1 32X8	E 2.1 - 32 x 8	32	8	70	-	1	811-106001
E2-1 32X10	E 2.1 - 32 x 10	32	10	70	-	1	811-106001
E2-1 32X12	E 2.1 - 32 x 12	32	12	70	-	1	0370
E2-1 32X14	E 2.1 - 32 x 14	32	14	70	-	1	811-106015
E2-1 32X16	E 2.1 - 32 x 16	32	16	70	-	1	811-106015
2841	E 2.1 - 32 x 18	32	18	70	-	1	811-106015
E2-1 32X20	E 2.1 - 32 x 20	32	20	70	-	1	811-106036
E2-2 32X25	E 2.2 - 32 x 25	32	25	70	14	2	-
E2-1 40X06	E 2.1 - 40 x 6	40	6	80	-	1	0366
E2-1 40X08	E 2.1 - 40 x 8	40	8	80	-	1	811-102114
E2-1 40X10	E 2.1 - 40 x 10	40	10	80	-	1	811-102020
E2-1 40X12	E 2.1 - 40 x 12	40	12	80	-	1	811-102020
E2-1 40X14	E 2.1 - 40 x 14	40	14	80	-	1	811-102020
E2-1 40X16	E 2.1 - 40 x 16	40	16	80	-	1	811-106001
2847	E 2.1 - 40 x 18	40	18	80	-	1	811-106001
E2-1 40X20	E 2.1 - 40 x 20	40	20	80	-	1	811-102026
E2-1 40X25	E 2.1 - 40 x 25	40	25	80	-	1	811-106036
E2-2 40X32	E 2.2 - 40 x 32	40	32	80	14	2	-
E2-1 50X12	E 2.1 - 50 x 12	50	12	90	-	1	811-102114
7062	E 2.1 - 50 x 14	50	14	90	-	1	811-102114
E2-1 50X16	E 2.1 - 50 x 16	50	16	90	-	1	811-102028
2792	E 2.1 - 50 x 18	50	18	90	-	1	811-102028
E2-1 50X20	E 2.1 - 50 x 20	50	20	90	-	1	811-102028
E2-1 50X25	E 2.1 - 50 x 25	50	25	90	-	1	811-106002
E2-1 50X32	E 2.1 - 50 x 32	50	32	90	-	1	811-102026
E2-2 50X40	E 2.2 - 50 x 40	50	40	90	14	2	-
E2-1 60X16	E 2.1 - 60 x 16	60	16	160	-	1	811-102030
E2-1 60X20	E 2.1 - 60 x 20	60	20	160	-	1	811-102030
E2-1 60X25	E 2.1 - 60 x 25	60	25	160	-	1	811-102037
E2-1 60X32	E 2.1 - 60 x 32	60	32	160	-	1	811-106004
E2-1 60X40	E 2.1 - 60 x 40	60	40	160	-	1	0385

UNIVERSAL REDUCTION SLEEVES WITH STOP

FIG. 1

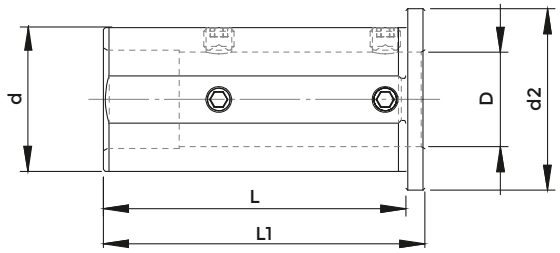

FIG. 2

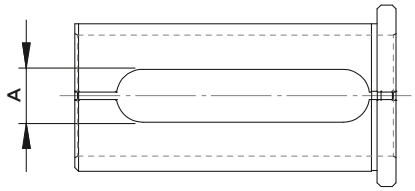

EG.1 - EG.2

COD.	DESCRIPTION	d	D	L	L1	d2	A	FIG.	SCREW
5964	EG.1 - 20 x 6	20	6	50	55	28	-	1	0365
5965	EG.1 - 20 x 8	20	8	50	55	28	-	1	0368
5966	EG.1 - 20 x 10	20	10	50	55	28	-	1	0367
5967	EG.1 - 20 x 12	20	12	50	55	28	-	1	0367
5994	EG.2 - 20 x 14	20	14	50	55	28	9	2	-
115-62573	EG.1 - 25 x 6	25	6	60	65	33	-	1	0365
115-62538	EG.1 - 25 x 8	25	8	60	65	33	-	1	811-106015
115-62539	EG.1 - 25 x 10	25	10	60	65	33	-	1	811-106015
115-62540	EG.1 - 25 x 12	25	12	60	65	33	-	1	0368
5972	EG.1 - 25 x 14	25	14	60	65	33	-	1	0367
5995	EG.2 - 25 x 16	25	16	60	65	33	9	2	-
5996	EG.2 - 25 x 18	25	18	60	65	33	9	2	-
5973	EG.1 - 32 x 6	32	6	70	75	40	-	1	0366
5974	EG.1 - 32 x 8	32	8	70	75	40	-	1	811-106001
5975	EG.1 - 32 x 10	32	10	70	75	40	-	1	811-106001
5976	EG.1 - 32 x 12	32	12	70	75	40	-	1	0370
5977	EG.1 - 32 x 14	32	14	70	75	40	-	1	811-106015
D32L70D16	EG.1 - 32 x 16	32	16	70	75	40	-	1	811-106015
5979	EG.1 - 32 x 18	32	18	70	75	40	-	1	811-106015
D32L70D20	EG.1 - 32 x 20	32	20	70	75	40	-	1	811-106036
D32L70D25	EG.2 - 32 x 25	32	25	70	75	40	14	2	-
5960	EG.1 - 40 x 6	40	6	80	85	48	-	1	0366
165-64135	EG.1 - 40 x 8	40	8	80	85	48	-	1	811-102114
5982	EG.1 - 40 x 10	40	10	80	85	48	-	1	811-102020
5983	EG.1 - 40 x 12	40	12	80	85	48	-	1	811-102020
5984	EG.1 - 40 x 14	40	14	80	85	48	-	1	811-102020
5985	EG.1 - 40 x 16	40	16	80	85	48	-	1	811-106001
5986	EG.1 - 40 x 18	40	18	80	85	48	-	1	811-106001
5987	EG.1 - 40 x 20	40	20	80	85	48	-	1	811-102026
G5988	EG.1 - 40 x 25	40	25	80	85	48	-	1	811-106036
5998	EG.2 - 40 x 32	40	32	80	85	48	14	2	-
7063	EG.1 - 50 x 8	50	8	90	95	58	-	1	811-102114
7064	EG.1 - 50 x 10	50	10	90	95	58	-	1	811-102020
7065	EG.1 - 50 x 12	50	12	90	95	58	-	1	811-102020
7066	EG.1 - 50 x 14	50	14	90	95	58	-	1	811-102020
5989	EG.1 - 50 x 16	50	16	90	95	58	-	1	811-102028
5990	EG.1 - 50 x 18	50	18	90	95	58	-	1	811-102028
5991	EG.1 - 50 x 20	50	20	90	95	58	-	1	811-102028
5992	EG.1 - 50 x 25	50	25	90	95	58	-	1	811-106002
5993	EG.1 - 50 x 32	50	32	90	95	58	-	1	811-102026
5999	EG.2 - 50 x 40	50	40	90	95	58	14	2	-

EXTENDED UNIVERSAL REDUCTION SLEEVES WITH STOP

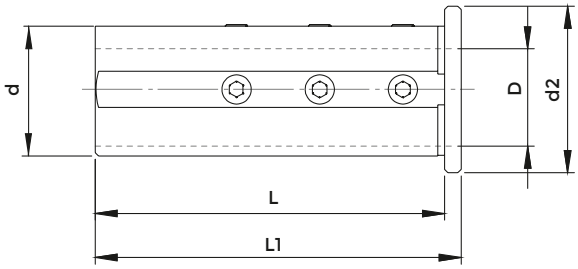

EG.3

COD.	DESCRIPTION	d	D	L	L1	d2	SCREW
165-63222	EG. 3 - 32 x 6	32	6	85	90	40	0366
115-63260	EG. 3 - 32 x 8	32	8	85	90	40	811-106001
115-63261	EG. 3 - 32 x 10	32	10	85	90	40	0370
115-63211	EG. 3 - 32 x 12	32	12	85	90	40	0370
7042	EG. 3 - 32 x 14	32	14	85	90	40	0370
115-63212	EG. 3 - 32 x 16	32	16	85	90	40	811-106015
7043	EG. 3 - 32 x 18	32	18	85	90	40	811-106015
115-63213	EG. 3 - 32 x 20	32	20	85	90	40	0367
165-64074	EG. 3 - 40 x 6	40	6	105	110	50	0366
115-64043	EG. 3 - 40 x 8	40	8	105	110	50	811-102114
115-64044	EG. 3 - 40 x 10	40	10	105	110	50	811-102020
115-64045	EG. 3 - 40 x 12	40	12	105	110	50	811-102020
5918	EG. 3 - 40 x 14	40	14	105	110	50	811-102020
115-64046	EG. 3 - 40 x 16	40	16	105	110	50	811-106002
5919	EG. 3 - 40 x 18	40	18	105	110	50	811-106002
115-64047	EG. 3 - 40 x 20	40	20	105	110	50	811-102026
115-64048	EG. 3 - 40 x 25	40	25	105	110	50	811-106036
115-65053	EG. 3 - 50 x 12	50	12	125	130	60	811-102029
7044	EG. 3 - 50 x 14	50	14	125	130	60	811-102029
115-65013	EG. 3 - 50 x 16	50	16	125	130	60	811-102028
7045	EG. 3 - 50 x 18	50	18	125	130	60	811-102028
115-65014	EG. 3 - 50 x 20	50	20	125	130	60	811-102028
115-65015	EG. 3 - 50 x 25	50	25	125	130	60	811-106002
115-65016	EG. 3 - 50 x 32	50	32	125	130	60	811-102026
115-66017	EG. 3 - 60 x 20	60	20	135	140	70	811-102038
115-66018	EG. 3 - 60 x 25	60	25	135	140	70	811-102037
115-66019	EG. 3 - 60 x 32	60	32	135	140	70	811-106004
115-66020	EG. 3 - 60 x 40	60	40	135	140	70	0385
115-68006	EG. 3 - 80 x 25	80	25	145	150	90	811-106005
115-68007	EG. 3 - 80 x 32	80	32	145	150	90	811-106005
115-68008	EG. 3 - 80 x 40	80	40	145	150	90	811-106005
115-68009	EG. 3 - 80 x 50	80	50	145	150	90	811-106005

SLOTTED REDUCTION SLEEVES WITH STOP

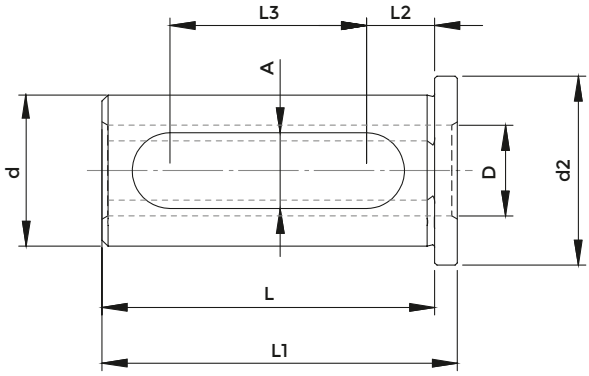

EG.5

COD.	DESCRIPTION	d	D	L	L1	L2	L3	A	d2
115-62027	EG. 5 - 20 x 8	20	8	44	47	9,5	25	11	25
115-62028	EG. 5 - 20 x 10	20	10	44	47	9,5	25	11	25
115-62029	EG. 5 - 20 x 12	20	12	44	47	9,5	25	11	25
8880	EG. 5 - 20 x 14	20	14	44	47	9,5	25	11	25
115-62030	EG. 5 - 20 x 16	20	16	44	47	9,5	25	11	25
8557	EG. 5 - 25 x 8	25	8	54	57	8,5	33	13	30
8558	EG. 5 - 25 x 10	25	10	54	57	8,5	33	13	30
8559	EG. 5 - 25 x 12	25	12	54	57	8,5	33	13	30
8560	EG. 5 - 25 x 14	25	14	54	57	8,5	33	13	30
8561	EG. 5 - 25 x 16	25	16	54	57	8,5	33	13	30
8562	EG. 5 - 25 x 18	25	18	54	57	8,5	33	13	30
8563	EG. 5 - 25 x 20	25	20	54	57	8,5	33	13	30
8564	EG. 5 - 32 x 8	32	8	64	68	8,5	42	13	37
8565	EG. 5 - 32 x 10	32	10	64	68	8,5	42	13	37
8566	EG. 5 - 32 x 12	32	12	64	68	8,5	42	13	37
8567	EG. 5 - 32 x 14	32	14	64	68	8,5	42	13	37
8568	EG. 5 - 32 x 16	32	16	64	68	8,5	42	13	37
8569	EG. 5 - 32 x 18	32	18	64	68	8,5	42	13	37
8570	EG. 5 - 32 x 20	32	20	64	68	8,5	42	13	37
8571	EG. 5 - 32 x 25	32	25	64	68	8,5	42	13	37
8835	EG. 5 - 40 x 12	40	12	74	79	9	51	14	45
8836	EG. 5 - 40 x 14	40	14	74	79	9	51	14	45
8837	EG. 5 - 40 x 16	40	16	74	79	9	51	14	45
8838	EG. 5 - 40 x 18	40	18	74	79	9	51	14	45
165-64095	EG. 5 - 40 x 20	40	20	74	79	9	51	14	45
165-64096	EG. 5 - 40 x 25	40	25	74	79	9	51	14	45
165-64097	EG. 5 - 40 x 32	40	32	74	79	9	51	14	45

LONG TYPE WITH DOUBLE SLOT

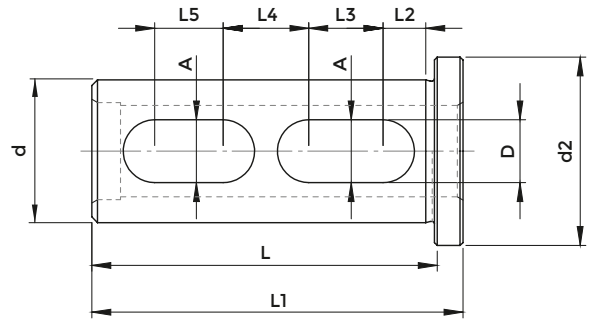

EG.4

COD.	DESCRIPTION	d	D	L	L1	L2	L3	L4	L5	A	d2
115-62541	EG. 4 - 25 x 16	25	16	60	65	9	13	15	12	11	33
115-63214	EG. 4 - 32 x 25	32	25	85	90	9	25	18	22	11	40
115-64049	EG. 4 - 40 x 32	40	32	105	110	10	35	20	28	13	50
115-65017	EG. 4 - 50 x 40	50	40	125	130	10	45	20	37	13	60
115-66021	EG. 4 - 60 x 50	60	50	135	140	15	40	28	28	13	70
115-68010	EG. 4 - 80 x 60	80	60	145	150	25	30	25	15	14	90

SLOTTED REDUCTION SLEEVES WITH GRAIN ON THE STOP

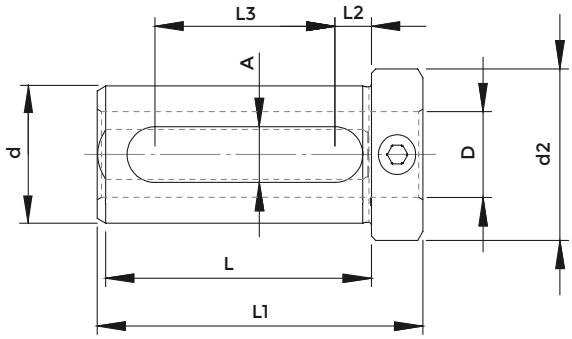

EG.6

COD.	DESCRIPTION	d	D	L	L1	L2	L3	A	d2	SCREW
115-62044	EG. 6 - 20 x 8	20	8	49	59	7,5	29	11	27	0370
115-62045	EG. 6 - 20 x 10	20	10	49	59	7,5	29	11	27	0370
115-62046	EG. 6 - 20 x 12	20	12	49	59	7,5	29	11	27	0370
8757	EG. 6 - 20 x 14	20	14	49	59	7,5	29	11	27	0370
115-62047	EG. 6 - 20 x 16	20	16	49	59	7,5	29	11	27	0368
165-62545	EG. 6 - 25 x 12	25	12	54	66	8,5	32	13	32	811-102028
8760	EG. 6 - 25 x 14	25	14	54	66	8,5	32	13	32	811-106036
165-62547	EG. 6 - 25 x 16	25	16	54	66	8,5	32	13	32	811-106036
8762	EG. 6 - 25 x 18	25	18	54	66	8,5	32	13	32	811-106036
165-62549	EG. 6 - 25 x 20	25	20	54	66	8,5	32	13	32	811-106036
165-63347	EG. 6 - 32 x 16	32	16	64	76	8,5	42	13	39	811-102028
8765	EG. 6 - 32 x 18	32	18	64	76	8,5	42	13	39	811-102028
165-63349	EG. 6 - 32 x 20	32	20	64	76	8,5	42	13	39	811-106036
165-63350	EG. 6 - 32 x 25	32	25	64	76	8,5	42	13	39	811-106036
165-64241	EG. 6 - 40 x 16	40	16	74	88	9	51	14	48	811-102037
8769	EG. 6 - 40 x 18	40	18	74	88	9	51	14	48	811-102037
165-64243	EG. 6 - 40 x 20	40	20	74	88	9	51	14	48	811-102037
165-64244	EG. 6 - 40 x 25	40	25	74	88	9	51	14	48	811-106003
165-64245	EG. 6 - 40 x 32	40	32	74	88	9	51	14	48	811-106003
165-65017	EG. 6 - 50 x 25	50	25	84	98	9	61	14	59	811-102037
165-65018	EG. 6 - 50 x 32	50	32	84	98	9	61	14	59	811-102037
165-65019	EG. 6 - 50 x 40	50	40	84	98	9	61	14	59	811-106003
165-66056	EG. 6 - 60 x 25	60	25	94	108	9	71	14	69	811-102037
165-66057	EG. 6 - 60 x 32	60	32	94	108	9	71	14	69	811-102037
165-66058	EG. 6 - 60 x 40	60	40	94	108	9	71	14	69	811-102037
165-66059	EG. 6 - 60 x 50	60	50	94	108	9	71	14	69	811-106003

REDUCTION SLEEVES WITH EXTENSION

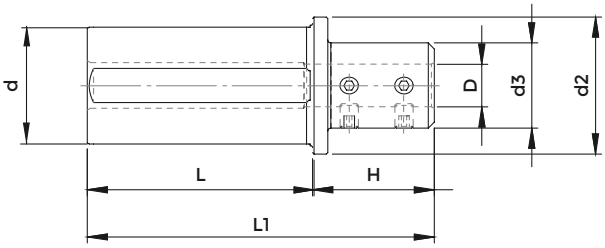

EG.7

COD.	DESCRIPTION	d	D	L	H	L2	d2	d3	SCREW
9567	EG. 7 - 25 x 6	25	6	54	30	84	30	20	0365
9568	EG. 7 - 25 x 8	25	8	54	30	84	30	22	0370
9569	EG. 7 - 25 x 10	25	10	54	30	84	30	24	0370
9570	EG. 7 - 25 x 12	25	12	54	30	84	30	26	0370
9571	EG. 7 - 25 x 14	25	14	54	30	84	30	28	0370
9572	EG. 7 - 25 x 16	25	16	54	30	84	30	30	0370
9573	EG. 7 - 32 x 6	32	6	64	30	94	37	20	0365
9574	EG. 7 - 32 x 8	32	8	64	30	94	37	22	0370
9575	EG. 7 - 32 x 10	32	10	64	30	94	37	24	0370
9576	EG. 7 - 32 x 12	32	12	64	30	94	37	26	0370
9577	EG. 7 - 32 x 14	32	14	64	30	94	37	28	0370
9578	EG. 7 - 32 x 16	32	16	64	30	94	37	30	0370
9579	EG. 7 - 32 x 18	32	18	64	30	94	37	32	0370
9580	EG. 7 - 32 x 20	32	20	64	30	94	37	34	0370
9581	EG. 7 - 40 x 6	40	6	74	40	114	45	20	0365
9582	EG. 7 - 40 x 8	40	8	74	40	114	45	22	0370
9583	EG. 7 - 40 x 10	40	10	74	40	114	45	24	0370
9584	EG. 7 - 40 x 12	40	12	74	40	114	45	26	0370
9585	EG. 7 - 40 x 14	40	14	74	40	114	45	28	0370
9586	EG. 7 - 40 x 16	40	16	74	40	114	45	30	0370
9587	EG. 7 - 40 x 18	40	18	74	40	114	45	32	0370
9588	EG. 7 - 40 x 20	40	20	74	40	114	45	34	811-106036
9589	EG. 7 - 40 x 25	40	25	74	40	114	45	39	811-106036
9590	EG. 7 - 50 x 12	50	12	84	40	124	55	26	0370
9591	EG. 7 - 50 x 14	50	14	84	40	124	55	28	0370
9592	EG. 7 - 50 x 16	50	16	84	40	124	55	30	0370
9593	EG. 7 - 50 x 18	50	18	84	40	124	55	32	0370
9594	EG. 7 - 50 x 20	50	20	84	40	124	55	34	811-106036
9595	EG. 7 - 50 x 25	50	25	84	40	124	55	39	811-106036

SPLITTED REDUCTION SLEEVES WITH STOP - RZ TYPE

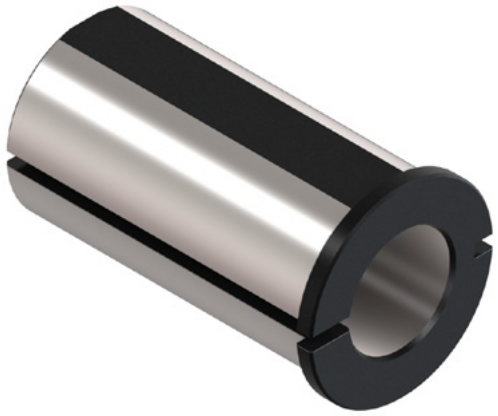

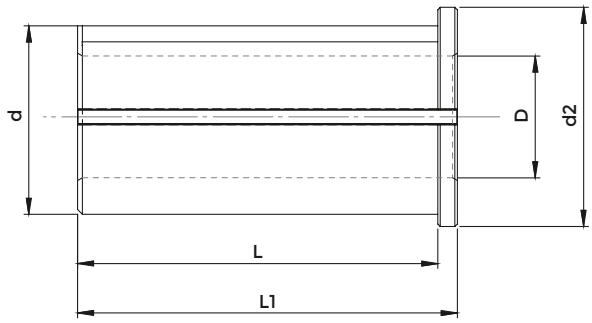

RZ

COD.	DESCRIPTION	d	D	L	L1	d2
5920	RZ - 20 x 8	20	8	36	40	25
RZ-20X10	RZ - 20 x 10	20	10	36	40	25
RZ-20X12	RZ - 20 x 12	20	12	36	40	25
RZ-20X14	RZ - 20 x 14	20	14	36	40	25
RZ-20X16	RZ - 20 x 16	20	16	36	40	25
RZ-25X08	RZ - 25 x 8	25	8	46	50	30
RZ-25X10	RZ - 25 x 10	25	10	46	50	30
RZ-25X12	RZ - 25 x 12	25	12	46	50	30
5928	RZ - 25 x 14	25	14	46	50	30
RZ-25X16	RZ - 25 x 16	25	16	46	50	30
5930	RZ - 25 x 18	25	18	46	50	30
RZ-25X20	RZ - 25 x 20	25	20	46	50	30
RZ-32X08	RZ - 32 x 8	32	8	56	60	37
RZ-32X10	RZ - 32 x 10	32	10	56	60	37
RZ-32X12	RZ - 32 x 12	32	12	56	60	37
5935	RZ - 32 x 14	32	14	56	60	37
RZ-32X16	RZ - 32 x 16	32	16	56	60	37
5937	RZ - 32 x 18	32	18	56	60	37
RZ-32X20	RZ - 32 x 20	32	20	56	60	37
RZ-32X25	RZ - 32 x 25	32	25	56	60	37
RZ-40X10	RZ - 40 x 10	40	10	74	78	45
RZ-40X12	RZ - 40 x 12	40	12	74	78	45
5943	RZ - 40 x 14	40	14	74	78	45
RZ-40X16	RZ - 40 x 16	40	16	74	78	45
5945	RZ - 40 x 18	40	18	74	78	45
RZ-40X20	RZ - 40 x 20	40	20	74	78	45
RZ-40X25	RZ - 40 x 25	40	25	74	78	45
RZ-40X32	RZ - 40 x 32	40	32	74	78	45
RZ-50X20	RZ - 50 x 20	50	20	84	88	55
RZ-50X25	RZ - 50 x 25	50	25	84	88	55
RZ-50X32	RZ - 50 x 32	50	32	84	88	55
RZ-50X40	RZ - 50 x 40	50	40	84	88	55
RZ-60X25	RZ - 60 x 25	60	25	88	92	65
RZ-60X32	RZ - 60 x 32	60	32	88	92	65
RZ-60X40	RZ - 60 x 40	60	40	88	92	65
RZ-60X50	RZ - 60 x 50	60	50	88	92	65

The double cut increases the bush elastic capacity reducing thus tool vibrations

GRINDED NOT HARDENED REDUCTION SLEEVES WITH STOP

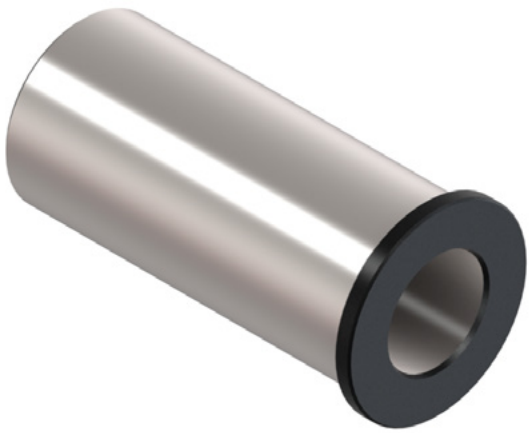

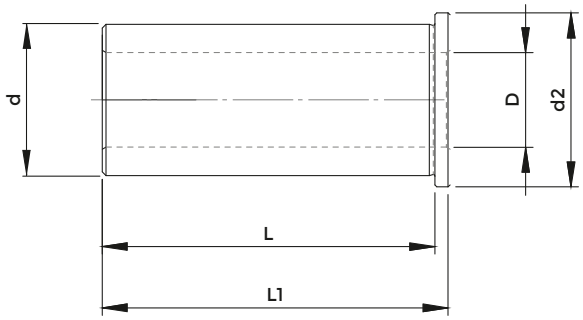

E2.LAV

COD.	DESCRIPTION	d	D	L	L1	d2
1509	E2 .LAV - 25 x 8	25	8	70	74	32
1511	E2 .LAV - 25 x 10	25	10	70	74	32
1513	E2 .LAV - 25 x 12	25	12	70	74	32
1517	E2 .LAV - 25 x 16	25	16	70	74	32
1519	E2 .LAV - 25 x 20	25	20	70	74	32
2284	E2 .LAV - 32 x 10	32	10	88	92	36
2286	E2 .LAV - 32 x 12	32	12	88	92	36
2289	E2 .LAV - 32 x 16	32	16	88	92	36
2291	E2 .LAV - 32 x 20	32	20	88	92	36
2293	E2 .LAV - 32 x 25	32	25	88	92	36
2440	E2 .LAV - 40 x 12	40	12	88	92	46
2442	E2 .LAV - 40 x 16	40	16	88	92	46
2446	E2 .LAV - 40 x 20	40	20	88	92	46
2460	E2 .LAV - 40 x 25	40	25	88	92	46
2466	E2 .LAV - 40 x 32	40	32	88	92	46

REDUCTION SLEEVES FOR BORING BAR HOLDERS

FIG. 1

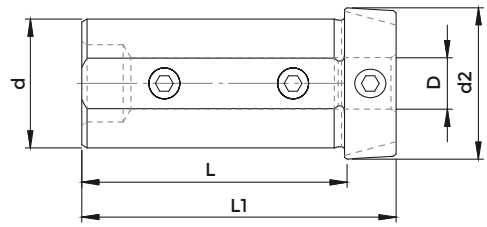

FIG. 2

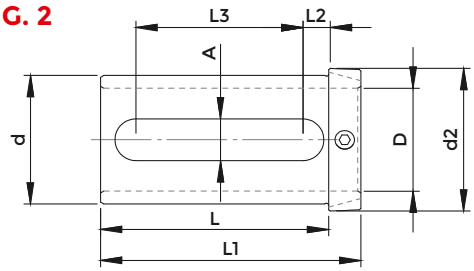

EG.R

COD.	DESCRIPTION	d	D	L	L1	L2	L3	A	d2	FIG.
9600	EG . R - 25 x 8	25	8	51	61	-	-	-	-	1
9601	EG . R - 25 x 10	25	10	51	61	-	-	-	-	1
9602	EG . R - 25 x 12	25	12	51	61	-	-	-	-	1
9603	EG . R - 25 x 14	25	14	51	61	-	-	-	-	1
9604	EG . R - 25 x 16	25	16	51	61	8	34	13	30	2
9605	EG . R - 25 x 18	25	18	51	61	8	34	13	30	2
165-62557	EG . R - 25 x 20	25	20	51	61	8	34	13	30	2
9607	EG . R - 32 x 8	32	8	57,5	67,5	-	-	-	-	1
9608	EG . R - 32 x 10	32	10	57,5	67,5	-	-	-	-	1
9609	EG . R - 32 x 12	32	12	57,5	67,5	-	-	-	-	1
9610	EG . R - 32 x 14	32	14	57,5	67,5	-	-	-	-	1
9611	EG . R - 32 x 16	32	16	57,5	67,5	8	40	13	37	2
9612	EG . R - 32 x 18	32	18	57,5	67,5	8	40	13	37	2
9613	EG . R - 32 x 20	32	20	57,5	67,5	8	40	13	37	2
9614	EG . R - 32 x 25	32	25	57,5	67,5	8	40	13	37	2
9615	EG . R - 40 x 8	40	8	71	81	-	-	-	-	1
9616	EG . R - 40 x 10	40	10	71	81	-	-	-	-	1
9617	EG . R - 40 x 12	40	12	71	81	-	-	-	-	1
9618	EG . R - 40 x 14	40	14	71	81	-	-	-	-	1
9619	EG . R - 40 x 16	40	16	71	81	8	52	13	45	2
9620	EG . R - 40 x 18	40	18	71	81	8	52	13	45	2
9621	EG . R - 40 x 20	40	20	71	81	8	52	13	45	2
9622	EG . R - 40 x 25	40	25	71	81	8	52	13	45	2
9623	EG . R - 40 x 32	40	32	71	81	8	52	13	45	2

Suitable for any boring bar (VDI, HSK, Polygonal, etc).
Stop shape avoids interference with coolant nozzles

MORSE TAPER REDUCTION SLEEVES WITHOUT STOP

FIG. 1

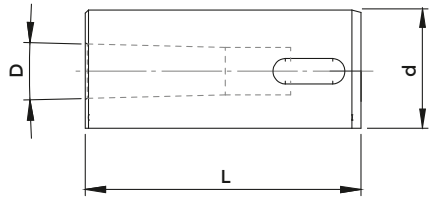

FIG. 2

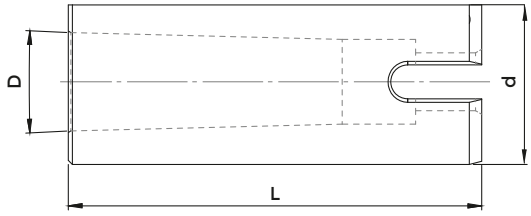

E 2.3

COD.	DESCRIPTION	d	CM	D	L	FIG.
E2-3 20X01	E 2.3 - 20 x 1	20	1	12,065	60	2
E2-3 20X2	E 2.3 - 20 x 2	20	2	17,78	90	1
5219	E 2.3 - 25 x 1	25	1	12,065	60	2
5220	E 2.3 - 25 x 2	25	2	17,78	90	1
E2-3 32X1	E 2.3 - 32 x 1	32	1	12,065	60	2
E2-3 32X2	E 2.3 - 32 x 2	32	2	17,78	90	1
E2-3 32X3	E 2.3 - 32 x 3	32	3	23,825	100	2
E2-3 40X2	E 2.3 - 40 x 2	40	2	17,78	90	1
E2-3 40X3	E 2.3 - 40 x 3	40	3	23,825	100	2
E2-3 40X4	E 2.3 - 40 x 4	40	4	31,267	120	2
E2-3 50X2	E 2.3 - 50 x 2	50	2	17,78	90	1
E2-3 50X3	E 2.3 - 50 x 3	50	3	23,825	100	2
E2-3 50X4	E 2.3 - 50 x 4	50	4	31,267	120	2
E2-3 60X3	E 2.3 - 60 x 3	60	3	23,825	160	1
E2-3 60X4	E 2.3 - 60 x 4	60	4	31,267	160	1
E2-3 60X5	E 2.3 - 60 x 5	60	5	44,399	160	2

MORSE TAPER REDUCTION SLEEVES WITH STOP

FIG. 1

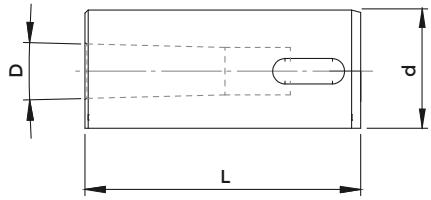

FIG. 2

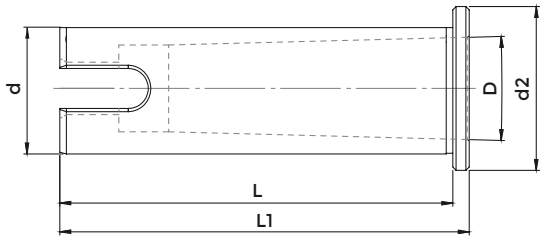

E 2.G6

COD.	DESCRIPTION	d	CM	D	L	L1	d2	FIG.
1722	E2.G6 - 20 x 1	20	1	12,065	65	70	28	2
1723	E2.G6 - 20 x 2	20	2	17,78	70	75	28	2
KMS-T22062	E2.G6 - 25 x 1	25	1	12,065	70	75	33	2
165-62517	E2.G6 - 25 x 2	25	2	17,78	70	75	33	2
E2-3 25X3	E2.G6 - 25 x 3	25	3	23,825	79	98	33	2
114-33208	E2.G6 - 32 x 1	32	1	12,065	85	90	40	1
114-33209	E2.G6 - 32 x 2	32	2	17,78	85	90	40	1
114-33210	E2.G6 - 32 x 3	32	3	23,825	95	100	40	2
114-34008	E2.G6 - 40 x 2	40	2	17,78	105	110	50	1
114-34009	E2.G6 - 40 x 3	40	3	23,825	105	110	50	1
114-34010	E2.G6 - 40 x 4	40	4	31,267	120	125	50	2
114-35004	E2.G6 - 50 x 2	50	2	17,78	125	130	63	1
114-35005	E2.G6 - 50 x 3	50	3	23,825	125	130	63	1
114-35006	E2.G6 - 50 x 4	50	4	31,267	125	130	63	1
114-36007	E2.G6 - 60 x 3	60	3	23,825	130	140	70	1
114-36008	E2.G6 - 60 x 4	60	4	31,267	130	140	70	1
114-36009	E2.G6 - 60 x 5	60	5	44,399	145	155	70	2

REDUCTION SLEEVES FOR BIGLIA ETC.

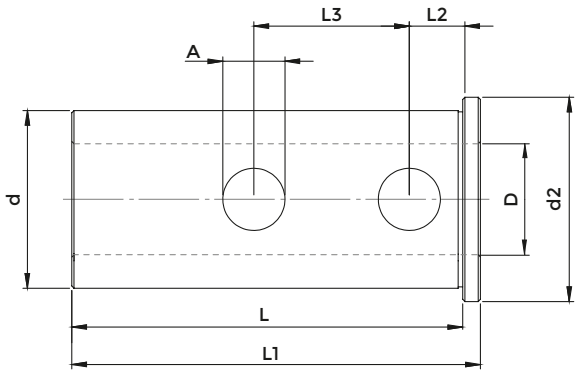

BG.1

COD.	DESCRIPTION	d	D	L	L1	L2	L3	A	d2
2823	BG.1 - 25 x 8	25	8	70	74	7	28	9	32
2824	BG.1 - 25 x 10	25	10	70	74	7	28	9	32
1064	BG.1 - 25 x 12	25	12	70	74	7	28	9	32
2198	BG.1 - 25 x 16	25	16	70	74	7	28	9	32
1212	BG.1 - 25 x 20	25	20	70	74	7	28	9	32
3229	BG.1 - 32 x 8	32	8	88	92	9	35	14	36
3230	BG.1 - 32 x 10	32	10	88	92	9	35	14	36
3231	BG.1 - 32 x 12	32	12	88	92	9	35	14	36
3232	BG.1 - 32 x 16	32	16	88	92	9	35	14	36
3233	BG.1 - 32 x 20	32	20	88	92	9	35	14	36
3234	BG.1 - 32 x 25	32	25	88	92	9	35	14	36
3240	BG.1 - 40 x 10	40	10	88	92	9	35	14	46
3239	BG.1 - 40 x 12	40	12	88	92	9	35	14	46
3238	BG.1 - 40 x 16	40	16	88	92	9	35	14	46
3235	BG.1 - 40 x 20	40	20	88	92	9	35	14	46
3236	BG.1 - 40 x 25	40	25	88	92	9	35	14	46
3237	BG.1 - 40 x 32	40	32	88	92	9	35	14	46

SHORT REDUCTION SLEEVES FOR BIGLIA ETC.

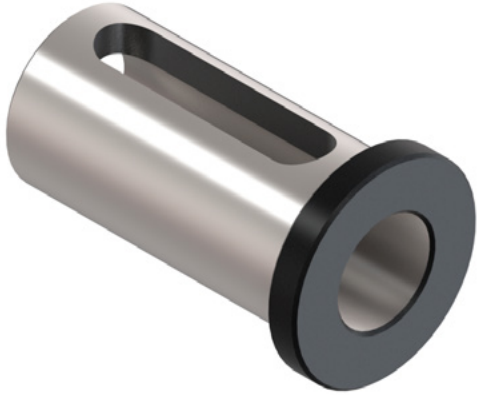

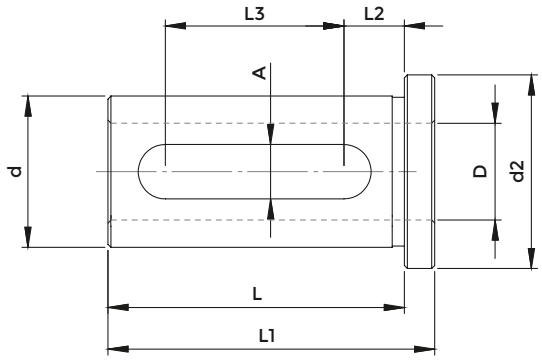

BG.2

COD.	DESCRIPTION	d	D	L	L1	L2	L3	A	d2
0022	BG.2 - 25 x 8	25	8	49	54	10	29,5	9	32
0024	BG.2 - 25 x 10	25	10	49	54	10	29,5	9	32
0025	BG.2 - 25 x 12	25	12	49	54	10	29,5	9	32
0091	BG.2 - 25 x 14	25	14	49	54	10	29,5	9	32
0026	BG.2 - 25 x 16	25	16	49	54	10	29,5	9	32
0092	BG.2 - 25 x 18	25	18	49	54	10	29,5	9	32
0034	BG.2 - 25 x 20	25	20	49	54	10	29,5	9	32

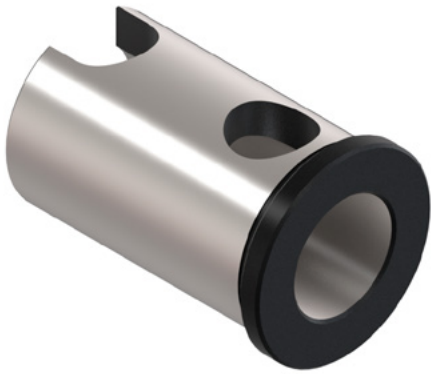

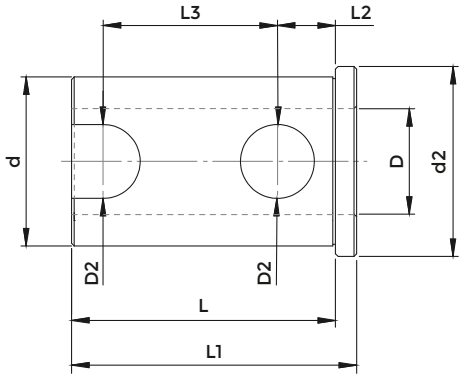

BG.2

COD.	DESCRIPTION	d	D	L	L1	L2	L3	A	d2
1083	BG.2 - 32 x 8	32	8	50	54	9	35	14	36
1236	BG.2 - 32 x 10	32	10	50	54	9	35	14	36
3246	BG.2 - 32 x 12	32	12	50	54	9	35	14	36
2604	BG.2 - 32 x 14	32	14	50	54	9	35	14	36
3247	BG.2 - 32 x 16	32	16	50	54	9	35	14	36
2605	BG.2 - 32 x 18	32	18	50	54	9	35	14	36
3248	BG.2 - 32 x 20	32	20	50	54	9	35	14	36
3249	BG.2 - 32 x 25	32	25	50	54	9	35	14	36
9558	BG.2 - 40 x 8	40	8	50	54	9	35	14	44
9559	BG.2 - 40 x 10	40	10	50	54	9	35	14	44
9560	BG.2 - 40 x 12	40	12	50	54	9	35	14	44
9561	BG.2 - 40 x 14	40	14	50	54	9	35	14	44
9562	BG.2 - 40 x 16	40	16	50	54	9	35	14	44
9563	BG.2 - 40 x 18	40	18	50	54	9	35	14	44
9564	BG.2 - 40 x 20	40	20	50	54	9	35	14	44
9565	BG.2 - 40 x 25	40	25	50	54	9	35	14	44
9566	BG.2 - 40 x 32	40	32	50	54	9	35	14	44

REDUCTION SLEEVES WITH GRAIN ON STOP FOR DOOSAN DAEWOO ETC.

FIG. 1

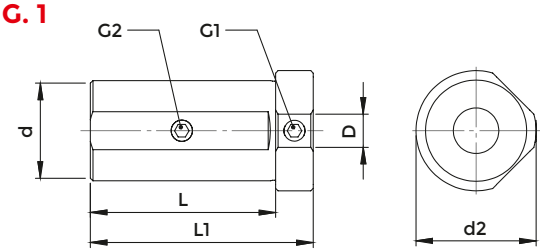

FIG. 2

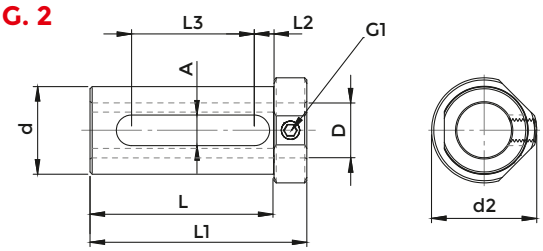

DW.1

COD.	DESCRIPTION	d	D	L	L1	L2	L3	A	d2	FIG.	SCREW 1	SCREW 2
8672	DW.1 - 32 x 10	32	10	79	94	-	-	-	40	1	811-106004	0385
8673	DW.1 - 32 x 12	32	12	79	94		-	-	40	1	811-106004	0385
8674	DW.1 - 32 x 16	32	16	79	94	-	-	-	40	1	811-106004	0385
8675	DW.1 - 32 x 20	32	20	79	94	9,5	60	11	40	2	0385	-
8676	DW.1 - 32 x 25	32	25	79	94	9,5	60	11	40	2	0385	-
165-64089	DW.1 - 40 x 10	40	10	74	89	-	-	-	48	1	811-102037	811-106004
165-64090	DW.1 - 40 x 12	40	12	74	89	-	-	-	48	1	811-102037	811-106004
165-64091	DW.1 - 40 x 16	40	16	74	89	-	-	-	48	1	811-102037	811-106003
165-64092	DW.1 - 40 x 20	40	20	84	99	9	56	14	48	2	811-106004	-
165-64093	DW.1 - 40 x 25	40	25	84	99	9	56	14	48	2	811-106004	-
165-64094	DW.1 - 40 x 32	40	32	84	99	9	56	14	48	2	0385	-

SLOTTED REDUCTION SLEEVES WITH STOP FOR DOOSAN DAEWOO ETC.

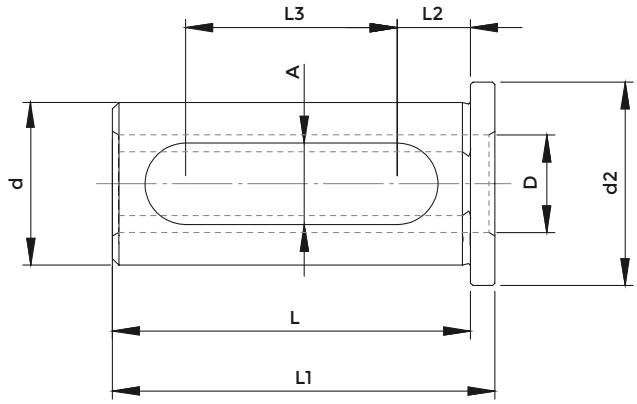

DW.2

COD.	DESCRIPTION	d	D	L	L1	L2	L3	A	d2
115-62027	DW.2 - 20 x 8	20	8	44	47	9,5	25	11	25
115-62028	DW.2 - 20 x 10	20	10	44	47	9,5	25	11	25
115-62029	DW.2 - 20 x 12	20	12	44	47	9,5	25	11	25
8880	DW.2 - 20 x 14	20	14	44	47	9,5	25	11	25
115-62030	DW.2 - 20 x 16	20	16	44	47	9,5	25	11	25
8557	DW.2 - 25 x 8	25	8	54	57	8,5	33	13	30
8558	DW.2 - 25 x 10	25	10	54	57	8,5	33	13	30
8559	DW.2 - 25 x 12	25	12	54	57	8,5	33	13	30
8560	DW.2 - 25 x 14	25	14	54	57	8,5	33	13	30
8561	DW.2 - 25 x 16	25	16	54	57	8,5	33	13	30
8562	DW.2 - 25 x 18	25	18	54	57	8,5	33	13	30
8563	DW.2 - 25 x 20	25	20	54	57	8,5	33	13	30
8564	DW.2 - 32 x 8	32	8	64	68	8,5	42	13	37
8565	DW.2 - 32 x 10	32	10	64	68	8,5	42	13	37
8566	DW.2 - 32 x 12	32	12	64	68	8,5	42	13	37
8567	DW.2 - 32 x 14	32	14	64	68	8,5	42	13	37
8568	DW.2 - 32 x 16	32	16	64	68	8,5	42	13	37
8569	DW.2 - 32 x 18	32	18	64	68	8,5	42	13	37
8570	DW.2 - 32 x 20	32	20	64	68	8,5	42	13	37
8571	DW.2 - 32 x 25	32	25	64	68	8,5	42	13	37
8835	DW.2 - 40 x 12	40	12	74	79	9	51	14	45
8836	DW.2 - 40 x 14	40	14	74	79	9	51	14	45
8837	DW.2 - 40 x 16	40	16	74	79	9	51	14	45
8838	DW.2 - 40 x 18	40	18	74	79	9	51	14	45
165-64095	DW.2 - 40 x 20	40	20	74	79	9	51	14	45
165-64096	DW.2 - 40 x 25	40	25	74	79	9	51	14	45
165-64097	DW.2 - 40 x 32	40	32	74	79	9	51	14	45

REDUCTION SLEEVES FOR MAZAK ETC.

FIG. 1

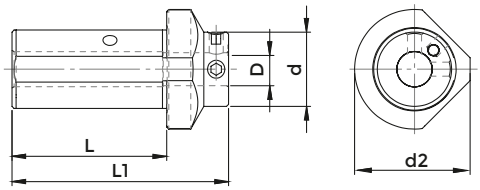

FIG. 2

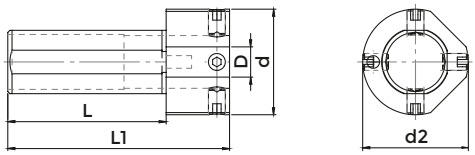

MZ.1

COD.	DESCRIPTION	d	D	L	L1	d2	FIG.	SCREW
165-63241	MZ.1 - 32 x 8	32	8	60	85	50	1	811-102020
165-63242	MZ.1 - 32 x 10	32	10	60	85	50	1	811-102020
165-63243	MZ.1 - 32 x 12	32	12	60	85	50	1	811-102028
165-63244	MZ.1 - 32 x 16	32	16	60	85	50	1	811-106002
165-63245	MZ.1 - 32 x 20	32	20	60	85	50	2	811-102028
165-63246	MZ.1 - 32 x 25	32	25	60	85	50	2	811-102028
165-64114	MZ.1 - 40 x 8	40	8	75	105	58	1	811-102020
165-64115	MZ.1 - 40 x 10	40	10	75	105	58	1	811-102020
165-64116	MZ.1 - 40 x 12	40	12	75	105	58	1	811-102028
165-64117	MZ.1 - 40 x 16	40	16	75	105	58	1	811-106002
165-64118	MZ.1 - 40 x 20	40	20	75	105	58	1	811-102030
165-64119	MZ.1 - 40 x 25	40	25	75	105	58	2	811-102026
165-64120	MZ.1 - 40 x 32	40	32	75	105	58	2	811-102026

SHORT REDUCTION SLEEVES FOR MAZAK ETC.

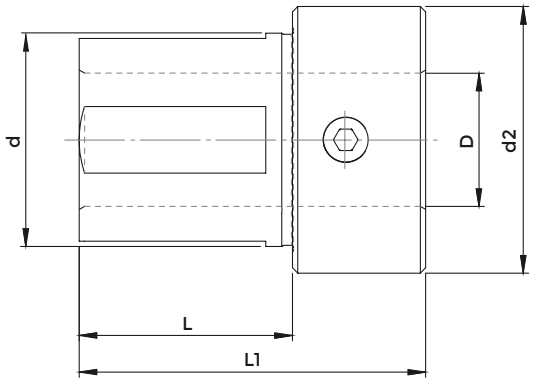

MZ.2

COD.	DESCRIPTION	d	D	L	L1	d2	SCREW
165-63247	MZ.2 - 32 x 20	32	20	40	65	42	811-106002
165-63248	MZ.2 - 32 x 25	32	25	40	65	42	811-102026
165-64121	MZ.2 - 40 x 20	40	20	40	65	50	811-102029
165-64122	MZ.2 - 40 x 25	40	25	40	65	50	811-102028
165-64123	MZ.2 - 40 x 32	40	32	40	65	50	811-106002

MORSE TAPER REDUCTION SLEEVES FOR MAZAK ETC.

FIG. 1

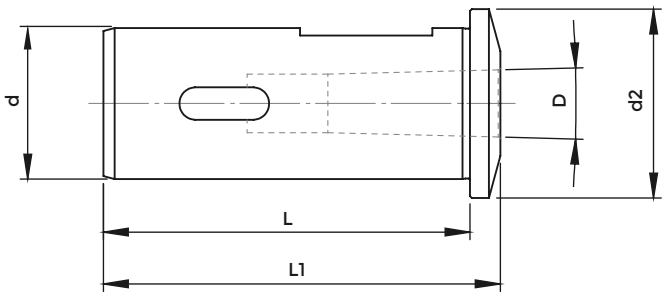

FIG. 2

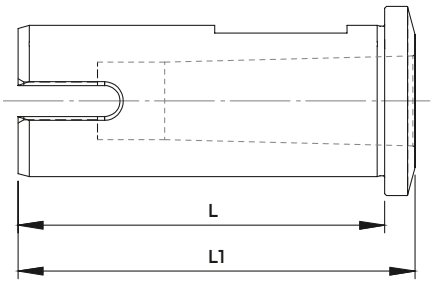

MZ.3

COD.	DESCRIPTION	d	CM	D	L	L1	d2	FIG.
8983	MZ.3 - 32 x 1	32	1	12,065	54	66	42	2
8984	MZ.3 - 32 x 2	32	2	17,78	58	70	42	2
114-34015	MZ.3 - 40 x 1	40	1	12,065	97	105	50	1
114-34016	MZ.3 - 40 x 2	40	2	17,78	97	105	50	1
114-34017	MZ.3 - 40 x 3	40	3	23,825	97	105	50	2

REDUCTION SLEEVES FOR DMG MORI SEIKI ETC.

FIG. 1

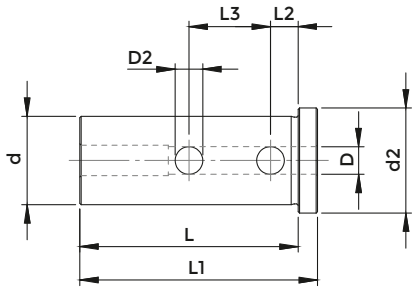

FIG. 2

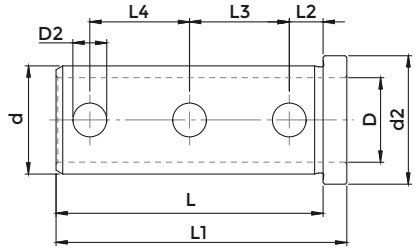

MS.1

COD.	DESCRIPTION	d	D	L	L1	L2	L3	L4	D2	d2	FIG.
7035	MS.1 - 32 x 6	32	6	79	86	10	29,5	-	10	38	1
KMS-T20112	MS.1 - 32 x 8	32	8	79	86	10	29,5	-	10	38	1
KMS-T20114	MS.1 - 32 x 10	32	10	79	86	10	29,5	-	10	38	1
KMS-T20116	MS.1 - 32 x 12	32	12	79	86	10	29,5	29,5	10	38	2
KMS-T20118	MS.1 - 32 x 16	32	16	79	86	10	29,5	29,5	10	38	2
KMS-T20120	MS.1 - 32 x 20	32	20	79	86	10	29,5	29,5	10	38	2
KMS-T20122	MS.1 - 32 x 25	32	25	79	86	10	29,5	29,5	10	38	2
KMS-T20086	MS.1 - 40 x 8	40	8	89	96	10	33	-	12	46	1
KMS-T20088	MS.1 - 40 x 10	40	10	89	96	10	33	-	12	46	1
KMS-T20090	MS.1 - 40 x 12	40	12	89	96	10	33	-	12	46	1
KMS-T20092	MS.1 - 40 x 16	40	16	89	96	10	33	33	12	46	2
KMS-T20094	MS.1 - 40 x 20	40	20	89	96	10	33	33	12	46	2
KMS-T20096	MS.1 - 40 x 25	40	25	89	96	10	33	33	12	46	2
KMS-T20098	MS.1 - 40 x 32	40	32	89	96	10	33	33	12	46	2

SHORT REDUCTION SLEEVES FOR DMG MORI SEIKI ETC.

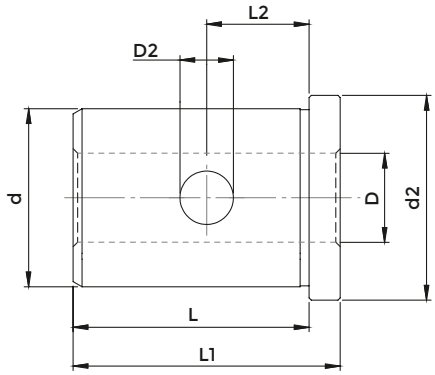

MS.2

COD.	DESCRIPTION	d	D	L	L1	L2	D2	d2
KMS-T22068	MS.2 - 32 x 16	32	16	53	60	20	12	38
KMS-T22052	MS.2 - 32 x 20	32	20	53	60	20	12	38
KMS-T22054	MS.2 - 32 x 25	32	25	53	60	20	12	38
KMS-T20190	MS.2 - 40 x 16	40	16	53	60	23	12	46
KMS-T20104	MS.2 - 40 x 20	40	20	53	60	23	12	46
KMS-T20102	MS.2 - 40 x 25	40	25	53	60	23	12	46
165-64206	MS.2 - 40 x 32	40	32	53	60	23	12	46

SHORT REDUCTION SLEEVES FOR DMG MORI SEIKI ETC.

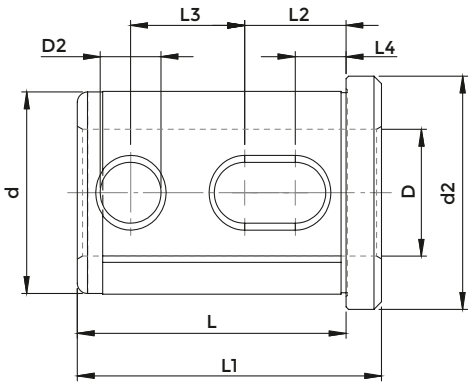

MS.2A

COD.	DESCRIPTION	d	D	L	L1	L2	L3	L4	D2	d2
KMS-T20190-A	MS.2A - 40 x 16	40	16	53	60	20	22,5	-	12	46
KMS-T20104-A	MS.2A - 40 x 20	40	20	53	60	20	22,5	-	12	46
KMS-T20102-A	MS.2A - 40 x 25	40	25	53	60	20	22,5	10	12	46
KMS-T20100-A	MS.2A - 40 x 32	40	32	53	60	20	22,5	10	12	46

MORSE TAPER REDUCTION SLEEVES FOR DMG MORI SEIKI ETC.

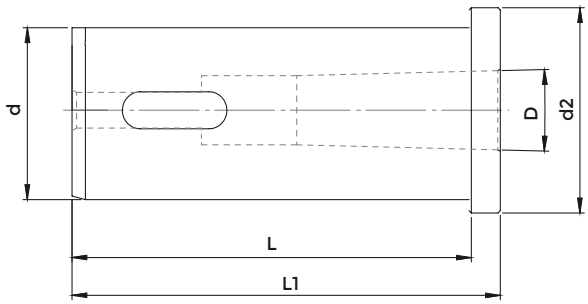

MS.4

COD.	DESCRIPTION	d	CM	D	L	L1	d2
114-34012	MS.4 - 40 x 1	40	1	12,065	89	96	46
KMS-T22046	MS.4 - 40 x 2	40	2	17,78	89	96	46
KMS-T22042	MS.4 - 40 x 3	40	3	23,825	89	108	46
KMS-T22044	MS.4 - 50 x 4	50	4	31,267	89	135	56

THROUGH COOLANT MORSE TAPER REDUCTION SLEEVES FOR DMG MORI SEIKI ETC

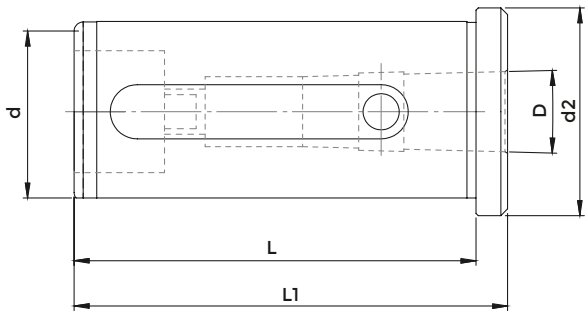

MS.4A

COD.	DESCRIPTION	d	CM	D	L	L1	d2
KMS-T22050-A	MS.4A - 32 x 1	32	1	12,065	78	85	40
KMS-T22048-A	MS.4A - 32 x 2	32	2	17,78	78	85	40
KMS-T22066-A	MS.4A - 40 x 1	40	1	12,065	89	96	46
KMS-T22046-A	MS.4A - 40 x 2	40	2	17,78	89	96	46
KMS-T22042-A	MS.4A - 40 x 3	40	3	23,825	89	96	46
KMS-T22044-A	MS.4A - 40 x 4	40	4	31,267	109	116	46

THROUGH COOLANT EXTENDED REDUCTION SLEEVES FOR DMG MORI SEIKI ETC.

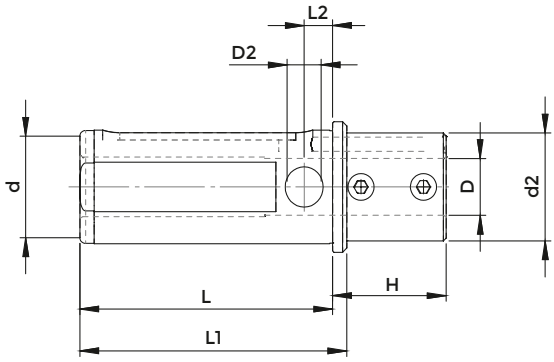

MS.3A

COD.	DESCRIPTION	d	D	L	H	L1	L2	D2	d2	d3	SCREW
KMS-T20106-A	MS.3A - 40 x 8	40	8	89	40	129	10	12	46	38	811-102028
KMS-T20108-A	MS.3A - 40 x 10	40	10	89	40	129	10	12	46	38	811-102028
KMS-T20110-A	MS.3A - 40 x 12	40	12	89	40	129	10	12	46	38	811-102028
KMS-T20194-A	MS.3A - 40 x 16	40	16	89	40	129	10	12	46	38	811-106002
KMS-T20196-A	MS.3A - 40 x 20	40	20	89	40	129	10	12	46	38	811-102026

REDUCTION SLEEVES FOR NAKAMURA TOME ETC.

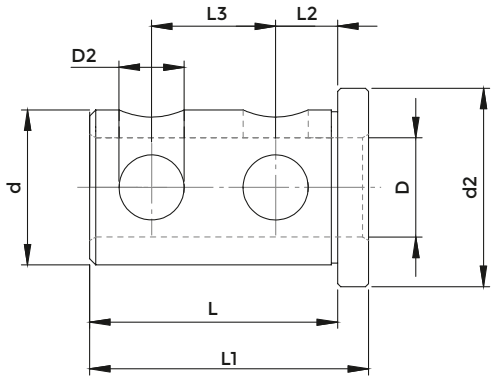

NT.1

COD.	DESCRIPTION	d	D	L	L1	L2	L3	D2	d2
8876	NT.1 - 25 x 10	25	10	40	45	10	20	10,5	32
8877	NT.1 - 25 x 12	25	12	40	45	10	20	10,5	32
8878	NT.1 - 25 x 16	25	16	40	45	10	20	10,5	32
8879	NT.1 - 25 x 20	25	20	40	45	10	20	10,5	32

REDUCTION SLEEVES FOR OKUMA LT 10M / LT 200M ETC.

FIG. 1

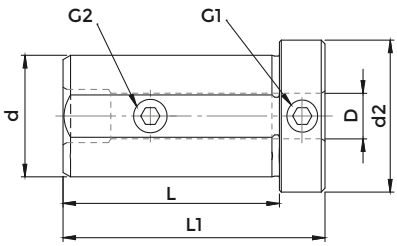

FIG. 2

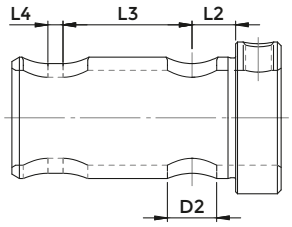

OK.1

COD.	DESCRIPTION	d	D	L	L1	L2	L3	L4	D2	d2	FIG.	SCREW 1	SCREW 2
115-63286	OK.1 - 32 x 8	32	8	57	69	-	-	-	-	40	1	811-102029	811-106002
115-63288	OK.1 - 32 x 10	32	10	57	69	-	-	-	-	40	1	811-102029	811-106002
115-63290	OK.1 - 32 x 12	32	12	57	69	-	-	-	-	40	1	811-102028	811-102026
115-63292	OK.1 - 32 x 16	32	16	59	71	11,5	35	4	13	40	2	811-102028	-
115-63294	OK.1 - 32 x 20	32	20	59	71	11,5	35	4	13	40	2	811-106002	-
115-63296	OK.1 - 32 x 25	32	25	59	71	11,5	35	4	13	40	2	811-102026	-

REDUCTION SLEEVES FOR OKUMA LT 15M / LT 300M ETC.

FIG. 1

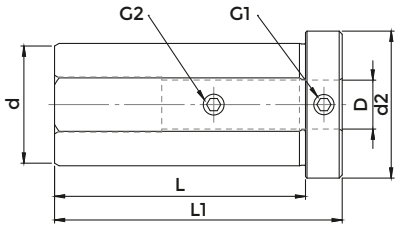

FIG. 2

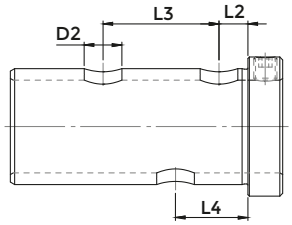

OK.2

COD.	DESCRIPTION	d	D	L	L1	L2	L3	L4	D2	d2	FIG.	SCREW 1	SCREW 2
115-64098	OK.2 - 40 x 12	40	12	82	94	-	-	-	-	48	1	811-102029	811-102028
115-64099	OK.2 - 40 x 16	40	16	82	94	-	-	-	-	48	1	811-102029	811-106002
165-64001	OK.2 - 40 x 20	40	20	82	94	-	-	-	-	48	1	811-102028	811-102026
165-64002	OK.2 - 40 x 25	40	25	82	94	10	40	25	13	48	2	811-102028	-
165-64003	OK.2 - 40 x 32	40	32	82	94	10	40	25	13	48	2	811-102026	-

REDUCTION SLEEVES FOR OKUMA LB 15 II ETC.

FIG. 1

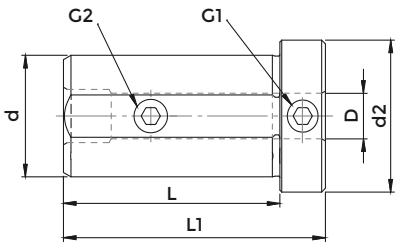

FIG. 2

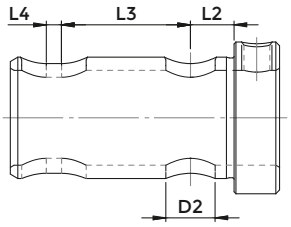

OK.4

COD.	DESCRIPTION	d	D	L	L1	L2	L3	L4	D2	D3	d2	FIG.	SCREW 1	SCREW 2
165-64013	OK.4 - 40 x 10	40	10	80	95	-	-	-	-	-	48	1	811-102030	811-102028
165-64014	OK.4 - 40 x 12	40	12	80	95	-	-	-	-	-	48	1	811-102037	811-106004
165-64015	OK.4 - 40 x 16	40	16	80	95	-	-	-	-	-	48	1	811-102037	811-106003
165-64016	OK.4 - 40 x 20	40	20	80	95	-	-	-	-	-	48	1	811-106004	0385
165-64017	OK.4 - 40 x 25	40	25	68	80	11,5	42	15	16	13	48	2	811-106002	-
165-64018	OK.4 - 40 x 32	40	32	68	80	11,5	42	15	16	13	48	2	811-102026	-

REDUCTION SLEEVES FOR OKUMA MACTURN 250 / MULTUS ETC.

FIG. 1

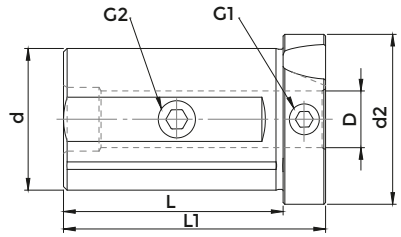

FIG. 2

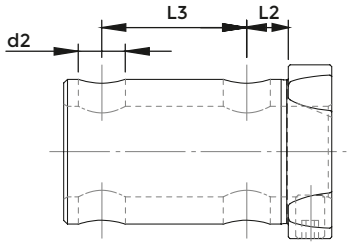

OK.7

COD.	DESCRIPTION	d	D	L	L1	L2	L3	D2	d2	FIG.	SCREW 1	SCREW 2
165-64004	OK.7 - 40 x 10	40	10	62	74	-	-	-	48	1	811-102029	811-102028
165-64125	OK.7 - 40 x 12	40	12	62	74	-	-	-	48	1	811-102029	811-102028
165-64126	OK.7 - 40 x 16	40	16	62	74	-	-	-	48	1	811-102029	811-106003
165-64127	OK.7 - 40 x 20	40	20	62	74	-	-	-	48	1	811-102028	811-106003
165-64128	OK.7 - 40 x 25	40	25	62	74	11,5	40	13	48	2	811-102028	-
165-64129	OK.7 - 40 x 32	40	32	62	74	11,5	40	13	48	2	811-102026	-

FAMUP RAG TYPE SHANK ER COLLET CHUCKS

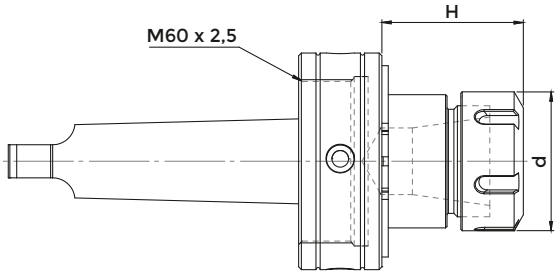

RAG

COD.	DESCRIPTION	ER	H	d	NUT 1	NUT 2	WRENCH	COLLET
4277	CM4 FAMUP RAG - ER 32	ER 32 2÷25	52	50	2420	4996	3670	0988
4280	CM4 FAMUP RAG - ER 40	ER 40 3÷32	55	63	2420	4997	3671	0821

EQUIPMENT CASES WITH REDUCED SET OF ER COLLETS

COD.	DESCRIPTION	CHUCK	CASE	WRENCH	COLLET
7531	KIT Rid CM 4 RAG - ER 32	4277	7023	3670	0988: Ø 4 - 6 - 8 10 -12 -16 - 20
7721	KIT Rid CM 4 RAG - ER 40	4280	7024	3671	0821: Ø 4 - 6 - 8 10 -12 -16 - 20 -25

EQUIPMENT CASES WITH COMPLETE SET OF ER COLLETS

COD.	DESCRIPTION	CHUCK	CASE	WRENCH	COLLET
7515	KIT CM 4 RAG - ER 32	4277	7023	3670	0988: Ø 3 ÷ 20 (18 Pinze)
7722	KIT CM 4 RAG - ER 40	4280	7024	3671	0821: Ø 4 ÷ 26 (23 Pinze)

FAMUP RAG TYPE SHANK SHELL MILL HOLDERS

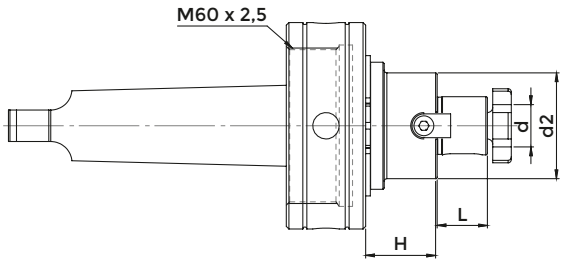

RAG

COD.	DESCRIPTION	d	H	L	d2	NUT	CROSS SCREW	KEY	WRENCH
2414	CM 4 RAG - D. 16 FISSO	16	27	17	32	2420	4985	0041	4562
2415	CM 4 RAG - D. 22 FISSO	22	27	19	40	2420	4986	0044	4563
2416	CM 4 RAG - D. 27 FISSO	27	27	21	48	2420	4987	0045	4564
2417	CM 4 RAG - D. 32 FISSO	32	27	24	58	2420	4988	0047	4565

BIMAK TYPE SHANK ER COLLET CHUCKS

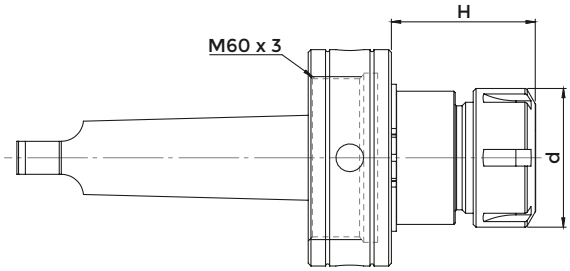

BIMAK

COD.	DESCRIPTION	ER	H	d	NUT 1	NUT 2	WRENCH	COLLET
4281	CM 4 BIMAK - ER 32	ER 32 2÷25	52	50	2423	4996	3670	0988
4354	CM 4 BIMAK - ER 40	ER 40 3÷32	55	63	2423	4997	3671	0821

EQUIPMENT CASES WITH REDUCED SET OF ER COLLETS

COD.	DESCRIPTION	CHUCK	CASE	WRENCH	COLLET
7723	KIT Rid CM 4 BIMAK-ER 32	4281	7023	3670	0988: Ø 4 - 6 - 8 10 -12 -16 - 20
7724	KIT Rid CM 4 BIMAK-ER 40	4354	7024	3671	0821: Ø 4 - 6 - 8 10 -12 -16 - 20 -25

EQUIPMENT CASES WITH COMPLETE SET OF ER COLLETS

COD.	DESCRIPTION	CHUCK	CASE	WRENCH	COLLET
7725	KIT CM 4 BIMAK-ER 32	4281	7023	3670	0988: Ø 3 ÷ 20 (18 Pinze)
7726	KIT CM 4 BIMAK-ER 40	4354	7024	3671	0821: Ø 4 ÷ 26 (23 Pinze)

BIMAK TYPE SHANK SHELL MILL HOLDERS

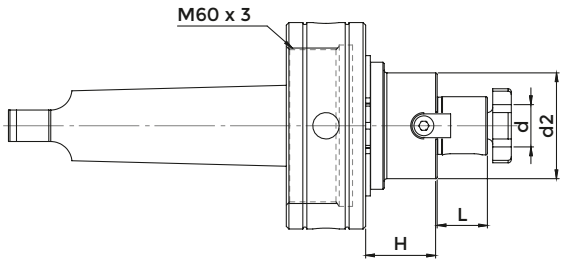

BIMAK

COD.	DESCRIPTION	d	H	L	d2	NUT	CROSS SCREW	KEY	WRENCH
2260	CM 4 BIMAK - D. 16 FISSO	16	27	17	32	2423	4985	0041	4562
2261	CM 4 BIMAK - D. 22 FISSO	22	27	19	40	2423	4986	0044	4563
2262	CM 4 BIMAK - D. 27 FISSO	27	27	21	48	2423	4987	0045	4564
2263	CM 4 BIMAK - D. 32 FISSO	32	27	24	58	2423	4988	0047	4565

BRIDGEPORT R8 COLLET

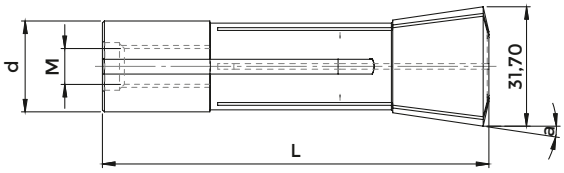

BRIDGEPORT - R8

COD.	DESCRIPTION	ER	d	d2	L	a	M	EINHEITS
0716	PINZA R8	2,0 ÷ 22	24,12	32	106	8° 35'	7/16 - 20"	369E

ER COLLET CHUCKS

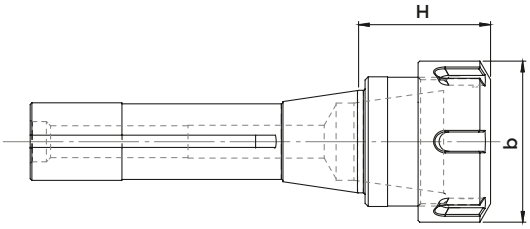

BRIDGEPORT - R8

COD.	DESCRIPTION	ER	H	d	NUT	WRENCH	COLLET
2973	PORTAPINZA R8 - ER 32	ER 32 2÷25	40	50	4996	3670	0988
2974	PORTAPINZA R8 - ER 40	ER 40 3÷32	73	63	4997	3671	0821

EQUIPMENT CASES WITH REDUCED SET OF ER COLLETS

COD.	DESCRIPTION	CHUCK	CASE	WRENCH	COLLET
7668	KIT Rid R 8 ER 32	2973	7023	3670	0988: Ø 4 - 6 - 8 10 -12 -16 - 20

EQUIPMENT CASES WITH COMPLETE SET OF ER COLLETS

COD.	DESCRIPTION	CHUCK	CASE	WRENCH	COLLET
7669	KIT R 8 ER 32	2973	7023	3670	0988: Ø 3 ÷ 20 (18 Pinze)

DRILL CHUCKS - RIGHT SPIN

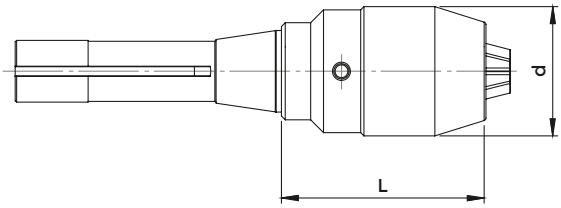

BRIDGEPORT - R8

COD.	DESCRIPTION	Ø PUNTA	d	H	WRENCH
3000	R 8 - DC 13	0,5 ÷ 13	50	81	2370

Suitable wrench included in delivery

SHANKS FOR DRILL CHUCKS DIN 238 / ISO 239 TYPE

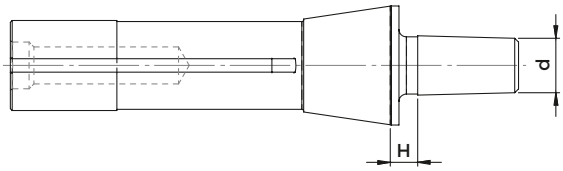

BRIDGEPORT - R8

COD.	DESCRIPTION	d	H	DIN 238
1089	R 8 - B 16	15,733	10	B 16

FACE MILL HOLDERS

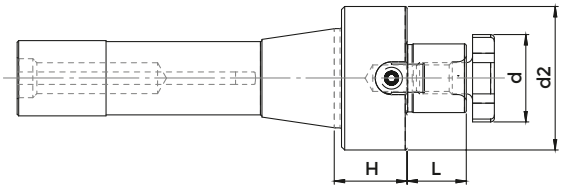

BRIDGEPORT - R8

COD.	DESCRIPTION	d	H	L	d2	CROSS SCREW	WRENCH
2978	PORTAFRESA R8 - D. 16	16	19	17	38	4985	4562
2979	PORTAFRESA R8 - D. 22	22	23	19	46	4986	4563
2980	PORTAFRESA R8 - D. 27	27	23	21	48	4987	4564
2981	PORTAFRESA R8 - D. 32	32	24	24	58	4988	4565

ADAPTERS TO MORSE TAPER

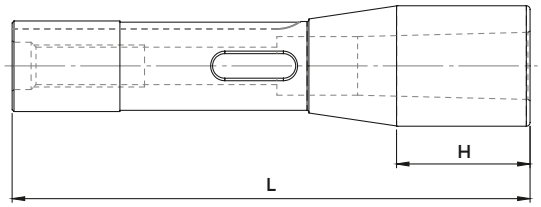

BRIDGEPORT - R8

COD.	DESCRIPTION	CM	L	H
2975	RIDUZIONE R8 - CM 1 PUNTE	1	114	22
2976	RIDUZIONE R8 - CM 2 PUNTE	2	127	35
2977	RIDUZIONE R8 - CM 3 PUNTE	3	153	48
2993	RIDUZIONE R8 - CM 4 PUNTE	4	240	61

LONGITUDINAL MOUNTING TOOLHOLDERS BORING BAR FOR TURRETS

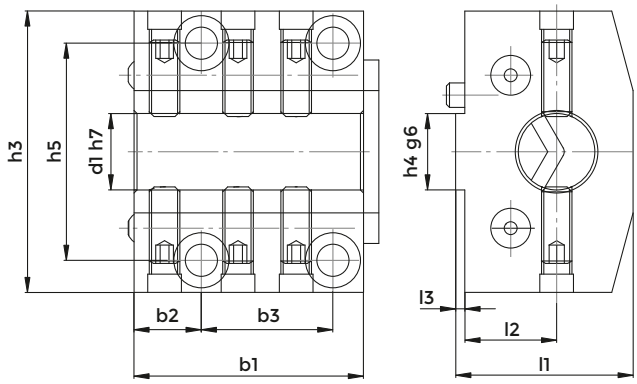

DIN 69880 - PU1

COD.	D	h3	h4	h5	b1	b2	b3	l1	l2	l3
PU1-20-25	25	74	20	57	60	17.5	34	48	25	3
PU1-20-32	32	74	20	57	60	17.5	34	48	25	3
PU1-20-40	40	74	20	57	60	17.5	34	60	32	3
PU1-25-20	20	92	25	71	75	22	43	58	30	3
PU1-25-25	25	92	25	71	75	22	43	58	30	3
PU1-25-32	32	92	25	71	75	22	43	58	30	3
PU1-25-40	40	92	25	71	75	22	43	58	30	3
PU1-25-50	50	92	25	71	75	22	43	73	38	3
PU1-32-25	25	115	32	90	95	26	57	73	35	3
PU1-32-32	32	115	32	90	95	26	57	73	35	3
PU1-32-40	40	115	32	90	95	26	57	73	35	3
PU1-32-50	50	115	32	90	95	26	57	73	35	3
PU1-32-60	60	115	32	90	95	26	57	83	40	3

ACCESSORIES

p. 722

LONGITUDINAL MOUNTING SQUARE TOOL HOLDERS FOR TURRETS

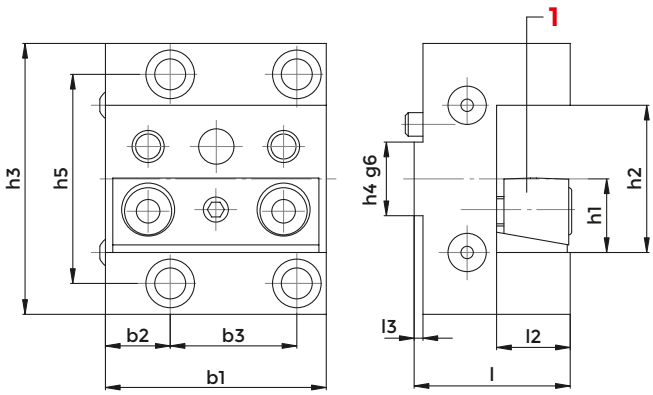

DIN 69880 - PU2

COD.	h1	h2	h3	h4	h5	b1	b2	b3	l1	L2	l3	1 LOCKING WEDGE
PU2-20-20	20	40	74	20	57	60	17.5	34	43	20	3	832-007160
PU2-25-25	25	50	92	25	71	75	22	43	53	25	3	832-007010
PU2-32-32	32	64	115	32	90	95	26	57	63	32	3	832-007170

TOOLHOLDERS FOR BIGLIA B 1000 LATHES

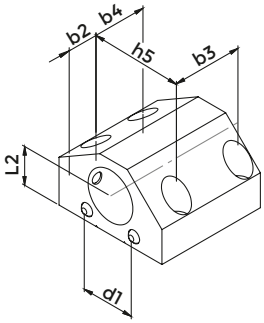

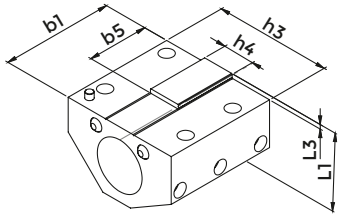

COD.	DESCRIPTION	d	h3	h4	h5	b1	b2	b3	b4	b5	L1	L2	L3
5799	BIGLIA 10.57.20.01	32	92	25	72	88	23	55	42	48	61,5	30	3,5
5800	BIGLIA 10.57.20.02	40	92	25	72	88	23	55	42	48	61,5	30	3,5

TOOLHOLDERS FOR BIGLIA B 56 AND B500 LATHES

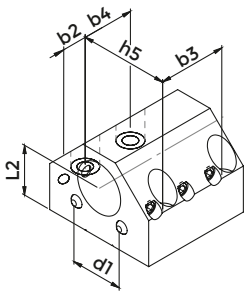

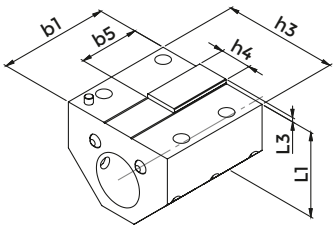

COD.	DESCRIPTION	d	h3	h4	h5	b1	b2	b3	b4	b5	L1	L2	L3
5830	BIGLIA 10.57.20.14	32	92	25	72	88	23	55	42	48	71,5	40	3,5
5831	BIGLIA 10.57.20.16	40	92	25	72	88	23	55	42	48	71,5	40	3,5

STRAIGHT SHANK FLOATING REAMER HOLDERS WITH ER COLLET

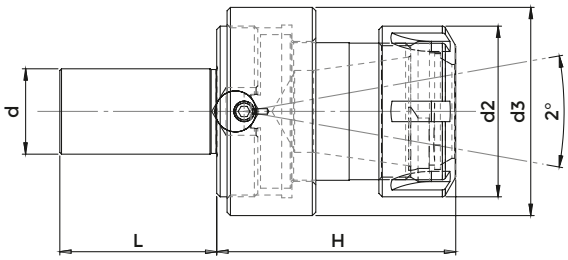

DIN 1835 A

COD.	DESCRIPTION	ER	d	d2	d3	H	L	NUT	WRENCH	COLLET
1152	d 16 RM - ER 16	ER 16 1÷12	16	32	40	50	46	4993	3698	0364
1173	d 16 RM - ER 20	ER 20 1÷15	16	35	40	55	46	4994	3699	0787
1176	d 19,05 RM - ER 16	ER 16 1÷12	19,05	32	40	50	46	4993	3698	0364
1340	d 19,05 RM - ER 20	ER 20 1÷15	19,05	35	40	55	46	4994	3699	0787
1227	d 20 RM - ER 16	ER 16 1÷12	20	32	40	50	46	4993	3698	0364
1573	d 20 RM - ER 20	ER 20 1÷15	20	35	40	55	46	4994	3699	0787
1237	d 20 RM - ER 25	ER 25 1÷20	20	42	61	58	46	4995	3669	0996
1241	d 25 RM - ER 20	ER 20 1÷15	25	35	40	55	46	4994	3699	0787
1242	d 25 RM - ER 25	ER 25 1÷20	25	42	61	58	46	4995	3669	0996
1341	d 25 RM - ER 32	ER 32 2÷25	25	50	61	70	46	4996	3670	0988
1342	d 25,4 RM - ER 32	ER 32 2÷25	25,4	50	61	70	46	4996	3670	0988
1895	d 32 RM - ER 32	ER 32 2÷25	32	50	61	70	50	4996	3670	0988

ACCESSORIES

p. 649

p. 631

p. 653

STRAIGHT SHANK FLOATING REAMER HOLDERS WITH ER COLLET

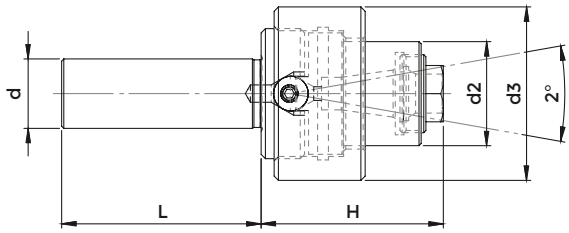

DIN 1835 A

COD.	DESCRIPTION	ER	d	d2	d3	H	L	NUT	WRENCH	COLLET
1141	d 16 RM - ER 11	ER 11 1÷ 8	16	24	40	42	46	2601	3169	5573
1213	d 20 RM - ER 11	ER 11 1÷ 8	20	24	40	42	46	2601	3169	5573

ACCESSORIES

p. 652

p. 631

p. 652

FIXED THREADING DIE HOLDERS

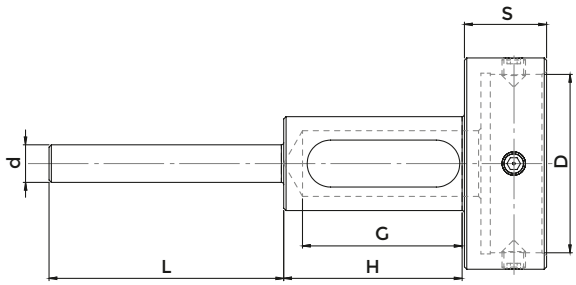

FRONT FIXING - LATERAL FIXING

COD.	DESCRIPTION	D	S	d	H	L	G
1093	P/FILIERA FISSO con bloccaggio universale - D.16x5	16	5	8	40	40	34
1075	P/FILIERA FISSO con bloccaggio universale - D.20x5	20	5	8	43	45	40
1095	P/FILIERA FISSO con bloccaggio universale - D.20x7	20	7	8	43	45	38
1103	P/FILIERA FISSO con bloccaggio universale - D.25x9	25	9	8	50	45	45
1105	P/FILIERA FISSO con bloccaggio universale - D.30x11	30	11	8	50	45	45
1125	P/FILIERA FISSO con bloccaggio universale - D.38x10	38	10	8	56	50	51
1107	P/FILIERA FISSO con bloccaggio universale - D.38x14	38	14	8	56	50	52

FIXED THREADING DIE HOLDERS

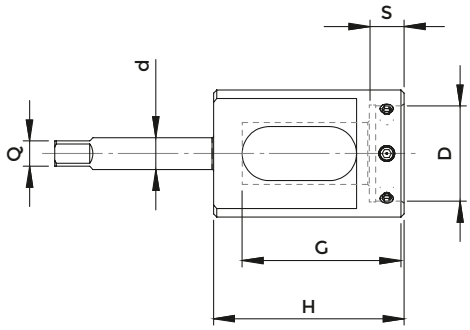

OVERSIZE

COD.	DESCRIPTION	D	S	d	Q	H	G
2540	P/FILIERA MAGGIORATO - D.20x7	20	7	9	7	60	49
2536	P/FILIERA MAGGIORATO - D.25x9	25	9	9	7	60	51
2537	P/FILIERA MAGGIORATO - D.30x11	30	11	10	8	60	51
2538	P/FILIERA MAGGIORATO - D.38x10	38	10	10	8	60	54
2544	P/FILIERA MAGGIORATO - D.38x14	38	14	12	9	60	54
2539	P/FILIERA MAGGIORATO - D.45x14	45	14	12	9	66	59
2558	P/FILIERA MAGGIORATO - D.45x18	45	18	14	11	66	59

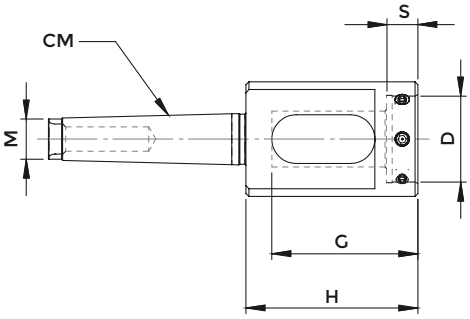

MORSE TAPER SHANK

COD.	DESCRIPTION	D	S	CM	M	H	G
2727	P/FILIERA con attacco CM.2 A - D.16x5	16	5	2	M 10	60	51
2728	P/FILIERA con attacco CM.2 A - D.20x7	20	7	2	M 10	60	49
2729	P/FILIERA con attacco CM.2 A - D.20x7	25	9	2	M 10	60	51
2731	P/FILIERA con attacco CM.2 A - D.30x11	30	11	2	M 10	60	51
2735	P/FILIERA con attacco CM.2 A - D.38x10	38	10	2	M 10	60	54
2767	P/FILIERA con attacco CM.2 A - D.38x14	38	14	2	M 10	60	54
2776	P/FILIERA con attacco CM.2 A - D.45x14	45	14	2	M 10	66	59
2786	P/FILIERA con attacco CM.2 A - D.45x18	45	18	2	M 10	66	59

READY, ALWAYS.

CONTROL PINS

CONTROL PINS

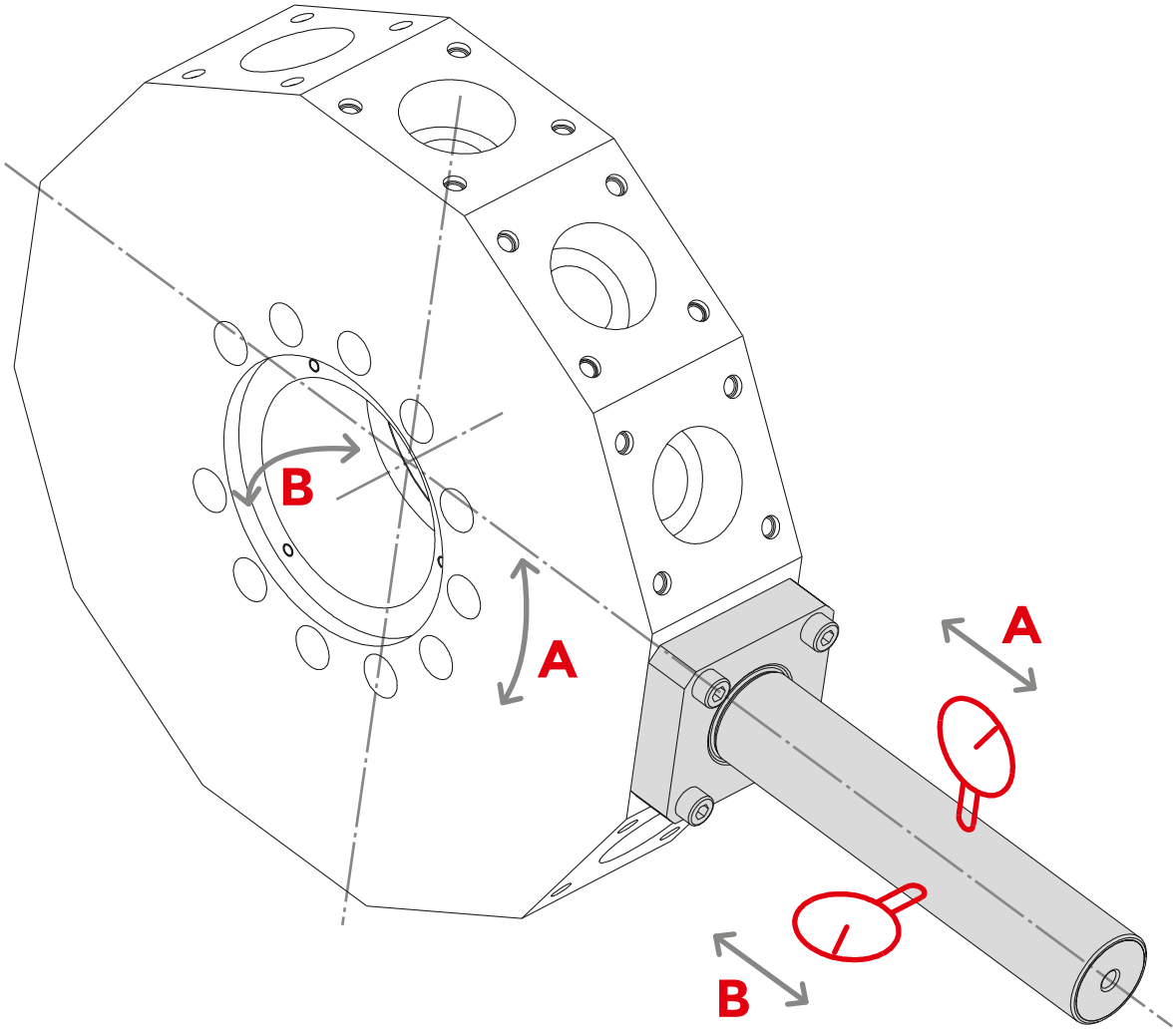

- Control pin for CNC lathes turret with test certificate included
- Radial run-out, shank precision, contact face and control cylinder within 0,003 micron
- Application: after having set it up in any turret station like a normal tool holder, you can check its orthogonality by moving the dial indicator along the X axis of the machine

TECHNICAL FEATURES

CONE TOLERANCE:
According to the class AT3.

PIN TOLERANCE:

DIAMETER	RUNOUT ACCURACY	CILINDRICITY
+/- 0.05	0.005	0.003

CONSTRUCTIVE FEATURES:
- Manufactured with casehardening steel
- Casehardened with depth 0,6 - 0,8 mm
- Hardened - Tempered - Black oxide
- Hardness HRC 58, Strenght 800-1000 N/mm^2
- External grinding finish
- Tested 100% with vertified measuring instruments

CONTROL PINS

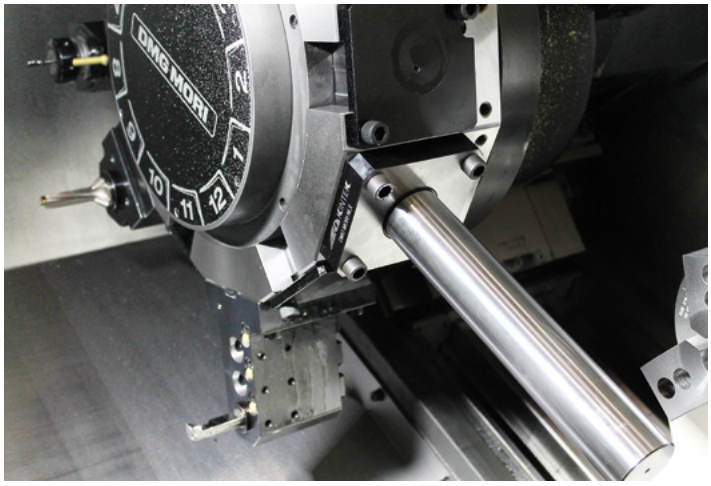

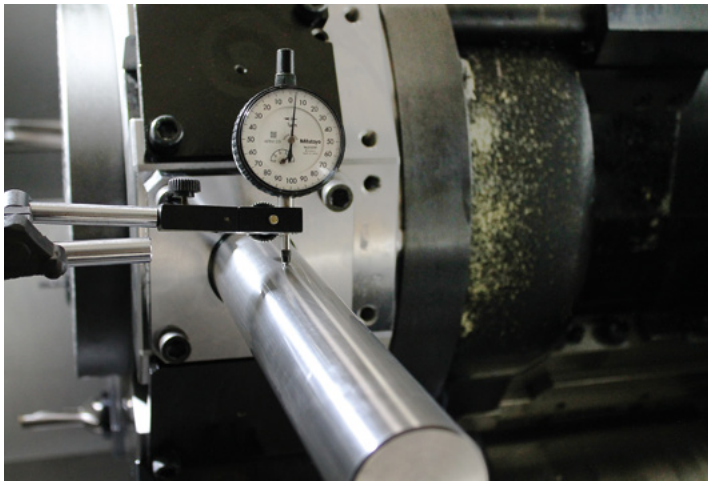

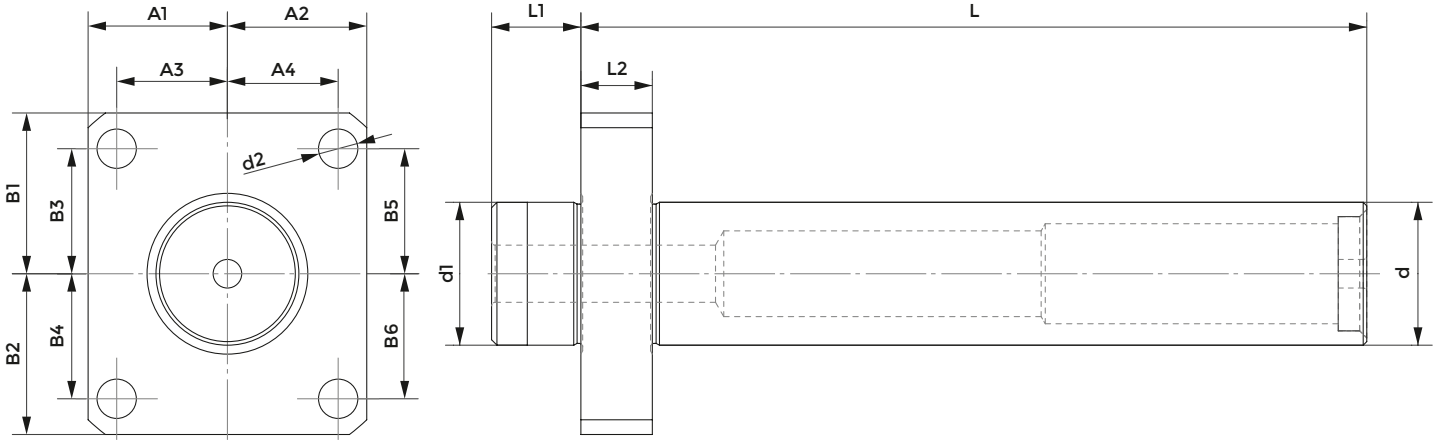

DGM MORI CTX310ECO-BMT / NZ1500 / NZ2000

COD.	d	L	d1	d2	L1	L2	A1	A2	A3	A4	B1	B2	B3	B4	B5	B6
137-00193	40	220	40	11	25	20	39	39	31	31	45	45	35	35	35	35

DGM MORI NLX1500-NLX2000 / NLX2500-NLX3000 / NL2000 (S)MC-2500 (S)MC / NL3000MC (12 STATIONS)

COD.	d	L	d1	d2	L1	L2	A1	A2	A3	A4	B1	B2	B3	B4	B5	B6
137-00194	50	300	60	13	30	25	54	54	42	42	59	59	47	47	47	47

Supplied in suitcase with test certificate

OKUMA LB2000 EX (M, MY) / LB2500 EX (M) / LB3000 EX (M, MY) / LB3000 EX (MW, MYW)

COD.	d	L	d1	d2	L1	L2	A1	A2	A3	A4	B1	B2	B3	B4	B5	B6
137-00195	50	300	60	13	30	25	47,5	47,5	36,5	36,5	50	50	26	39	39	26

OKUMA LB4000 EX (M, MY)

COD.	d	L	d1	d2	L1	L2	A1	A2	A3	A4	B1	B2	B3	B4	B5	B6
137-00196	50	300	60	13	30	25	50	50	39	39	55	55	40	40	40	40

DOOSAN LYNX 220LM

COD.	d	L	d1	d2	L1	L2	A1	A2	A3	A4	B1	B2	B3	B4	B5	B6
137-00197	40	220	45	9	25	20	37,5	37,5	29	29	40	40	29	29	29	29

DOOSAN PUMA230-240M-MS-280LM-1500-2000-2500M/MS/S/SY2100 SERIE-TT1500-TT1800MS/SY TL2000-2500LM-MX1600/2100TS / LYNX 300M

COD.	d	L	d1	d2	L1	L2	A1	A2	A3	A4	B1	B2	B3	B4	B5	B6
137-00198	40	220	55	11	30	20	42,5	42,5	32	32	50	50	32	32	32	32

DOOSAN PUMA300M/MS-V400M-TT2000SY-TT2500SY / TT2500MS-2600/3100 SERIE MX2000ST-MX2500T/ST/LST-VT450/TM / INVERTURN 3000M

COD.	d	L	d1	d2	L1	L2	A1	A2	A3	A4	B1	B2	B3	B4	B5	B6
137-00199	50	300	65	13	30	25	47,5	47,5	36,5	36,5	55	55	35	35	35	35

DOOSAN PUMA400-480M/LM/XLM-VT 750M/TM

COD.	d	L	d1	d2	L1	L2	A1	A2	A3	A4	B1	B2	B3	B4	B5	B6
137-00200	50	300	75	13	30	25	56	56	45	45	57,5	57,5	45	45	45	45

MAZAK QTS200M

COD.	d	L	d1	d2	L1	L2	A1	A2	A3	A4	B1	B2	B3	B4	B5	B6
137-00201	40	225	68	9	25	25	42	42	34	34	55	75	45	65	45	65

MAZAK QTS300M

COD.	d	L	d1	d2	L1	L2	A1	A2	A3	A4	B1	B2	B3	B4	B5	B6
137-00202	50	325	80	11	27	25	50	50	36	36	74,5	100	60	85	60	85

BIGLIA B301/445/470/501(Y-S)/510/545/550/565/650/658/1200/446/465/745/765-B750/1250 16 ST BV210/315

COD.	d	L	d1	d2	L1	L2	A1	A2	A3	A4	B1	B2	B3	B4	B5	B6
137-00209	40	220	55	11	30	20	42	42	31,5	31,5	45	45	32,5	32,5	32,5	32,5

Supplied in suitcase with test certificate

POSITIONING CONTROL OF THE TOOL CHANGER ARM

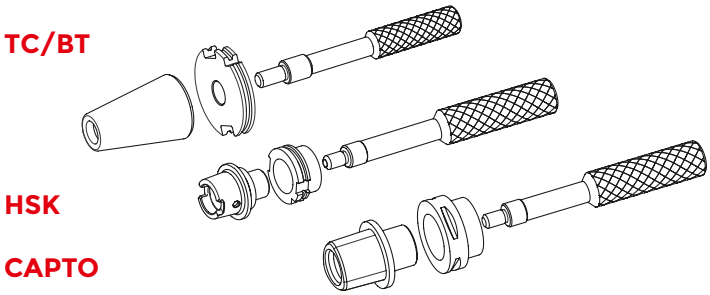

COD.	CONE
KIT.PRUEFD-TC40	TC40
KIT.PRUEFD-TC50	TC50
KIT.PRUEFD-BT30	BT30
KIT.PRUEFD-BT40	BT40
KIT.PRUEFD-BT50	BT50
KIT.PRUEFD-HSK40	HSK40A
KIT.PRUEFD-HSK63	HSK63A
KIT.PRUEFD-H100	HSK100A
KIT.PRUEFD-C4	C40
KIT.PRUEFD-C5	C50
KIT.PRUEFD-C6	C63
KIT.PRUEFD-C8	C80

1. After assembling the usual pull stud, insert the cone into the spindle manually
2. Set up the flange into the tool changer arm and go closer to the spindle
3. After positioning, try to insert the double-diameter control pin between the two pieces. Adjust the arm accordingly until you get the perfect coaxiality so that the control bar enters the flange and the cone holes with no interference

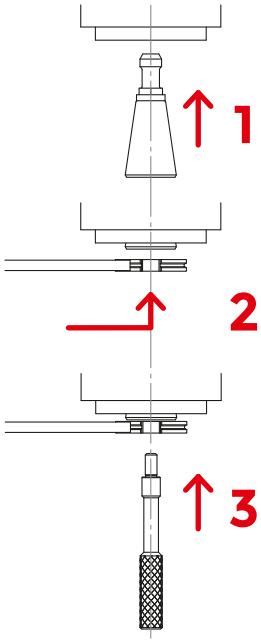

KIT CONTROL PIN+POSITIONING CONTROL OF THE TOOL CHANGER ARM

COD.	CONE	PIN
KIT-TC40-CP-PR	TC40	TC40H300D40BC
KIT-BT40-CP-PR	BT40	BT40H300D40BC
KIT-HSK63-CP-PR	HSK63	HSK63AH380D40C
KIT-C63-CP-PR	C63	C63H346D40BC

CONTROL PINS

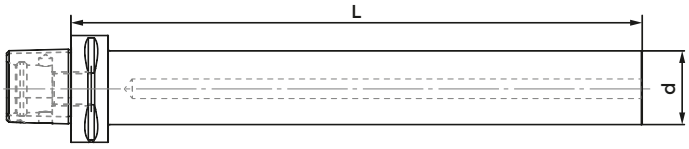

DIN26623-1

COD.	CAPTO	d	L
C40H180D25BC	C40	25	180
C40H300D35BC	C40	35	300
C50H300D40BC	C50	40	300
C63H180D40BC	C63	40	180
C63H346D40BC	C63	40	346
C80H346D40BC	C80	40	346

Supplied in suitcase with test certificate

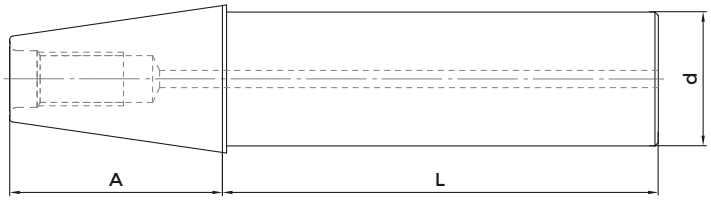

DIN69871A - DIN2080 - MAS403BT

COD.	DESCRIPTION	ISO	d	L	A
217-71506	TC30/BT30H200D30BC	30	30	200	48,4
217-71515	BT40H200D40BC	40	40	200	65,4
217-71507	BT40H300D40BC	40	40	300	65,4
217-71228	TC40H200D40BC	40	40	200	68,4
217-71201	TC40H300D40BC	40	40	300	68,4
217-71224	TC45H300D50	45	45	300	82,7
217-71230	TC50BT50H200D50BC	50	50	200	101,75
217-71202	TC50/BT50H350D50BC	50	50	350	101,75
217-71209	TC60/BT60H300D63BC	60	63	300	161,8

Supplied in suitcase with test certificate

CONTROL PINS

BT

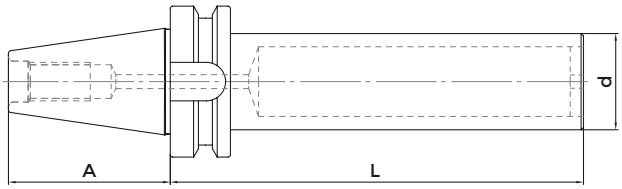

TC

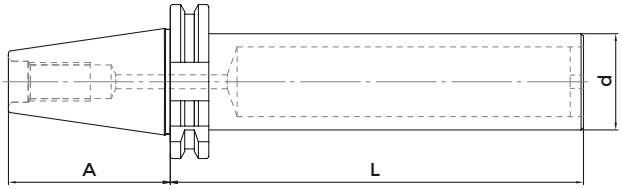

DIN 69871A - MAS403BT (DOUBLE CONTACT)

COD.	DESCRIPTION	ISO	d	L	A
217-77201	BT40H200D40BCDK	40	40	200	66,4
217-77204	BT40H300D40BCDK	40	40	300	66,4
217-77205	BT50H350D50BCDK	50	50	350	103,3
217-77103	TC40H200D40BCDK	40	40	200	69,4
217-77101	TC40H300D40BCDK	40	40	300	69,4
217-77102	TC50H350D50BCDK	50	50	350	103,25

Supplied in suitcase with test certificate

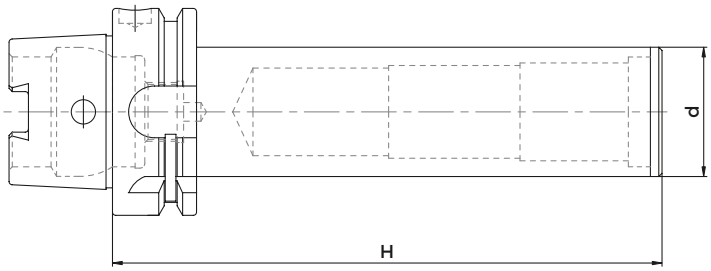

DIN69893A

COD.	DESCRIPTION	HSK	d	H
217-71720	HSK32AH176D25C	32	25	176
217-71721	HSK40AH180D25BC	40	25	180
217-71702	HSK40AH300D32C	40	32	300
217-71722	HSK50AH236D32C	50	32	236
217-71703	HSK50AH300D40C	50	40	300
217-71735	HSK63AH180D40C	63	40	180
217-71724	HSK63AH346D40C	63	40	346
217-71704	HSK63AH380D40C	63	40	380
217-71911	HSK63CH160D40C	63	40	160
217-71736	HSK100AH180D40C	100	40	180
217-71705	HSK100AH350D40C	100	40	350
217-71729	HSK125AH350D50BC	125	50	350

Supplied in suitcase with test certificate

CONTROL PINS

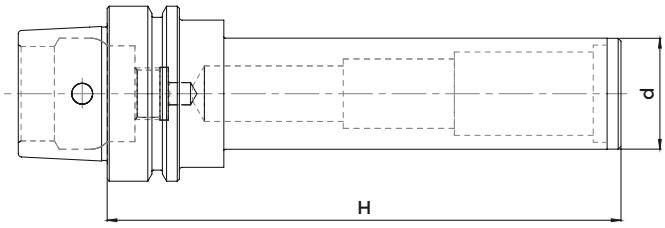

DIN 69893+6 F

COD.	DESCRIPTION	HSK	d	H
217-77402	HSK63FH380D40C	63	40	380

Supplied in suitcase with test certificate

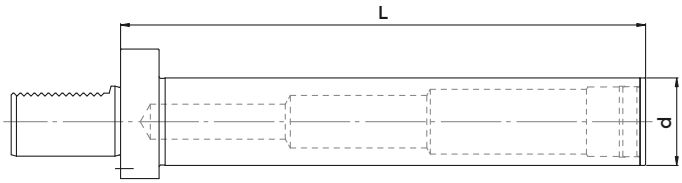

DIN 69880

COD.	DESCRIPTION	VDI	d	L
118-52501	VDI25L220D30BC	25	30	220
118-53002	VDI30L230D40BC	30	40	230
118-54003	VDI40L300D50BC	40	50	300
118-55002	VDI50L300D50BC	50	50	300
118-56002	VDI60L300D60BC	60	60	300

Supplied in suitcase with test certificate

CLAMPING FINGERS FOR TOOL MAGAZINES

TYPE 1

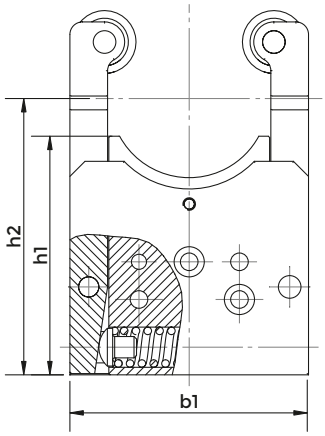

TYPE 2

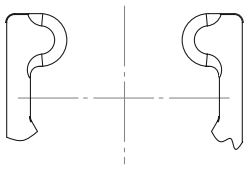

COD.	Type	b1	h1	h2	type	Max Kg Vertical	Max kg Upper Position	Max kg Lover Position	Max Tool's lenght (mm)	Spring Type	Spring Code
832-018030	HSK63A	95	95	110	1	14,6	7,8	4,1	250	A	MOLLA16X76CM
832-018470	HSK63A	95	95	110	1	21	11,2	5,9	250	B	MOLLA16X76CP
832-018020	HSK100A	135	118	139	2	40	20,5	11	400	A	MOLLA20X102CM
832-018480	HSK100A	135	118	139	2	80	50	27	400	B	MOLLA20X102CP
832-007940	C6	95	91	110	1	15,6	8,3	4,4	250	A	MOLLA16X76CM
832-018490	C6	95	91	110	1	22,3	11,9	6,3	250	B	MOLLA16X76CP
832-018050	C8	105	85	110	1	18,2	10,5	5,1	250	A	MOLLA16X89CM
832-018500	C8	105	85	110	1	29	16,7	8,2	250	B	MOLLA16X89CP
832-007980	KM63	95	100	110	2	14,4	7,7	4	250	A	MOLLA16X76CM
832-018510	KM63	95	100	110	2	20,5	10,9	5,8	250	B	MOLLA16X76CP
832-018520	SK40	95	95	110	1	14,6	7,8	4,1	250	A	MOLLA16X76CM
832-018530	SK40	95	95	110	1	21	11,2	5,9	250	B	MOLLA16X76CP
832-018360	SK50	135	118	139	2	25	13	7	400	C	MOLLA20X102CL
832-018210	SK50	135	118	139	2	40	27	15	400	A	MOLLA20X102CM
832-018540	BT40	95	95	110	1	14,6	7,8	4,1	250	A	MOLLA16X76CM
832-018550	BT40	95	95	110	1	21	11,2	5,9	250	B	MOLLA16X76CP
832-018370	BT50	135	118	139	2	25	13	7	400	C	MOLLA20X102CL
832-018200	BT50	135	118	139	2	61	31	17	400	A	MOLLA20X102CM

NOTES:
A : Medium Load Spring
B : Heavy Load Spring
C : Light Load Spring

CLAMPING FINGERS FOR TOOL MAGAZINES

Thanks to our constant and exhaustive co-operation with the most famous machine tool makers we developed a very good experience into the manufacturing of high precision clamping fingers for tool magazines.
Our range includes clampers for the most popular attachements: ISO CONES, HSK, but of course we are open to any new version, according to the customer's drawing.

READY, ALWAYS.

Design and printing

apvd communication

www.apvd.it

KINTEK
READY, ALWAYS.

Kintek S.p.A.
Società per Azioni
Unipersonale
Via Goretta 88/G
10079 Mappano (TO)

Tel. 011/9968065
Fax 011/9910525
Cod. Fisc. e Partita IVA
08746040016

Cap. Soc. € 179.850,00
R.E.A 997323
R.I. Uff. To 08746040016
Cod. Univoco M5UXCR1